Brother Color Laser Printer
SERVICE MANUAL

MODEL: HL-L8250CDN/ L8350CDW/L8350CDWT/ L9200CDW/L9200CDWT

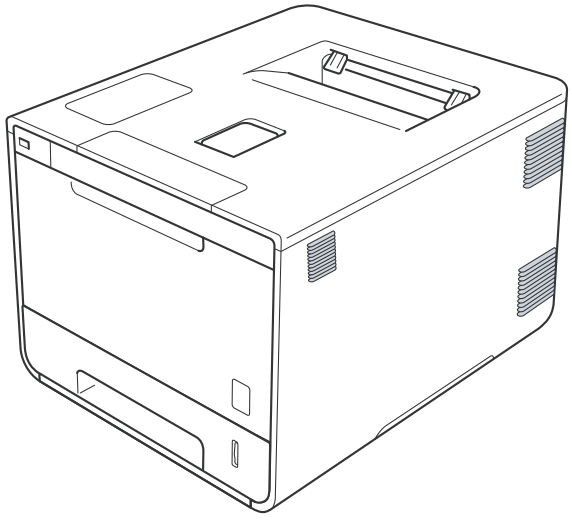

Read this manual thoroughly before maintenance work.
Keep this manual in a convenient place for quick and easy reference at all times.

January 2014
SM-PRN094
84E5*
(5)

Confidential

TRADEMARKS

Brother is a trademark of Brother Industries, Ltd.

Microsoft, Windows, Windows NT, Windows Vista, Windows Server, Internet Explorer and Outlook are either registered trademarks or trademarks of Microsoft Corporation in the United States and/or other countries.

Apple, Macintosh, Mac OS, iPad, iPhone, iOS, iPod touch and OS X are trademarks of Apple Inc., registered in the United States and other countries.

Linux is the registered trademark of Linus Torvalds in the U.S. and other countries.

UNIX is a registered trademark of The Open Group in the United States and other countries.

Intel is a trademark of Intel Corporation in the U.S. and/or other countries.

Adobe, Illustrator, PostScript and PostScript 3 are either registered trademarks or trademarks of Adobe Systems Incorporated in the United States and/or other countries.

Wi-Fi, Wi-Fi Alliance and Wi-Fi Protected Access are registered trademarks of the Wi-Fi Alliance.

WPA, WPA2, Wi-Fi Protected Setup, Wi-Fi Protected Setup logo and Wi-Fi Direct are trademarks of the Wi-Fi Alliance.

FLICKR is a registered trademark of Yahoo! Inc.

AOSS is a trademark of Buffalo Inc.

Android, Google Cloud Print, Google Drive, Google Play and Picasa Web Albums are trademarks of Google Inc. Use of this trademark is subject to Google Permissions.

Nuance, the Nuance logo, PaperPort and ScanSoft are trademarks or registered trademarks of Nuance Communications, Inc. or its affiliates in the United States and/or other countries.

Firefox is a registered trademark of the Mozilla Foundation.

EVERNOTE and the Evernote Elephant logo are trademarks of Evernote Corporation and used under a license.

Each company whose software title is mentioned in this manual has a Software License Agreement specific to its proprietary programs.

Any trade names and product names of companies appearing on Brother products, related documents and any other materials are all trademarks or registered trademarks of those respective companies.

OPEN SOURCE LICENSING REMARKS

This product includes open-source software.

Please visit the Brother Solutions Center at http://solutions.brother.com/ to view the Open Source Licensing Remarks and Copyright information.

COPYRIGHT AND LICENSE

©2014 Brother Industries, Ltd. All rights reserved.

This product includes software developed by the following vendors:

©1983-1998 PACIFIC SOFTWORKS, INC. ALL RIGHTS RESERVED.

©2008 Devicescape Software, Inc. All rights reserved.

This product includes the “KASAGO TCP/IP” software developed by ZUKEN ELMIC, Inc.

OTHER INFORMATION

FlashFX® is a registered trademark of Datalight, Inc.

FlashFX® Copyright 1998-2010 Datalight, Inc.

U.S.Patent Office 5,860,082/6,260,156

FlashFX® Pro™ is a trademark of Datalight, Inc.

Reliance™ is a trademark of Datalight, Inc.

Datalight® is a registered trademark of Datalight, Inc.

Copyright 1989-2010 Datalight, Inc., All Rights Reserved

CONTENTS

REGULATION I

SAFETY INFORMATION VI

CHAPTER 1 SUPPLEMENTAL SPECIFICATIONS

1.1 General 1-1
1.2 Network Connectivity 1-2
1.3 Service Information 1-2
1.4 Supplies 1-3

CHAPTER 2 ERROR INDICATION AND TROUBLESHOOTING

1. INTRODUCTION 2-1
1.1 Precautions 2-1
1.2 Checks before Commencing Troubleshooting 2-3

2. OVERVIEW 2-5
2.1 Cross-section Drawing 2-5
2.2 Paper Feeding 2-6
2.3 Operation of Each Part 2-7
2.4 Block Diagram 2-8
2.5 Main Components 2-9

3. ERROR INDICATIONS 2-10
3.1 Error Codes 2-10
3.2 Error Message 2-20

4. TROUBLESHOOTING 2-39
4.1 Error Cause and Remedy 2-39
4.2 Troubleshooting for Paper Feeding Problems 2-79
4.2.1 No paper feeding from paper tray 1 2-79
4.2.2 No paper feeding from T2 paper tray unit 2-80
4.2.3 No paper feeding from MP tray 2-81
4.2.4 Multiple sheets of paper are fed 2-82
4.2.5 Paper becomes wrinkled 2-82
4.2.6 Paper is fed at an angle 2-82
4.2.7 Paper curls 2-83

4.2.8 Unable to perform 2-sided printing 2-83
4.2.9 Paper jam 2-84
4.3 Troubleshooting for Image Defects 2-88
4.3.1 Image defect examples 2-88
4.3.2 Troubleshooting image defect 2-89
4.4 Troubleshooting for Software Problems 2-106
4.4.1 Unable to receive data 2-106
4.5 Troubleshooting for Network Problems 2-107
4.5.1 Cannot make a print through network connection 2-107
4.6 Troubleshooting for Control Panel Problems 2-108
4.6.1 Nothing is displayed on the LCD/LED 2-108
4.6.2 Unable to perform panel operation 2-109
4.7 Troubleshooting for Toner Cartridge and Drum Unit Problems 2-110
4.7.1 New toner not detected 2-110
4.7.2 Toner cartridge not detected 2-110
4.7.3 Toner replacement message displayed on LCD is not cleared 2-110
4.7.4 Drum error 2-111
4.7.5 Drum replacement message displayed on LCD is not cleared 2-111
4.8 Troubleshooting for Fuser Unit Problems 2-112
4.8.1 Fuser unit failure 2-112
4.9 Troubleshooting for Laser Unit Problems 2-112
4.9.1 Laser unit failure 2-112
4.10 Troubleshooting for PCB Problems 2-113
4.10.1 Main PCB failure 2-113
4.10.2 Full memory 2-113
4.10.3 Problem of print restriction/ID authentication 2-113
4.11 Troubleshooting for Other Problems 2-114
4.11.1 Cannot make print 2-114
4.11.2 Problem of USB direct interface 2-114
4.11.3 Cannot update firmware 2-114

CHAPTER 3 DISASSEMBLY AND ASSEMBLY

1. SAFETY PRECAUTIONS 3-1
2. PACKING 3-2
3. SCREW CATALOGUE 3-3
4. SCREW TORQUE LIST 3-4

5. LUBRICATION 3-6
6. OVERVIEW OF GEARS 3-7
7. HARNESS ROUTING 3-8
8. DISASSEMBLY FLOW 3-17
9. DISASSEMBLY PROCEDURE 3-18
9.1 Lift Gear 46/Gear Z19M10 3-19
9.2 Support Flap 3-20
9.3 Back Cover/Back Cover Stopper Arm L/Back Cover Stopper Arm R 3-21
9.4 Fuser Cover ASSY 3-24
9.5 Cleaner Pinch Roller S ASSY 3-26
9.6 Fuser Unit 3-28
9.7 Side Cover L ASSY 3-31
9.8 Side Cover R 3-34
9.9 Duplex Tray 3-37
9.10 MP Cover ASSY/MP Paper Guide ASSY 3-38
9.11 MP Link L/MP Link R 3-41
9.12 Front Cover 3-42
9.13 Front Cover Release Button/Front Cover Release Button Spring 3-44
9.14 Top Cover ASSY 3-46
9.15 Wireless LAN PCB 3-49
9.16 Panel 3-50
9.16.1 Panel control PCB ASSY 3-50
9.16.1.1 Panel case ASSY/Key PCB flat cable/LCD panel ASSY 3-52
9.16.2 Panel cover ASSY 3-58
9.16.2.1 Panel PCB ASSY 3-59
9.16.2.2 Rubber key printed ASSY 3-60
9.16.2.3 LCD 3-61
9.17 USB Host Relay PCB ASSY/USB Cover Printed ASSY 3-62
9.18 Main PCB ASSY 3-63
9.19 Laser Unit Flat Cable/Laser Unit 3-65
9.20 Front Cover Sensor 3-69
9.21 Process Drive Unit/Fuser Drive Gear Z25 3-70
9.22 Main Drive Unit 3-76
9.23 Develop Release Drive Unit 3-77
9.24 Develop Release Sensor PCB ASSY 3-78
9.25 Toner/New Sensor PCB ASSY 3-79
9.26 Fuser Fan 3-80

9.27 Paper Eject ASSY 3-81
9.28 Toner Filter ASSY 3-82
9.29 Paper Eject Origin Sensor 3-83
9.30 Back Cover Sensor ASSY 3-85
9.31 Eject Sensor PCB ASSY 3-86
9.32 Registration Mark Sensor Unit 3-87
9.33 Power Fan 3-88
9.34 Low-voltage Power Supply PCB Unit 3-89
9.35 MP Paper Empty Actuator A ASSY/MP Paper Empty Actuator B 3-92
9.36 MP Paper Empty/Registration Front Sensor PCB ASSY 3-98
9.37 Paper Feed Unit/Joint Pin 3-100
9.38 Registration Front/Rear Sensor PCB ASSY 3-104
9.39 T1 Paper Feed Sensor PCB ASSY 3-105
9.40 High-voltage Power Supply PCB ASSY 3-108
9.41 Air Duct Film 3-111
9.42 Blower 3-112

10. DISASSEMBLY PROCEDURE (LT-320CL/LT-325CL) 3-113

10.1 T2 Paper Tray Unit 3-113
10.2 T2 Cover Rear 3-114
10.3 T2 Cover Left 3-115
10.4 T2 Cover Right 3-116
10.5 T2 Relay PCB ASSY 3-117
10.6 T2 Paper Feed Frame Unit/T2 Edge Actuator 3-118

CHAPTER 4 ADJUSTMENTS AND UPDATING OF SETTINGS, REQUIRED AFTER PARTS REPLACEMENT

1. IF YOU REPLACE THE MAIN PCB ASSY 4-1

1.1 Installing the Firmware (Sub Firmware, Panel Firmware, Main Firmware, and High-voltage Firmware) 4-2
1.1.1 Checking firmware version 4-2
1.1.2 Installing the firmware 4-3
1.2 Initializing the EEPROM of the Main PCB ASSY (Function code 01) 4-4
1.3 Restore Machine Information (Function code 41) 4-4
1.4 Setting by Country (Function code 74) 4-4
1.5 Setting the Serial Number (Function code 80) 4-5
1.6 Motor Reset (Function code 57) 4-5
1.7 Continuous Adjustments of Density and Registration Sensor (Function code 73) 4-5
1.8 Adjustment of Touch Panel (Function code 61) 4-5

2. IF YOU REPLACE THE REGISTRATION MARK SENSOR UNIT 4-6

2.1 Continuous Adjustments of Density and Registration Sensor (Function code 73) 4-6

3. IF YOU REPLACE THE LOW-VOLTAGE POWER SUPPLY PCB UNIT 4-7

3.1 Reset of Irregular Power Supply Detection Counter of Low-Voltage Power Supply PCB (Reset Counters for Parts (Function code 88)) 4-7

4. IF YOU REPLACE THE PROCESS DRIVE UNIT.....4-8

4.1 Motor Reset (Function code 57) 4-8

5. IF YOU REPLACE THE HIGH-VOLTAGE POWER SUPPLY PCB ASSY 4-9

5.1 Installing the Firmware (Sub Firmware, Panel Firmware, Main Firmware, and High-voltage Firmware)..... 4-10

5.1.1 Checking firmware version 4-10

5.1.2 Installing the firmware..... 4-10

5.2 Continuous Adjustments of Density and Registration Sensor (Function code 73)..... 4-10

6. IF YOU REPLACE THE TOP COVER ASSY, LCD PANEL ASSY OR PANEL CONTROL PCB ASSY (MODEL WITH TOUCH PANEL ONLY) 4-11

6.1 Installing the Firmware..... 4-11

6.1.1 Checking firmware version 4-11

6.1.2 Installing the firmware..... 4-11

6.2 Adjustment of Touch Panel (Function code 61)..... 4-12

6.3 Operational Check of LCD (Function code 12)..... 4-12

7. IF YOU REPLACE THE TOP COVER ASSY, PANEL COVER ASSY, PANEL PCB ASSY, LCD (MODEL WITHOUT TOUCH PANEL ONLY).....4-13

7.1 Operational Check of LCD (Function code 12)..... 4-13

7.2 Operational Check of Control Panel Key (Function code 13)..... 4-13

8. IF YOU REPLACE THE LASER UNIT 4-14

8.1 Continuous Adjustments of Density and Registration Sensor (Function code 73)..... 4-14

8.2 Counter Reset of Laser Unit (Reset Counters for Parts (Function code 88)) 4-14

9. IF YOU REPLACE THE FUSER UNIT/ PF KIT 1, 2, AND MP 4-15

9.1 Counter Reset of Fuser Unit or PF Kit 1, 2, and MP (Reset Counters for Parts (Function code 88))..... 4-15

CHAPTER 5 SERVICE FUNCTIONS

1. MAINTENANCE MODE.....5-1

1.1 How to Enter the Maintenance Mode 5-1
1.1.1 How to Enter the Maintenance Mode Exclusive to Service Personnel 5-1
1.1.2 How to Enter the End User-accessible Maintenance Mode 5-2
1.2 List of Maintenance-mode Functions 5-3
1.3 Detailed Description of Maintenance-mode Functions 5-4
1.3.1 EEPROM parameter initialization (Function code 01, 91) 5-4
1.3.2 Monochrome image quality test pattern (Function code 09) 5-5
1.3.3 Worker switch (WSW) setting and printout (Function code 10, 11) 5-6
1.3.4 Operational check of LCD (Function code 12) 5-8
1.3.5 Operational check of control panel key (Function code 13) 5-10
1.3.6 Software version check (Function code 25) 5-11
1.3.7 “One Push Demo” setting (Function code 28) 5-12
1.3.8 Operational check of sensors (Function code 32) 5-13
1.3.9 LAN connection status display (Function code 33) 5-16
1.3.10 EEPROM Dump Print (Function code 40) 5-17
1.3.11 Backup of machine information (Function code 41) 5-18
1.3.12 Changing return value of USB No./Switching Dither Pattern/ Switching of ON/OFF of DirectPrint Color mode-Improve Gray Color/ Switching of timing to execute Auto Registration/ Adjusting left-end print start position on second side in duplex printing/ Change of the transfer current setting/Change of ghost reduction setting (Function code 45) 5-21
1.3.13 Motor reset (Function code 57) 5-28
1.3.14 Adjustment of touch panel (Function code 61) (Model with touch panel only) 5-29
1.3.15 Adjustment of color registration (Adjustment of inter-color position alignment) (Function code 66) 5-30
1.3.16 Continuous print test (Function code 67) 5-34
1.3.17 Laser unit test pattern print (Function code 68) 5-38
1.3.18 Frame pattern print (One-sided) (Function code 69) 5-39
1.3.19 Frame pattern print (Two-sided) (Function code 70) 5-40
1.3.20 Color test pattern (Function code 71) 5-41
1.3.21 Sensitivity adjustment of density sensor (Function code 72) 5-44
1.3.22 Continuous adjustments of density and registration sensor (Function code 73) 5-45
1.3.23 Setting by country (Function code 74) 5-46
1.3.24 Printout of maintenance information (Function code 77) 5-48
1.3.25 Operational check of fans (Function code 78) 5-50

1.3.26 Display of device log information (Function code 80) 5-51
1.3.27 Display of device error codes (Function code 82) 5-55
1.3.28 Developing bias voltage correction (Function code 83) 5-56
1.3.29 Reset counters for parts (Function code 88) 5-57
1.3.30 Exit from the maintenance mode (Function code 99) 5-57

2. OTHER SERVICE FUNCTIONS 5-58

2.1 Toner Manual Reset Function 5-58
2.2 Drum Cleaning 5-59
2.3 Counter Reset of Consumable Parts (Drum Unit/Belt Unit) 5-60

CHAPTER 6 WIRING DIAGRAM

1. WIRING DIAGRAM 6-1

CHAPTER 7 PERIODICAL MAINTENANCE

1. SAFETY PRECAUTIONS 7-1

2. PERIODICAL REPLACEMENT PARTS 7-2

2.1 Procedures to Replace Periodical Replacement Parts 7-2
2.1.1 Fuser unit 7-3
2.1.2 Laser unit 7-12
2.1.3 PF kit 1 7-26
2.1.4 PF kit 2 7-29
2.1.5 PF kit MP 7-32

APPENDIX 1 SERIAL NUMBERING SYSTEM

APPENDIX 2 DELETION OF USER SETTING INFORMATION

APPENDIX 3 INSTALLING THE MAINTENANCE PRINTER DRIVER

REGULATION

■ Declaration of Conformity (Europe only)

We, Brother Industries, Ltd.
15-1, Naeshiro-cho, Mizuho-ku, Nagoya 467-8561 Japan
declare that this product is in conformity with the essential requirements of all relevant directives and regulations applied within the European Community.

The Declaration of Conformity (DoC) can be downloaded from our website. Visit http://solutions.brother.com/ and:

- select “Europe”
- select your country
- select your model
- select “Manuals.”

■ IEC60825-1:2007 Specification (For 220-240V Models Only)

This product is a Class 1 laser product as defined in IEC60825-1:2007 specifications.
The label shown below is attached in countries where required.

This product has a Class 3B Laser Diode which emits invisible laser radiation in the Scanner Unit. The Scanner Unit should not be opened under any circumstances.

Internal Laser radiation

Wave length: 770 - 800 nm
Output: 25 mW max.
Laser Class: Class 3B

WARNING

Use of controls, adjustments or performance of procedures other than those specified in this manual may result in hazardous radiation exposure.

■ Wireless LAN (Models with Wireless LAN function only)

This product supports Wireless LAN.

Confidential

■ Disconnect device

CAUTION

This product must be installed near an electrical socket that is easily accessible. In case of emergencies, you must disconnect the power cord from the electrical socket to shut off power completely.

■ Wiring information (U.K. only)

If you need to replace the plug fuse, fit a fuse that is approved by ASTA to BS1362 with the same rating as the original fuse.

Always replace the fuse cover. Never use a plug that does not have a cover. If in any doubt, call a qualified electrician.

Warning -This product must be earthed.

The wires in the mains lead are coloured in line with the following code:

- Green and Yellow: Earth
- Blue: Neutral
- Brown: Live

■ LAN connection

CAUTION

DO NOT connect this product to a LAN connection that is subject to over-voltages.

■ Radio interference

This product complies with EN55022 (CISPR Publication 22)/Class B.

■ Recycling information in accordance with the WEEE and Battery Directives

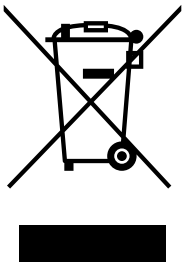

Product mark

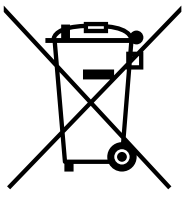

Battery mark

European Union only

The product/battery is marked with one of the above recycling symbols. It indicates that at the end of the life of the product/battery, you should dispose of it separately at an appropriate collection point and not place it in the normal domestic waste stream.

Confidential

■ International ENERGY STAR® Qualification Statement

The purpose of the International ENERGY STAR® Program is to promote the development and popularization of energy-efficient office equipment.

As an ENERGY STAR® Partner, Brother Industries, Ltd. has determined that this product meets the ENERGY STAR® specifications for energy efficiency.

■ Federal Communications Commission (FCC) Declaration of Conformity (USA only)

Responsible Party: Brother International Corporation
200 Crossing Boulevard
Bridgewater, NJ 08807-0911 USA
TEL: (908) 704-1700

declares, that the products

Product Name: Color Laser Printer
Model Numbers: HL-L8250CDN

Product Name: Color Laser Printer
Model Numbers: HL-L8350CDW/HL-L8350CDWT
Designation Name: HL-L8350CDW

Product Name: Color Laser Printer
Model Numbers: HL-L9200CDW/HL-L9200CDWT
Designation Name: HL-L9200CDW

comply with Part 15 of the FCC Rules. Operation is subject to the following two conditions: (1) This device may not cause harmful interference, and (2) this device must accept any interference received, including interference that may cause undesired operation.

This equipment has been tested and found to comply with the limits for a Class B digital device, pursuant to Part 15 of the FCC Rules. These limits are designed to provide reasonable protection against harmful interference in a residential installation. This equipment generates, uses, and can radiate radio frequency energy and, if not installed and used in accordance with the instructions, may cause harmful interference to radio communications. However, there is no guarantee that interference will not occur in a particular installation. If this equipment does cause harmful interference to radio or television reception, which can be determined by turning the equipment off and on, the user is encouraged to try to correct the interference by one or more of the following measures:

- Reorient or relocate the receiving antenna.
- Increase the separation between the equipment and receiver.
- Connect the equipment into an outlet on a circuit different from that to which the receiver is connected.
- Call the dealer or an experienced radio/TV technician for help.

(Wireless network models only)

- This transmitter must not be co-located or operated in conjunction with any other antenna or transmitter.

Confidential

IMPORTANT

- Changes or modifications not expressly approved by Brother Industries, Ltd. could void the user's authority to operate the equipment.
- A shielded interface cable should be used to ensure compliance with the limits for a Class B digital device.

■ RF Exposure Notice (USA or Canada only) (Wireless models ONLY)

This equipment complies with FCC/IC radiation exposure limits set forth for an uncontrolled environment and meets the FCC radio frequency (RF) Exposure Guidelines in Supplement C to OET65 and RSS-102 of the IC radio frequency (RF) Exposure rules. This equipment should be installed and operated keeping the radiator at least 20 cm or more away from person's body (excluding extremities: hands, wrists, feet and ankles).

Cet équipement est conforme aux limites d'exposition aux rayonnements énoncées pour un environnement non contrôlé et respecte les règles les radioélectriques (RF) de la FCC lignes directrices d'exposition dans le Supplément C à OET65 et d'exposition aux frequencies radioélectriques (RF) CNR-102 de l'IC. Cet équipement doit être installé et utilisé en gardant une distance de 20 cm ou plus entre le dispositif rayonnant et le corps (à l'exception des extrémités: mains, poignets, pieds et chevilles).

■ Wireless connection (Mexico only)

The operation of this equipment is subject to the following two conditions:

(1) it is possible that this equipment or device may not cause harmful interference, and (2) this equipment or device must accept any interference, including interference that may cause undesired operation.

La operación de este equipo está sujeta a las siguientes dos condiciones:

(1) es posible que este equipo o dispositivo no cause interferencia perjudicial y (2) este equipo o dispositivo debe aceptar cualquier interferencia, incluyendo la que pueda causar su operación no deseada.

■ Industry Canada Compliance Statement (Canada only)

This Class B digital apparatus complies with Canadian ICES-003.

Cet appareil numérique de la classe B est conforme à la norme NMB-003 du Canada.

Operation is subject to the following two conditions: (1) this device may not cause interference, and (2) this device must accept any interference, including interference that may cause undesired operation of this device.

L'utilisation de ce dispositif est autorisée seulement aux conditions suivantes:
(1) il ne doit pas produire de brouillage et (2) l'utilisateur du dispositif doit être prêt à accepter tout brouillage radioélectrique reçu, même si ce brouillage est susceptible de compromettre le fonctionnement du dispositif.

Confidential

■ Laser safety (For 110-120V Models Only)

This equipment is certified as a Class 1 laser product as defined in IEC60825-1:2007 specifications under the U.S. Department of Health and Human Services (DHHS) Radiation Performance Standard according to the Radiation Control for Health and Safety Act of 1968. This means that the equipment does not produce hazardous laser radiation.

Since radiation emitted inside the equipment is completely confined within protective housings and external covers, the laser beam cannot escape from the product during any phase of user operation.

■ FDA regulations (For 110-120V Models Only)

U.S. Food and Drug Administration (FDA) has implemented regulations for laser products manufactured on and after August 2, 1976. Compliance is mandatory for products marketed in the United States. One of the following labels on the back of the product indicates compliance with the FDA regulations and must be attached to laser products marketed in the United States.

Manufactured:
BROTHER TECHNOLOGY (SHENZHEN) LTD.
No.6 Gold Garden Ind. Nanling, Nanwan, Longgang, Shenzhen, China
This product complies with FDA performance standards for laser products except for deviations pursuant to Laser Notice No. 50, dated June 24, 2007.

WARNING

Use of controls, adjustments or performance of procedures other than those specified in this manual may result in hazardous invisible radiation exposure.
Internal laser radiation
Max. Radiation Power: 25 mW
Wave Length: 770 - 800 nm
Laser Class: Class 3B

■ For use in the USA or Canada only

These products are made for use in the USA and Canada only. We cannot recommend using them overseas because the power requirements of your product may not be compatible with the power available in foreign countries. Using USA or Canada models overseas is at your own risk and may void your warranty.

Confidential

SAFETY INFORMATION

■ Definitions of Warnings, Cautions, Notes and Memos

The following conventions are used in this manual:

Mark	Contents
	WARNING indicates a potentially hazardous situation which, if not avoided, could result in death or serious injuries.
	CAUTION indicates a potentially hazardous situation which, if not avoided, may result in minor or moderate injuries.
	IMPORTANT indicates a potentially hazardous situation which, if not avoided, may result in damage to property or loss of product functionality.
	Prohibition icons indicate actions that must not be performed.
	Electrical Hazard icons alert you to possible electrical shock.
	Fire hazard icons alert you to the possibility of fire.
	Hot Surface icons warn you not to touch product parts that are hot.
Note	Notes tell you how you should respond to a situation that may arise or give tips about how the operation works with other features.
Memo	Memo tells you bits of knowledge to help understand the machine.

Confidential

■ To use the Machine Safely

Please keep these instructions for later reference and read them before attempting any maintenance. If you do not follow these safety instructions, there is a possibility of a fire, electrical shock, burn or suffocation.

WARNING

ELECTRICAL HAZARDS

Failure to follow the warnings in this section may create the risk of an electrical shock. In addition, you could create an electrical short, which may create the risk of a fire.

There are high voltage electrodes inside the product. Before you access the inside of the product, including for routine maintenance such as cleaning, make sure you have unplugged the power cord from the AC power outlet, as well as Ethernet (RJ-45) cables (Network models only) from the product. Never push objects of any kind into this product through cabinet slots, since they may touch dangerous voltage points or short out parts.

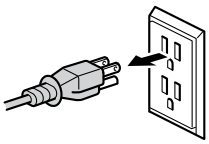

DO NOT handle the plug with wet hands.

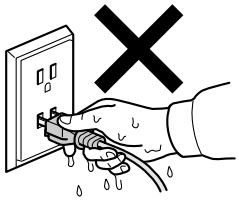

DO NOT use this product during an electrical storm.

Always make sure the plug is fully inserted.
DO NOT use the product or handle the cord if the cord has become worn or frayed.

DO NOT allow this product to come into contact with water.

Confidential

This product should be connected to an AC power source within the range indicated on the rating label. DO NOT connect it to a DC power source or inverter.

Power Cord Safety:

- This product is equipped with a 3-wire grounded plug. This plug will only fit into a grounded power outlet. This is a safety feature. DO NOT attempt to defeat the purpose of the grounded plug.
- Only use the power cord supplied with this product.
- This product should be positioned so that nothing pinches or constricts the power cord. DO NOT allow anything to rest on the power cord. DO NOT place this product where people may step on the cord. DO NOT place this product in a position where the cord is stretched or where strain is otherwise put on the cord. Doing so may cause the cord to become worn or frayed.
- Brother strongly recommends that you DO NOT use any type of extension cord.

- DO NOT put a toner cartridge, a toner cartridge and drum unit assembly, or a waste toner box into a fire. It could explode, resulting in injuries.
- DO NOT use flammable substances, any type of spray, or an organic solvent/liquid containing alcohol or ammonia to clean the inside or outside of the product. Doing so could cause a fire or electrical shock. Instead, use only a dry, lint-free cloth.

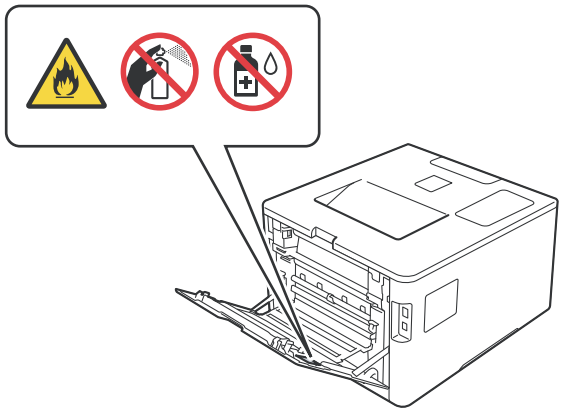

DO NOT attempt to operate this product when a paper jam or stray pieces of paper are inside the product. Prolonged contact of the paper with the fuser unit could cause a fire.

DO NOT use a vacuum cleaner to clean up scattered toner. Doing this might cause the toner dust to ignite inside the vacuum cleaner, potentially starting a fire. Please carefully clean the toner dust with a dry, lint-free soft cloth and dispose of it according to local regulations.

Confidential

HOT SURFACE

After you have just used the product, some internal parts of the product will be extremely hot. Wait for the product to cool down before you touch the internal parts of the product.

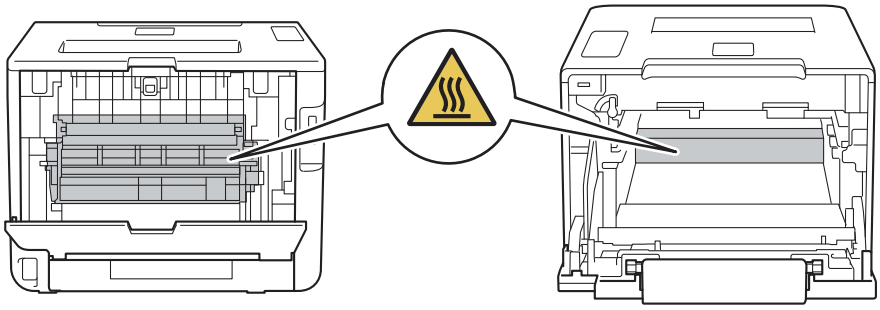

This product is heavy and weighs more than 20.0 kg. (44.1 lb). To prevent possible injuries, at least two people should lift the product. One person should hold the front of the product, and one person should hold the back, as shown in the illustration below. Be careful not to trap your fingers when you put the product down.

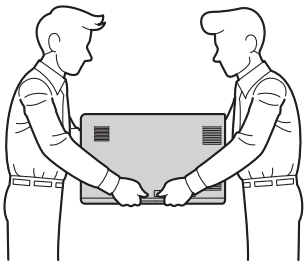

If you use a Lower Tray, DO NOT carry the product with the Lower Tray as you may be injured or cause damage to the product because it is not attached to the Lower Tray.

Confidential

■ Caution for Laser Product (WARNHINWEIS fur Laser drucker)

CAUTION: When the machine during servicing is operated with the cover open, the regulations of VBG 93 and the performance instructions for VBG 93 are valid.

CAUTION: In case of any trouble with the laser unit, replace the laser unit itself. To prevent direct exposure to the laser beam, do not try to open the enclosure of the laser unit.

ACHTUNG: Im Falle von Störungen der Lasereinheit muß diese ersetzt werden. Das Gehäuse der Lasereinheit darf nicht geöffnet werden, da sonst Laserstrahlen austreten können.

<Location of the scanner windows>

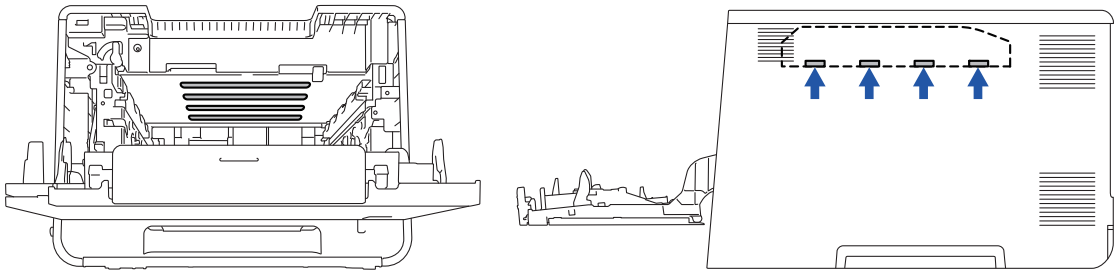

■ Additional Information

When servicing the optical system of the machine, be careful not to place a screwdriver or other reflective object in the path of the laser beam. Be sure to take off any personal accessories such as watches and rings before working on the machine. A reflected beam, though invisible, can permanently damage the eyes.

Since the beam is invisible, the following caution label is attached on the laser unit.

Confidential

CHAPTER 1 SUPPLEMENTAL SPECIFICATIONS

1.1 General

The table below shows the functional comparison between the models covered by this manual.

Model	HL-L8250CDN	HL-L8350CDW	HL-L8350CDWT	HL-L9200CDW	HL-L9200CDWT
LAN	Wired	Wired/Wireless	Wired/Wireless	Wired/Wireless	Wired/Wireless
LCD type	16 characters x 2 lines	16 characters x 2 lines	16 characters x 2 lines	Touch panel	Touch panel
LT	Option	Option	Standard equipment	Option	Standard equipment

Model		HL-L8250CDN	HL-L8350CDW	HL-L8350CDWT	HL-L9200CDW	HL-L9200CDWT
Warm-up time	From Sleep mode	Less than 29 seconds at 73.4 F (23 °C)				
	From Power OFF → ON	Less than 31 seconds at 73.4 F (23 °C)				
First print time	From Ready mode	Monochrome/Full Color: Less than 15/15 seconds				
	From Sleep mode	Monochrome/Full Color: Less than 35/35 seconds				
CPU		StarSaphire (SS1000) 400 MHz				
Dimensions	Carton size	600 x 524 x 513 mm (23.6 x 20.6 x 20.2 inch) (Except for China) 640 x 564 x 553 mm (25.2 x 22.2 x 21.8 inch) (for China)		810 x 592 x 847 mm (31.9 x 23.3 x 33.3 inch)	640 x 564 x 553 mm (25.2 x 22.2 x 21.8 inch)	810 x 597 x 887 mm (31.9 x 23.5 x 34.9 inch)
	Machine size	410 x 486 x 313 mm (16.1 x 19.1 x 12.3 inch)		410 x 495 x 445 mm (16.1 x 19.5 x 17.5 inch)	410 x 486 x 313 mm (16.1 x 19.1 x 12.3 inch)	410 x 495 x 445 mm (16.1 x 19.5 x 17.5 inch)
Weights	with Carton	24.8 kg/54.7 lb (for the U.S.A./Latin America) 25.2 kg/55.6 lb (for Europe) 25.5 kg/56.3 lb (for Asia/Oceania) 25.4 kg/56.0 lb (for China)		38.4 kg/84.7 lb	25.4 kg/56.0 lb (for the U.S.A.) 26.1 kg/57.6 lb (for Oceania) 25.5 kg/56.2 lb (for China)	39.1 kg/86.1 lb (for the U.S.A.) 39.5 kg/87.0 lb (for Europe)
	without Carton with toner/drum	21.5 kg/47.5 lb (for the U.S.A./Latin America.) 21.9 kg/48.4 lb (for Europe) 22.2 kg/49.0 lb (for Asia/Oceania) 21.6 kg/47.7 lb (for China)		27.8 kg/61.4 lb	21.6 kg/47.7 lb (for the U.S.A.) 22.3 kg/49.3 lb (for Oceania) 21.7 kg/47.9 lb (for China)	27.9 kg/61.6 lb (for the U.S.A.) 28.3 kg/62.5 lb (for Europe)
	without Carton, and toner/drum	15.8 kg/34.8 lb		22.1 kg/48.7 lb	15.9 kg/35.1 lb	22.2 kg/48.9 lb

Specifications are subject to change without prior notice.

1.2 Network Connectivity

Model		HL-L8250CDN	HL-L8350CDW	HL-L8350CDWT	HL-L9200CDW	HL-L9200CDWT
Wired network	Network node type	NC-8600h				
Wireless network	Network node type	N/A	NC-8200w			

Specifications are subject to change without prior notice.

1.3 Service Information

Model		HL-L8250CDN	HL-L8350CDW	HL-L8350CDWT	HL-L9200CDW	HL-L9200CDWT
Machine life		200,000 pages (A4 /Letter size) or 5 years				
MTBF		4,000 hours				
MTTR		0.5 hours				
Maximum monthly volume		Up to 40,000 pages	Up to 60,000 pages		Up to 75,000 pages	
Periodical maintenance parts	Fuser unit	100,000 pages				
	Laser unit	100,000 pages				
	PF kit 1	100,000 pages				
	PF kit 2	100,000 pages				
	PF kit MP	50,000 pages				

* As for replacement of the periodical maintenance parts, refer to “PERIODICAL MAINTENANCE” in Chapter 7.

Specifications are subject to change without prior notice.

1.4 Supplies

<table>
<tr><th colspan="3">Model</th><th>HL-L8250CDN</th><th>HL-L8350CDW</th><th>HL-L8350CDWT</th><th>HL-L9200CDW</th><th>HL-L9200CDWT</th></tr>
<tr><td rowspan="8">Toner cartridge</td><td rowspan="2">Starter Toner *1</td><td>Black</td><td colspan="3">Approximately 2,500 pages
(Except for China)
Approximately 4,000 pages (for China)</td><td colspan="2">Approximately 6,000 pages
(Except for China)
Approximately 4,000 pages
(for China)</td></tr>
<tr><td>Cyan, Magenta, Yellow</td><td colspan="3">Approximately 1,500 pages
(Except for China)
Approximately 3,500 pages (for China)</td><td colspan="2">Approximately 6,000 pages
(Except for China)
Approximately 3,500 pages
(for China)</td></tr>
<tr><td rowspan="2">Standard Toner</td><td>Black</td><td colspan="3">Approximately 2,500 pages
(Except for China)
N/A (for China)</td><td colspan="2">N/A</td></tr>
<tr><td>Cyan, Magenta, Yellow</td><td colspan="3">Approximately 1,500 pages
(Except for China)
N/A (for China)</td><td colspan="2">N/A</td></tr>
<tr><td rowspan="2">High Capacity Toner</td><td>Black</td><td colspan="3">Approximately 4,000 pages
(Except for Asia)
N/A (for Asia)</td><td colspan="2">Approximately 4,000 pages
(for China)
N/A (Except for China)</td></tr>
<tr><td>Cyan, Magenta, Yellow</td><td colspan="3">Approximately 3,500 pages
(Except for Asia)
N/A (for Asia)</td><td colspan="2">Approximately 3,500 pages
(for China)
N/A (Except for China)</td></tr>
<tr><td rowspan="2">Super High Capacity Toner</td><td>Black</td><td>Approximately 6,000 pages
(for Asia/ China)
N/A
(Except for Asia/China)</td><td colspan="2">Approximately 6,000 pages
(Except for the U.S.A./ Oceania)
N/A (for the U.S.A./Oceania)</td><td colspan="2">Approximately 6,000 pages</td></tr>
<tr><td>Cyan, Magenta, Yellow</td><td>Approximately 6,000 pages
(for Asia/ China)
N/A
(Except for Asia/China)</td><td colspan="2">Approximately 6,000 pages
(Except for the U.S.A./ Oceania)
N/A (for the U.S.A./Oceania)</td><td colspan="2">Approximately 6,000 pages</td></tr>
<tr><td colspan="8">* When printing A4/Letter size one-sided pages in accordance with ISO/IEC 19798.
Shelf life: 2 years without opening (6 months after opening)</td></tr>
<tr><td colspan="3">Drum unit</td><td colspan="5">Life expectancy: Approximately 25,000 pages (1 page/job)
The life expectancy varies according to the use condition.
Shelf life: 2 years</td></tr>
<tr><td colspan="8">The shelf life of toner cartridge and drum unit is guaranteed under the normal condition as below;
(Temperature) Normal condition: 0 to 40 °C
* Storage condition at the temperature of 40 to 50 °C: Up to 5 days
* Storage condition at the temperature of -20 to 0 °C: Up to 5 days
(Humidity) Normal condition: 35 to 85 % (without condensation)
* Storage condition at the humidity of 85 to 95 %: Up to 5 days (without condensation)
* Storage condition at the humidity of 10 to 35 %: Up to 5 days (without condensation)</td></tr>
<tr><td colspan="3">Belt unit</td><td colspan="5">Life expectancy: Approximately 50,000 pages (5 page/job)
Approximately 20,000 pages (1 page/job)
The life expectancy varies according to use the condition.</td></tr>
<tr><td colspan="3">Waste toner box</td><td colspan="5">Life expectancy: Approximately 50,000 pages/waste toner box</td></tr>
</table>

*1 Toner supplied with the machine.

Specifications are subject to change without prior notice.

CHAPTER 2 ERROR INDICATION AND TROUBLESHOOTING

1. INTRODUCTION

Troubleshooting is the countermeasure procedures that the service personnel should follow if an error or malfunction occurs with the machine. It is impossible to anticipate all of the possible troubles which may occur in future and determine the troubleshooting procedures, so this chapter covers some sample troubles. However, those samples will help the service personnel pinpoint and repair other defective elements.

1.1 Precautions

Be sure to observe and follow all the precautions to prevent any secondary problems from happening during troubleshooting.

(1) Always turn OFF the power and unplug the power cable before removing any covers or PCBs, adjusting the machine and so on. If you need to take voltage measurements with the power switched on, take the greatest of care not to receive an electric shock.

(2) When connecting or disconnecting cable connectors, make sure that you hold the connector body and not the cables.

(3) Static electricity charged in your body may damage electronic parts. Before handling the PCBs, touch a metal portion of the machine to discharge static electricity charged in your body. When transporting PCBs, be sure to wrap them in conductive sheets.
When replacing the PCBs, put on a grounding wrist band and perform the job on a antistatic mat. Also take care not to touch the conductor sections on the flat cables.

(4) Follow the warning by all means.

WARNING

Hazard labels as shown below are attached to the machine. Fully understand the descriptions on the hazard labels and observe them during troubleshooting.
Take extreme care not to remove or damage the hazard labels.

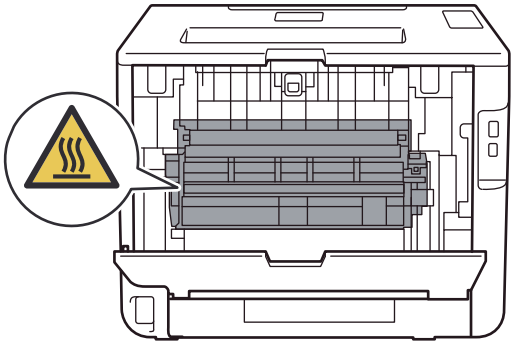

WARNING

DO NOT use any flammable spray or flammable solvent such as alcohol, benzine, or thinner in or around the machine. Otherwise a fire or electric shock may result.

(5) Check again that the portions and parts repaired or removed during the repair work function properly when the repair is completed.

1.2 Checks before Commencing Troubleshooting

Check the following items before attempting to repair the machine.

■ Operating environment

(1) The machine is placed on a flat, stable surface.

(2) The machine is used in a clean environment where the temperature is between 10 °C (50 °F) and 32.5 °C (90.5 °F) and the relative humidity is maintained between 20 % and 80 %.

(3) Ensure the machine is not exposed to direct sunlight, excessive heat, moisture, or dust.

(4) Keep the machine horizontal when you carry it. To prevent injuries when moving or lifting this machine, make sure to use at least two people.

■ Power supply

(1) The AC input power supply described on the rating plate of the machine should be within ±10 % of the rated voltage.

(2) The AC input power supply is within the regulated value.

(3) The cables and harnesses are connected correctly.

(4) The fuses are not blown.

■ Paper

(1) A recommended type of paper is being used.

(2) The paper is not damp.

(3) The paper is not short-grained paper or acid paper.

■ Consumable parts

(1) The drum unit (including the toner cartridge) is installed correctly.

(2) The belt unit and waste toner box are installed correctly.

■ Others

(1) Condensation

When the machine is moved from a cold place into a warm room, condensation may occur inside the machine, causing various problems as listed below.

- Condensation on the surface of optical devices such as the scanner windows, lens, reflecting mirror, and protection glass, etc, may cause light print image.
- If the exposure drum is cold, the electrical resistance of the photosensitive layer is increased, making it impossible to obtain the correct contrast when printing.
- Condensation on the charge unit may cause corona charge leakage.
- Condensation on the plate and separation pad may cause paper feed problems.

If condensation has occurred, leave the machine for at least two hours to allow it to reach room temperature.

If the drum unit is unpacked soon after it is moved from a cold place to a warm room, condensation may occur inside the unit which may cause incorrect images. Instruct the user to allow the unit to come to room temperature before unpacking it. This will take one or two hours.

(2) Low temperature

The motor may not drive normally under the low temperature environment. This is due to there being too much load to drive each unit. In this case, increase the room temperature.

■ Cleaning

Use a soft dry lint-free cloth.

WARNING

DO NOT use any flammable spray or flammable solvent such as alcohol, benzine, or thinner to clean the machine. **DO NOT** use these articles near the machine.

2. OVERVIEW

2.1 Cross-section Drawing

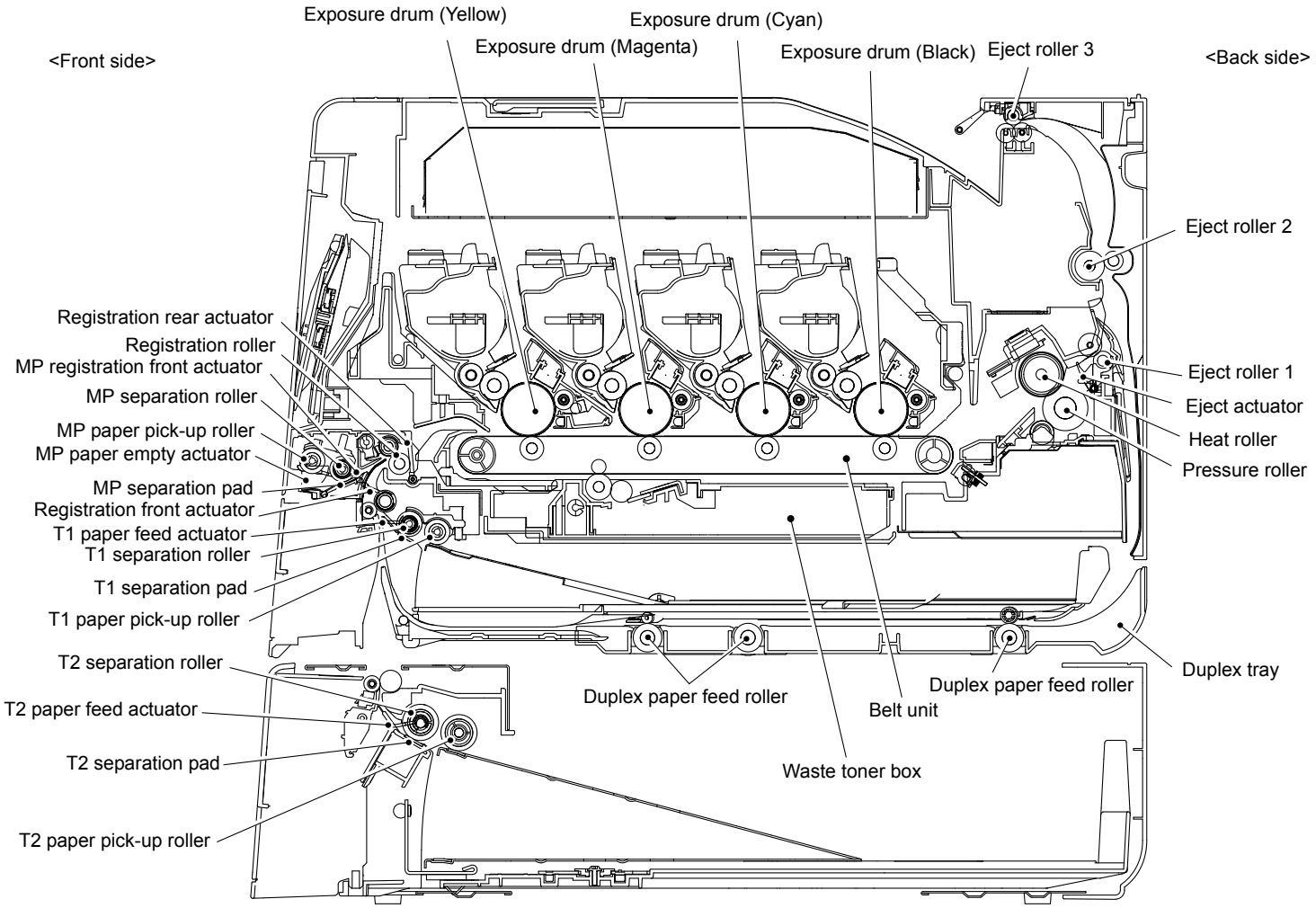

Fig. 2-1

Confidential

2.2 Paper Feeding

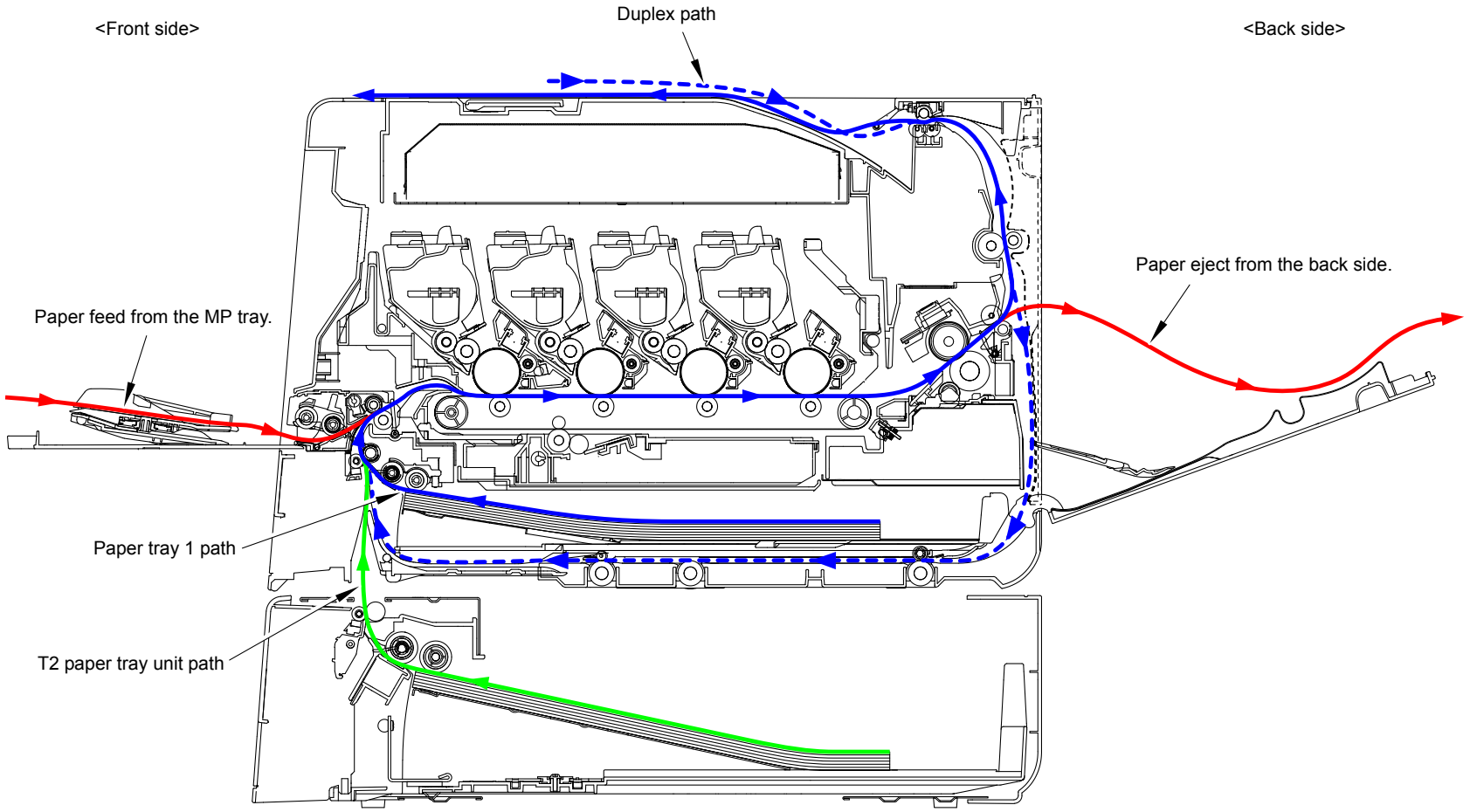

Fig. 2-2

Confidential

2.3 Operation of Each Part

Part name	Operation
T1 paper pick-up roller	Feed the paper from the paper tray 1 to T1 separation roller.
T1 separation roller, T1 separation pad	Separates the paper fed from paper tray 1 into single sheets.
T1 paper feed actuator (T1 paper feed sensor)	Detect whether or not the paper tray 1 is installed (open or closed). Detect the paper jam of front part.
Registration front actuator (Registration front sensor)	Detect the front edge of paper and control the drive of the registration roller. Detect the paper jam of front part. Detect whether or not the paper is fed from the paper tray 1.
Registration roller	Hit the front edge of the paper to the stopped registration roller and the inclination of the paper is corrected. After correction is made, the registration roller rotates to feed the paper to the belt unit.
Registration rear actuator (Registration rear sensor)	Detect the passage of paper and adjust the starting position for writing on a sheet of paper. Detect the paper jam of the front part and center part. Detect the rear edge of paper and identify the paper size.
Belt unit	Feed the paper to the drum unit and transfer toner on the paper.
Heat roller, Pressure roller	Fuse and fix the toner transferred on paper by heat and pressure, and feed the paper to the eject roller 1.
Eject actuator (Eject sensor)	Detect whether or not paper is ejected from the fuser unit. In the case of the 2-sided printing, detect the rear edge of paper and adjust the timing of the eject roller 2 and 3 switching.
Eject roller 1	Feed the paper ejected from the fuser unit to the eject roller 2.
Eject roller 2	Feed the paper to the eject roller 3. In the case of the 2-sided printing, after the front of the sheet is printed and the paper is fed to the eject roller 3 up to a certain point, the eject roller 2 rotates conversely and feeds the paper fed from the eject roller 3 to the duplex tray.
Eject roller 3	Eject the paper to the face-down output tray. In the case of the 2-sided printing, after the front of the sheet is printed and the paper is fed up to a certain point, eject roller 3 rotates conversely, and the paper is fed to the eject roller 2.
Duplex paper feed roller	Feed the paper passed in the duplex tray to the registration roller.
MP paper pick-up roller	Feed the paper from the MP tray to MP separation roller.
MP separation roller, MP separation pad	Separates the paper fed from the MP tray into single sheets.
MP paper empty actuator (MP paper empty sensor)	Detect whether paper is loaded in the MP tray.
MP registration front actuator (MP registration front sensor)	Detect the front edge of paper from MP tray and control the drive of the registration roller. Detect the paper jam of MP part. Detect whether or not the paper is fed from the T2 paper tray unit.
T2 paper pick-up roller	Feed the paper from the T2 paper tray unit to T2 separation roller.
T2 separation roller, T2 separation pad	Separates the paper fed from T2 paper tray unit into single sheets.
T2 paper feed actuator (T2 paper feed sensor)	Detect whether or not the T2 paper tray unit is installed (open or closed). Detect the paper jam of front part.
Paper eject origin sensor	Detect the eject/reverse position state of the gear of the paper eject ASSY.

Confidential

2.4 Block Diagram

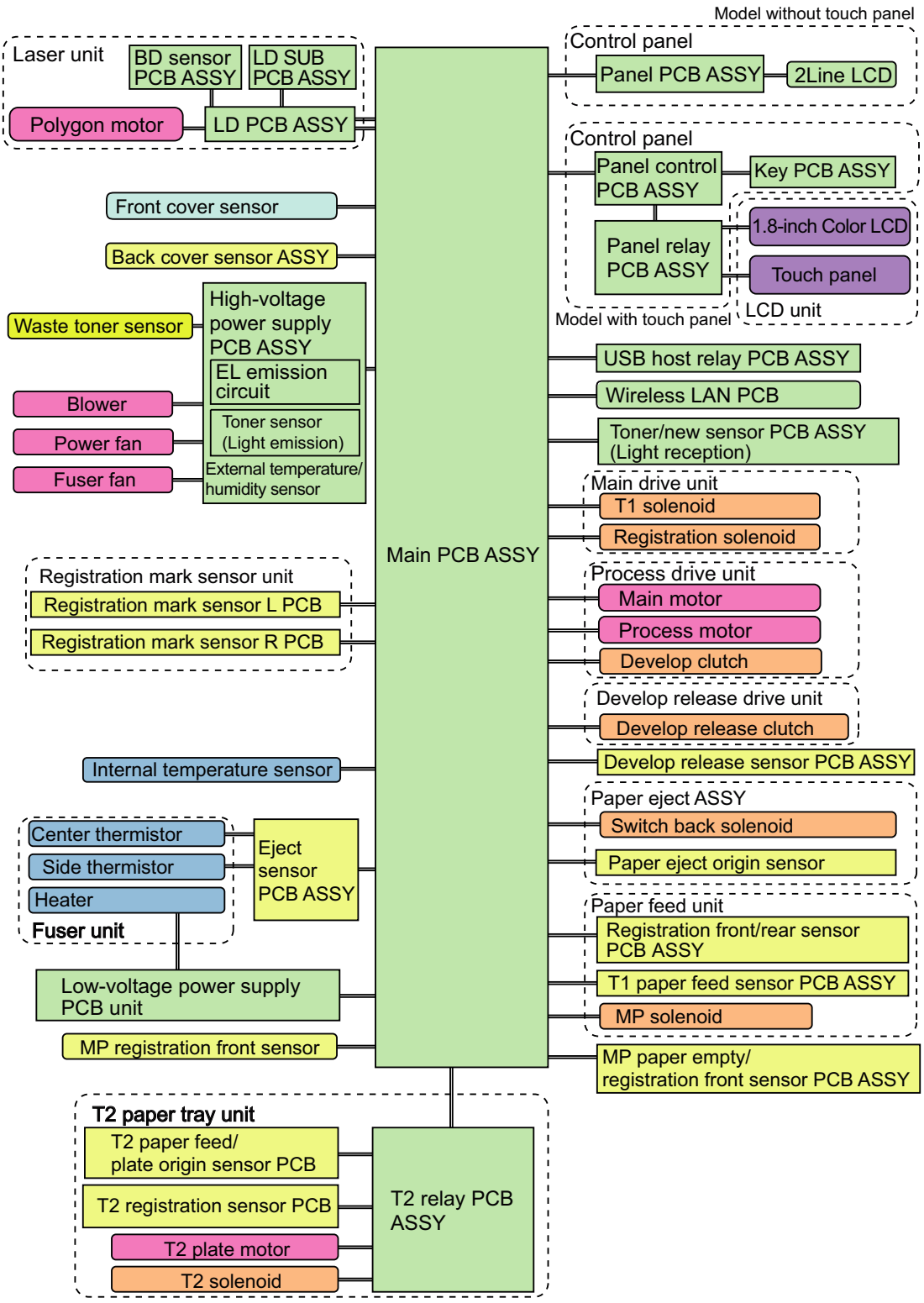

Fig. 2-3

Confidential

2.5 Main Components

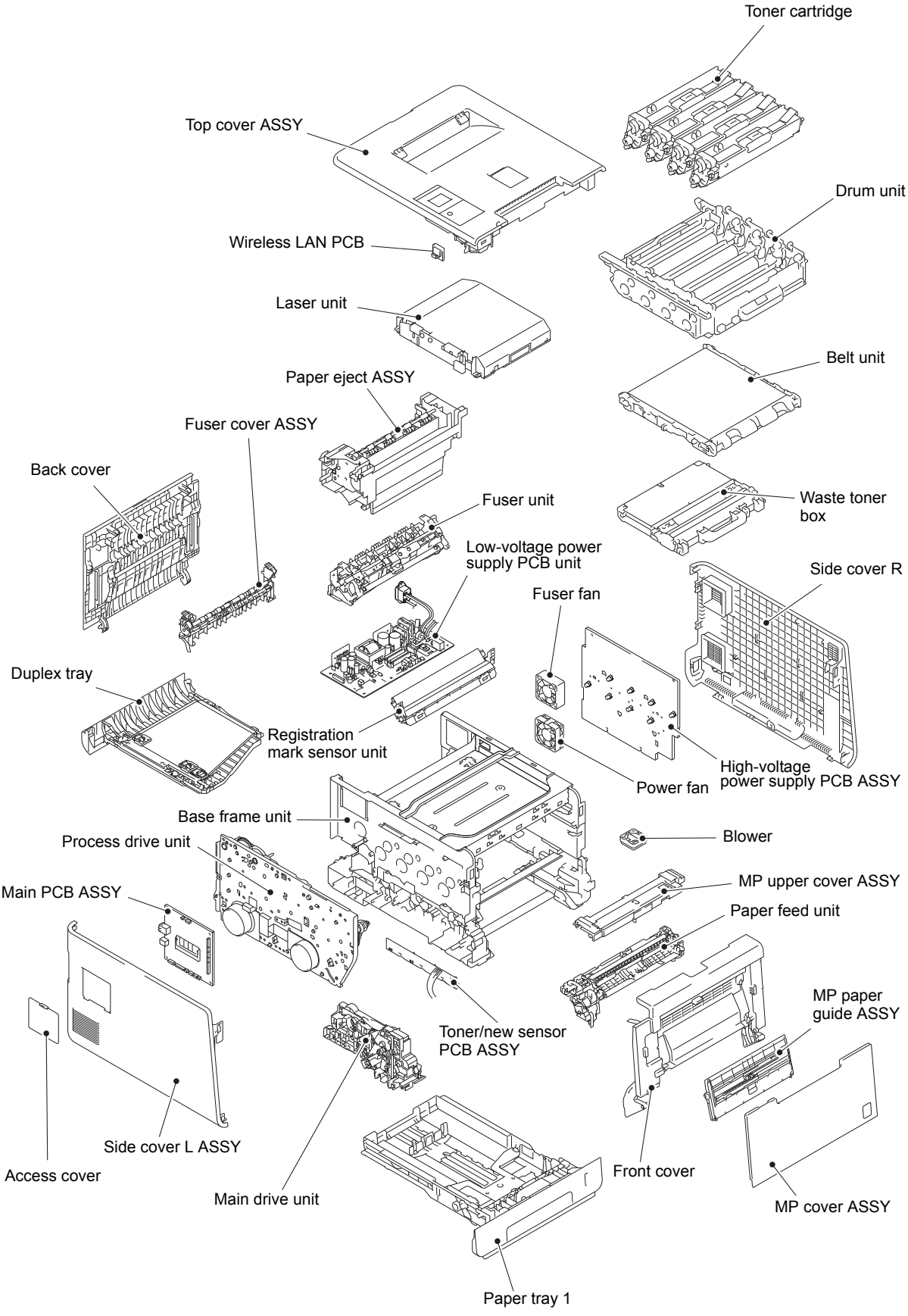

Fig. 2-4

3. ERROR INDICATIONS

This machine includes a self-diagnosis function. If the machine does not work normally it judges that an error has occurred, and indicates the corresponding error message on the LCD, which in turn helps the service personnel to quickly find out the problem.

3.1 Error Codes

The shaded errors hardly occur under normal use. They may be caused by noise around the installation site, variation in power supply voltage, or software failure.

Error Codes	Description	Refer to:
0100	ASIC error or motor driver error occurred.	2-39
0201	Synchronization signal from the main motor cannot be detected. Or the main motor speed is unstable after a set period of time.	2-39
0202	Synchronization signal from the process motor cannot be detected. Or the process motor speed is unstable after a set period of time.	2-39
0203	---	
0204	---	
0205	---	
0206	---	
0207	---	
0208	---	
0209	---	
0300	The Lock signal of the polygon motor of the laser unit cannot be detected.	2-40
0305	---	
0401	BD sensor 1 damaged.	2-40
0402	BD sensor 4 damaged.	2-40
0405	---	
0501	The center thermistor of the fuser unit does not reach the specified temperature within the specified time.	2-41
0502	After the temperature of the fuser unit rises to a certain level, the temperature of the center thermistor does not reach the specified temperature within the specified period of time in the next step.	2-41
0503	The center thermistor of the fuser unit detected a temperature higher than the specified value.	2-41
0504	After the center thermistor of the fuser unit was normally heated, it detected a temperature lower than the specified value.	2-41
0505	The center thermistor of the fuser unit detected a temperature rise greater than the specified value within a set period of time.	2-41
0506	The center thermistor of the fuser unit detected a temperature fall greater than the specified value within a set period of time.	2-41
050A	The center thermistor or side thermistor of the fuser unit detected some temperature error in the hardware.	2-42
050B	When the temperature of the center thermistor of the fuser unit is lower than the idle temperature, the side thermistor of the fuser unit detected a temperature higher than the specified value.	2-42

Error Codes	Description	Refer to:
050C	When the temperature of the center thermistor of the fuser unit is higher than the idle temperature, the side thermistor of the fuser unit detected a temperature lower than the specified value.	2-42
050D	---	
050F	---	
0600	---	
0700	---	
0800	Error occurred in the internal temperature sensor.	2-43
0900	Machine detected more than 100 times that supplied power was unstable.	2-43
0A01	The blower failure was detected.	2-43
0A02	The fuser fan failure was detected.	2-44
0B01	Error occurred in the high-voltage power supply PCB ASSY while the machine is in operation.	2-44
0B02	Error occurred in the high-voltage power supply PCB ASSY in the ready state.	2-44
0C00	Error occurred in the density sensor.	2-44
0D01	---	
0D02	---	
0D03	---	
0D04	---	
0E00	Communication error occurred in the high-voltage power supply PCB ASSY.	2-45
1003	The registration mark sensor R is dirty and cannot normally receive reflected light.	2-45

Error Codes	Description	Refer to:
1004	The registration mark sensor L is dirty and cannot normally receive reflected light.	2-45
1100	---	
1200	---	
1300	---	
1400	Condensation occurred in the machine.	2-46
1500	Error occurred in the paper eject origin sensor.	2-46
1C00	The reading signal of the EEPROM of the laser unit cannot be detected.	2-46
1D01	---	
1D02	---	
1D03	---	
1D04	---	
1E01	---	
1E02	---	
2001	---	
2002	---	
2003	---	
2004	---	
2005	---	
2006	---	
2101	---	
2102	---	
2103	---	
2104	---	
2105	---	
2201	---	
2202	---	
2203	---	
2204	---	
2205	---	
2206	---	
2207	---	

Error Codes	Description	Refer to:	Error Codes	Description	Refer to:
2301	---		2A03	---	
2302	---		2B01	---	
2401	---		2B02	---	
2402	---		2C01	---	
2403	---		2C02	---	
2404	---		2D01	---	
2405	---		2E01	---	
2408	---		2E02	---	
2409	---		2E03	---	
2501	---		2E04	---	
2502	---		2E05	---	
2503	---		2E06	---	
2504	---		2E07	---	
2601	---		2E08	---	
2602	---		2E0A	---	
2603	---		2F01	---	
2604	---		2F02	---	
2605	---		2F03	---	
2701	---		2F04	---	
2702	---		2F05	---	
2703	---		2F06	---	
2801	---		2F07	---	
2802	---		2F08	---	
2803	---		2F0A	---	
2804	---		3001	---	
2805	---		3002	---	
2806	---		3003	---	
2901	---		3102	---	
2902	---		3202	---	
2903	---		3301	---	
2904	---		3302	---	
2905	---		3401	---	
2906	---		3402	---	
2A01	---		3501	---	
2A02	---		3601	---	

Error Codes	Description	Refer to:
3701	---	
3702	---	
3703	---	
3801	Temperature error occurred in the external temperature/ humidity sensor.	2-47
3802	Humidity error occurred in the external temperature/humidity sensor.	2-47
3900	---	
3A00	Error occurred in the communication between the controller in the main PCB and engine.	2-47
4000	Number of the drum unit rotations reaches the upper limit soon.	2-47
4001	---	
4002	---	
4003	---	
4004	---	
4200	Number of the drum unit rotations has reached the upper limit.	2-47
4201	---	
4202	---	
4203	---	
4204	---	
4208	---	
4300	Number of pages printed with the belt unit will reach the upper limit soon. (90%)	2-48
4400	Number of pages printed with the belt unit has reached the upper limit.	2-48
4408	---	
4500	Number of used pages for the fuser unit has reached the upper limit.	2-48

Error Codes	Description	Refer to:
4600	Number of pages printed with the laser unit has reached the upper limit.	2-48
4700	The waste toner sensor detected that the waste toner box is almost full.	2-49
4800	After the waste toner sensor detected that the waste toner box was almost full, pages more than the specified number have been printed.	2-49
4900	---	
4A00	---	
4B01	Dot counter of the toner cartridge (Black) or develop roller counter reaches the upper limit soon.	2-49
4B02	Dot counter of the toner cartridge (Yellow) or develop roller counter reaches the upper limit soon.	2-49
4B03	Dot counter of the toner cartridge (Magenta) or develop roller counter reaches the upper limit soon.	2-49
4B04	Dot counter of the toner cartridge (Cyan) or develop roller counter reaches the upper limit soon.	2-49
4C01	Dot counter of the toner cartridge (Black) or develop roller counter has reached the upper limit was detected.	2-50
4C02	Dot counter of the toner cartridge (Yellow) or develop roller counter has reached the upper limit was detected.	2-50
4C03	Dot counter of the toner cartridge (Magenta) or develop roller counter has reached the upper limit was detected.	2-50
4C04	Dot counter of the toner cartridge (Cyan) or develop roller counter has reached the upper limit was detected.	2-50

Confidential

Error Codes	Description	Refer to:
4C05	During printing, dot counter of color toner cartridge or develop roller counter has reached the upper limit was detected.	2-50
4D01	---	
4E01	---	
4F01	The new toner sensor of the toner cartridge (Black) could not detect a new cartridge properly.	2-51
4F02	The new toner sensor of the toner cartridge (Yellow) could not detect a new cartridge properly.	2-51
4F03	The new toner sensor of the toner cartridge (Magenta) could not detect a new cartridge properly.	2-51
4F04	The new toner sensor of the toner cartridge (Cyan) could not detect a new cartridge properly.	2-51
5001	Number of used pages for the PF kit MP has reached the upper limit.	2-52
5002	Number of used pages for the PF kit 1 has reached the upper limit.	2-52
5003	Number of used pages for the PF kit 2 has reached the upper limit.	2-52
5004	---	
5005	---	
5100	---	
5200	---	
5301	---	
5302	---	
5401	---	
5402	---	
5406	---	
5502	---	
5602	---	
5702	---	
5801	---	

Error Codes	Description	Refer to:
5802	---	
5902	---	
5A02	---	
5B02	---	
5C02	---	
6001	The front cover sensor detected that the front cover was open.	2-53
6002	---	
6003	---	
6004	The eject sensor detected that the fuser cover was open.	2-53
6007	---	
6101	The toner sensor detected that no toner cartridge (Black) was set.	2-54
6102	The toner sensor detected that no toner cartridge (Yellow) was set.	2-54
6103	The toner sensor detected that no toner cartridge (Magenta) was set.	2-54
6104	The toner sensor detected that no toner cartridge (Cyan) was set.	2-54
6200	The current value between the CHG and GRID terminals and the toner sensor detected that there were no toner cartridges of any colors and detected that the drum unit was not set.	2-54
6201	---	
6202	---	
6203	---	
6204	---	
6208	---	
6209	---	
620A	---	

Error Codes	Description	Refer to:
6300	The waste toner sensor detected that no waste toner box was set.	2-56
6400	The registration mark sensor detected that no belt unit was set.	2-56
6602	---	
6701	---	
6801	The internal temperature sensor or side thermistor of the fuser unit detected a temperature higher than the specified value.	2-57
6802	---	
6901	Some fuser unit errors occurred at power-ON or upon recovery from sleep mode.	2-57
6902	After the errors was detected at the fuser unit, power was turned ON again and the error is being checked. (If power is turned OFF and ON after error code 6901 occurred, this code is displayed for about 15 minutes.)	2-57
6A00	Electric discharge that may be caused by dirt on the corona wire of the drum unit was detected.	2-58
6B01	Electric discharge was detected when the number of the drum unit rotations had become more than twice of the upper limit.	2-58
6B02	---	
6B03	---	
6B04	---	
6B0A	---	
6C01	---	
6C02	After the T2 paper tray unit is opened and closed or the power is turned ON, the T2 plate origin sensor detects that lift-up of the plate of the T2 paper tray unit is not completed within the specified period of time.	2-58
6C03	---	

Error Codes	Description	Refer to:
6C04	---	
6D00	---	
6E00	The develop release sensor detected the developer roller disengagement or engagement failure.	2-59
6F00	Machine detected that supplied power was unstable. (Less than 100 times)	2-59
7000	After the registration rear sensor detects paper pass, the eject sensor does not detect paper pass.	2-59
7001	---	
7002	---	
7003	---	
7004	---	
7100	After the registration rear sensor detects the end of paper pass and the specified period of time has passed, the eject sensor continues to detect paper pass.	2-60
7101	---	
7102	---	
7103	---	
7104	---	
7105	---	
7106	---	
7200	When the paper is fed from the MP tray, after the MP registration front sensor detects paper pass, the registration rear sensor does not detect paper pass after a set period of time.	2-61
7300	In the case of printing by feeding paper from the paper tray 1, after the T1 paper feed sensor detects paper pass, the registration front sensor does not detect paper pass after a set period of time.	2-62
7301	---	

Confidential

Error Codes	Description	Refer to:
7400	In the case of printing by feeding paper from the T2 paper tray unit, after the T2 paper feed sensor detects paper pass, the registration front sensor does not detect paper pass after a set period of time.	2-62
7401	---	
7501	---	
7502	---	
7601	---	
7602	---	
7700	After the first side is printed in 2-sided printing mode, the registration front sensor does not detect paper pass after a set period of time.	2-63
7701	---	
7702	---	
7703	---	
7704	---	
7705	---	
7801	---	
7802	---	
7900	---	
7C00	---	
7D00	---	
7E00	---	
8000	---	
8401	---	
8402	While the T2 paper tray unit is open state, print or adjustment operation was attempted.	2-63
8501	The T1 paper feed sensor detected that the paper tray 1 is open in 2-sided printing or printing by feeding paper from the T2 paper tray unit. (before the registration of printing in the engine)	2-64
8502	---	
8503	---	

Error Codes	Description	Refer to:
8504	---	
8505	The T1 paper feed sensor detected that the paper tray 1 is open in 2-sided printing or printing by feeding paper from the T2 paper tray unit. (after the registration of printing in the engine)	2-64
8506	---	
8507	---	
8508	---	
8601	---	
8602	---	
8603	---	
8604	---	
8701	---	
8702	---	
8703	---	
8801	---	
8802	---	
8901	---	
8902	---	
8903	The back cover sensor detected the open state when 2-sided printing is started. (before the registration of printing in the engine)	2-64
8904	The back cover sensor detected the open state during 2-sided printing. (after the registration of printing in the engine)	2-64
8A01	The registration rear sensor detected that the fed paper was larger or smaller than the specified size in 2-sided printing.	2-65
8A02	The registration rear sensor detected that the length of the paper is too long and it may hit within the machine in 2-sided printing.	2-65
8C00	---	

Confidential

Error Codes	Description	Refer to:
8D01	The registration rear sensor detected that the paper loaded in the paper tray was smaller than the specified size.	2-65
8D02	The paper size which is not supported by the output tray is set for printing from the printer driver.	2-66
8E01	---	
8E02	---	
8E03	---	
8F01	---	
8F02	---	
8F03	---	
9001	The size of paper loaded in the MP tray and the one specified from the driver are not same when paper is fed from the MP tray.	2-66
9002	The size of paper loaded in the paper tray 1 and the one specified from the driver are not same when paper is fed from the paper tray 1.	2-66
9003	The size of paper loaded in the T2 paper tray unit and the one specified from the driver are not same when paper is fed from the T2 paper tray unit.	2-66
9004	---	
9005	---	
9102	---	
9103	---	
9104	---	
9105	---	
9200	---	
9301	When paper was fed from the MP tray, the MP paper empty sensor detected that no paper was in the MP tray.	2-67
9302	When paper was fed from the paper tray 1, the T1 paper feed sensor detected that no paper was in the paper tray 1.	2-67
9303	When paper was fed from the T2 paper tray unit, the T2 paper feed sensor detected that no paper was in the T2 paper tray unit.	2-68
9304	---	
9305	---	
9306	For printing specifying Auto, it was detected that no paper was loaded in any of the paper trays.	2-68
9307	---	
9401	---	
9402	---	
9403	---	
9404	---	
9501	---	
9502	---	
9503	---	
9504	---	
9505	---	
9601	---	
9608	---	
9701	For 2-sided printing, the tray whose paper size was not supported by 2-sided printing was selected.	2-69
9702	For printing by feeding paper from the paper tray 1, the size of paper specified from the driver set the size which was not supported by the paper tray 1.	2-69
9703	For printing by feeding paper from the T2 paper tray unit, the size of paper specified from the driver set the size which was not supported by the T2 paper tray unit.	2-69
9704	---	
9705	---	

Confidential

Error Codes	Description	Refer to:
9801	Error occurred with the value measured during color density adjustment performed from the control panel.	2-70
9802	Dot counter or develop roller counter of color toner has reached the upper limit during color density adjustment performed from the control panel.	2-70
9803	Density patch measurement ended unsuccessfully during color density adjustment performed from the control panel.	2-71
9804	Error occurred with the value measured during density sensor sensitivity calibration.	2-71
9901	---	
9902	---	
9903	---	
9A01	Error occurred with the value measured during auto color registration performed from the control panel.	2-72
9A02	Dot counter or develop roller counter of color toner has reached the upper limit during auto color registration performed from the control panel.	2-72
9A03	Error occurred during patch data printing in auto color registration performed from the control panel.	2-73
9C01	---	
9C02	---	
9C03	---	
9C06	---	
9C07	---	
A000	---	
A200	---	
A300	---	
A400	---	

Error Codes	Description	Refer to:
A500	---	
A600	---	
A700	---	
A800	---	
A900	---	
AA00	---	
AB00	---	
AC00	---	
AD00	---	
AF00	---	
B000	---	
B300	---	
B400	---	
B700	---	
B800	---	
B900	---	
BA00	---	
BB00	---	
BC00	---	
BD00	---	
BE00	---	
BF00	---	
C001	Timeout occurred with access request sent to server due to incorrect server address, network disconnection, or inactive server.	2-74
C002	User authentication is unavailable due to incorrect user name, incorrect password, or asynchronous date and time between the machine and server.	2-74
C003	Access to a file is unavailable due to incorrect directory name, no write permission on directory, file write lock, or no write permission on file.	2-74
C004	The current time necessary for user authentication is unavailable due to time not being obtained.	2-74

Error Codes	Description	Refer to:
C700	The memory is insufficient to expand the data of PC-Print.	2-75
C800	The memory used to store secure print data exceeded the memory size for secure print data.	2-75
C900	---	
CA00	---	
D100	---	
D200	---	
D800	Error occurred during touch panel initialization.	2-76
D900	Communication between the panel PCB and main PCB is unavailable during touch panel initialization.	2-76
DA00	After the initialization of the panel PCB, no response was sent from the panel PCB for a period of time.	2-76
DB00	USB communication between the main PCB and panel PCB is unavailable.	2-76
E000	Some ROM checksum error occurred.	2-77
E100	Program error.	2-77
E400	---	
E500	Error occurred when DRAM on the main PCB ASSY was accessed.	2-77
E600	Error occurred during writing to EEPROM on the main PCB ASSY.	2-77
E701	---	
E702	Error occurred during reading from the flash ROM on the main PCB.	2-77
E900	---	
EC00	Overcurrent was caused because a USB device that did not meet the specifications was inserted into the USB port.	2-77

Error Codes	Description	Refer to:
F900	Setting by spec code is not entered.	2-78
FA01	---	
FA02	---	
FA03	---	
FB01	---	
FB02	---	
FB03	---	
FB04	---	
FB05	---	
FB06	---	
FB07	---	
FB08	---	
FB09	---	
FB0A	---	
FB0B	---	
FB0C	---	
FB0D	---	
FB0F	---	
FC01	---	
FC02	---	
FC03	---	
FC04	---	
FC05	---	

Confidential

3.2 Error Message

The error messages displayed on the LCD of the machine and their description are shown in the table below.

■ **Model without touch panel**

Error Message		State	Error Codes	Refer to:
1st line	2nd line			
Access Denied	**Function Locked.**	In the case of PC-print, authentication of print restricted ID failed.	---	4.10.3
	Function Locked. Job Deleted. Press Go.		---	4.10.3
	Function Locked. Press Go.		---	4.10.3
Access Error	**Press Cancel. Put the device back in and try again**	The USB flash memory is taken out while data is being processed.	---	4.11.2
Belt End Soon	**-**	Number of pages printed with the belt unit will reach the upper limit soon.	4300	2-48
Calibrate	**Calibration failed. Insufficient Toner for Calibration.**	Dot counter or develop roller counter of color toner has reached the upper limit during color density adjustment performed from the control panel.	9802	2-70
	Calibration failed. Press Go, and try again.	Density patch measurement ended unsuccessfully during color density adjustment performed from the control panel.	9803	2-71
		Error occurred with the value measured during density sensor sensitivity calibration.	9804	2-71
	Calibration failed. Turn the power off and then back on again.	Error occurred with the value measured during color density adjustment performed from the control panel.	9801	2-70

Confidential

Error Message		State	Error Codes	Refer to:
1st line	2nd line			
Cartridge Error	**Put the Black (BK) Toner Cartridge back in.**	The new toner sensor of the toner cartridge (Black) could not detect a new cartridge properly.	4F01	2-51
	Put the Cyan (C) Toner Cartridge back in.	The new toner sensor of the toner cartridge (Cyan) could not detect a new cartridge properly.	4F04	2-51
	Put the Magenta (M) Toner Cartridge back in.	The new toner sensor of the toner cartridge (Magenta) could not detect a new cartridge properly.	4F03	2-51
	Put the Yellow (Y) Toner Cartridge back in.	The new toner sensor of the toner cartridge (Yellow) could not detect a new cartridge properly.	4F02	2-51
Condensation	**Turn the power switch off and open the Front Cover. Wait 30 minutes, and then turn it on again.**	Condensation occurred in the machine.	1400	2-46
Cooling Down	**Wait for a while**	The internal temperature sensor or side thermistor of the fuser unit detected a temperature higher than the specified value.	6801	2-57
Cover is Open	**Close the Front Cover.**	The front cover sensor detected that the front cover was open.	6001	2-53
	Close the Fuser Cover which can be found behind the Back Cover of the machine.	The eject sensor detected that the fuser cover was open.	6004	2-53
DIMM Error	**-**	Faulty DIMM is installed or DIMM is not properly installed.	---	4.10.1
Direct Print	**No File**	Neither files nor directories exist in the USB flash memory.	---	4.11.2
Drum !	**Slide the Blue tab on Drum Unit.**	Electric discharge that may be caused by dirt on the corona wire of the drum unit was detected.	6A00	2-58
Drum End Soon	**-**	Number of the drum unit rotations reaches the upper limit soon.	4000	2-47
Drum Stop	**Replace the Drum Unit.**	Electric discharge was detected when the number of the drum unit rotations had become more than twice of the upper limit.	6B01	2-58

Confidential

Error Message		State	Error Codes	Refer to:
1st line	2nd line			
Ignore Data	-	Undecodable data is found during printing. Undecodable PS data is received.	---	4.11.1
Jam 2-sided	**Pull out Tray 1 completely. Check inside the machine or open the Back Cover to remove the jammed paper.**	After the first side is printed in 2-sided printing mode, the registration front sensor does not detect paper pass after a set period of time.	7700	2-63
Jam Inside	**Open the Front Cover, pull out the Drum Unit completely and remove the jammed paper.**	After the registration rear sensor detects paper pass, the eject sensor does not detect paper pass.	7000	2-59
Jam MP Tray	**Remove the jammed paper from Multi Purpose Tray and press Go.**	When the paper is fed from the MP tray, after the MP registration front sensor detects paper pass, the registration rear sensor does not detect paper pass after a set period of time.	7200	2-61
Jam Rear	**Open the Back Cover and remove the jammed paper, then press Go.**	After the registration rear sensor detects the end of paper pass and the specified period of time has passed, the eject sensor continues to detect paper pass.	7100	2-60
Jam Tray 1	**Remove the jammed paper from Tray 1.**	In the case of printing by feeding paper from the paper tray 1, after the T1 paper feed sensor detects paper pass, the registration front sensor does not detect paper pass after a set period of time.	7300	2-62
Jam Tray 2	**Remove the jammed paper from Tray 2.**	In the case of printing by feeding paper from the T2 paper tray unit, after the T2 paper feed sensor detects paper pass, the registration front sensor does not detect paper pass after a set period of time.	7400	2-62

Confidential

Error Message		State	Error Codes	Refer to:
1st line	2nd line			
Limit Exceeded	**Function Locked**	In the case of PC-print, the maximum number of pages that can be printed is exceeded.	---	4.11.1
	Function Locked. Job Deleted. Press Go.	In the case of Secure print, the maximum number of pages that can be printed is exceeded.	---	4.11.1
	Function Locked. Press Go.	In the case of USB Direct print, the maximum number of pages that can be printed is exceeded.	---	4.11.1
Log Access Error	**Authentication Error, contact your administrator.**	User authentication is unavailable due to incorrect user name, incorrect password, or asynchronous date and time between the machine and server.	C002	2-74
	File Access Error, contact your administrator.	Access to a file is unavailable due to incorrect directory name, no write permission on directory, file write lock, or no write permission on file.	C003	2-74
	Server Timeout, contact your administrator.	Timeout occurred with access request sent to server due to incorrect server address, network disconnection, or inactive server.	C001	2-74
	Wrong Date &Time, contact your administrator.	The current time necessary for user authentication is unavailable due to time not being obtained.	C004	2-74
Machine Error **		Some kind of machine error occurred. Refer to the error code of "**".	**	
No Belt Unit	**Open the Front Cover, pull out the Drum Unit completely and install the Belt Unit.**	The registration mark sensor detected that no belt unit was set.	6400	2-56
No Drum Unit	**Install the Drum Unit.**	The current value between the CHG and GRID terminals and the toner sensor detected that there were no toner cartridges of any colors and detected that the drum unit was not set.	6200	2-54
No HUB Support	**-**	USB HOST HUB connection error	---	4.11.2

Confidential

Error Message		State	Error Codes	Refer to:
1st line	2nd line			
No Paper	**Load #S paper in #T.**	When paper was fed from the MP tray, the MP paper empty sensor detected that no paper was in the MP tray.	9301	2-67
		When paper was fed from the paper tray 1, the T1 paper feed sensor detected that no paper was in the paper tray 1.	9302	2-67
		When paper was fed from the T2 paper tray unit, the T2 paper feed sensor detected that no paper was in the T2 paper tray unit.	9303	2-68
		For printing specifying Auto, it was detected that no paper was loaded in any of the paper trays.	9306	2-68
No Permission	**Function Locked**	In the case of PC-print, the ID which does not have permission to perform color printing was used.	---	4.10.3
	Function Locked. Press Go.	In the case of Secure print or USB Direct print, the ID which does not have permission to perform color printing was used.	---	4.10.3
No Toner	**Open the Front Cover, then install Toner Cartridge. Black (BK).**	The toner sensor detected that no toner cartridge (Black) was set.	6101	2-54
	Open the Front Cover, then install Toner Cartridge. Cyan (C).	The toner sensor detected that no toner cartridge (Cyan) was set.	6104	2-54
	Open the Front Cover, then install Toner Cartridge. Magenta (M).	The toner sensor detected that no toner cartridge (Magenta) was set.	6103	2-54
	Open the Front Cover, then install Toner Cartridge. Yellow (Y).	The toner sensor detected that no toner cartridge (Yellow) was set.	6102	2-54

Error Message		State	Error Codes	Refer to:
1st line	2nd line			
No Tray	**Reinstall tray 1**	The T1 paper feed sensor detected that the paper tray 1 is open in 2-sided printing or printing by feeding paper from the T2 paper tray unit. (after the registration of printing in the engine)	8505	2-64
		The T1 paper feed sensor detected that the paper tray 1 is open in 2-sided printing or printing by feeding paper from the T2 paper tray unit. (before the registration of printing in the engine)	8501	2-64
	The paper tray cannot be detected, re-install #T.	While the T2 paper tray unit is open state, print or adjustment operation was attempted.	8402	2-63
No Waste Toner	**Install the Waste Toner Box.**	The waste toner sensor detected that no waste toner box was set.	6300	2-56
Not Available	**-**	The function is not available for any IDs.	---	4.10.3
Out of Memory	**Press Cancel**	The memory is insufficient to expand the data of PC-Print.	C700	2-75
	Turn the power off, and then on again.	The program update process cannot be performed because the memory is insufficient.	---	4.10.2
Print Data Full	**Print Data is full. Press Cancel and delete the previously stored data.**	The memory used to store secure print data exceeded the memory size for secure print data.	C800	2-75
Prinit Unable **		Error related to print Refer to the error code of "**".	**	
Registration	**Registration failed. Insufficient Toner for Registration.**	Dot counter or develop roller counter of color toner has reached the upper limit during auto color registration performed from the control panel.	9A02	2-72
	Registration failed. Press Go, and try again.	Error occurred during patch data printing in auto color registration performed from the control panel.	9A03	2-73
	Registration failed. Turn the power off and then back on again.	Error occurred with the value measured during auto color registration performed from the control panel.	9A01	2-72

Confidential

Error Message		State	Error Codes	Refer to:
1st line	2nd line			
Replace Belt	-	Number of pages printed with the belt unit has reached the upper limit.	4400	2-48
Replace Fuser	-	Number of used pages for the fuser unit has reached the upper limit.	4500	2-48
Replace Laser	-	Number of pages printed with the laser unit has reached the upper limit.	4600	2-48
Replace Drum	-	Number of the drum unit rotations has reached the upper limit.	4200	2-47
Replace PF Kit1	-	Number of used pages for the PF kit 1 has reached the upper limit.	5002	2-52
Replace PF Kit2	-	Number of used pages for the PF kit 2 has reached the upper limit.	5003	2-52
Replace PF Kit MP	-	Number of used pages for the PF kit MP has reached the upper limit.	5001	2-52
Replace Toner	**Open the Top Cover, replace Toner Cartridge. Black (BK).**	Dot counter of the toner cartridge (Black) or develop roller counter has reached the upper limit was detected.	4C01	2-50
	Open the Top Cover, replace Toner Cartridge. Cyan (C).	Dot counter of the toner cartridge (Cyan) or develop roller counter has reached the upper limit was detected.	4C04	2-50
	Open the Top Cover, replace Toner Cartridge. Cyan (C)/ Magenta (M)/ Yellow (Y).	During printing, dot counter of color toner cartridge or develop roller counter has reached the upper limit was detected.	4C05	2-50
	Open the Top Cover, replace Toner Cartridge. Magenta (M).	Dot counter of the toner cartridge (Magenta) or develop roller counter has reached the upper limit was detected.	4C03	2-50
	Open the Top Cover, replace Toner Cartridge. Yellow (Y).	Dot counter of the toner cartridge (Yellow) or develop roller counter has reached the upper limit was detected.	4C02	2-50
Replace WT Box	**Replace the Waste Toner Box inside the machine.**	After the waste toner sensor detected that the waste toner box was almost full, pages more than the specified number have been printed.	4800	2-49

Error Message		State	Error Codes	Refer to:
1st line	2nd line			
Self-Diagnostic	**Turn the power off, then on again. Leave the machine for 15 min.**	Some fuser unit errors occurred at power-ON or upon recovery from sleep mode.	6901	2-57
	Will Automatically Restart within 15 minutes.	After the error was detected at the fuser unit, power was turned ON again and the error is being checked. (If power is turned OFF and ON after error code 6901 occurred, this code is displayed for about 15 minutes.)	6902	2-57
Short paper	**Open the Back Cover and then press Go.**	The registration rear sensor detected that the paper loaded in the paper tray was smaller than the specified size.	8D01	2-65
Size Error	**Specify the correct paper size for Tray 1.**	For printing by feeding paper from the paper tray 1, the size of paper specified from the driver set the size which was not supported by the paper tray 1.	9702	2-69
	Specify the correct paper size for Tray 2.	For printing by feeding paper from the T2 paper tray unit, the size of paper specified from the driver set the size which was not supported by the T2 paper tray unit.	9703	2-69
Size Error DX	**Press Cancel. Specify the correct paper and load the same size paper as the Printer driver setting.**	For 2-sided printing, the tray whose paper size was not supported by 2-sided printing was selected.	9701	2-69
	Specify the correct paper and press Go.	The registration rear sensor detected that the fed paper was larger or smaller than the specified size in 2-sided printing.	8A01	2-65

Confidential

Error Message		State	Error Codes	Refer to:
1st line	2nd line			
Size Mismatch	**Load #S paper and press Go.**	The size of paper loaded in the paper tray 1 and the one specified from the driver are not same when paper is fed from the paper tray 1.	9002	2-66
	Load #S paper in #T and press Go.	The size of paper loaded in the MP tray and the one specified from the driver are not same when paper is fed from the MP tray.	9001	2-66
		The size of paper loaded in the T2 paper tray unit and the one specified from the driver are not same when paper is fed from the T2 paper tray unit.	9003	2-66
Small paper	**Open the Back Cover and then press Go.**	The paper size which is not supported by the output tray is set for printing from the printer driver.	8D02	2-66
Table Print	**Change Emulation**	While Emulation is fixed to PS, Table Print was performed.	---	4.11.1
Toner Error	**One or more Toner Cartridges are not detected. Pull out and reinsert all 4 Toner Cartridges.**	The develop release sensor detected the developer roller disengagement or engagement failure.	6E00	2-59
Toner Low: BK	-	Dot counter of the toner cartridge (Black) or develop roller counter reaches the upper limit soon.	4B01	2-49
Toner Low: C	-	Dot counter of the toner cartridge (Cyan) or develop roller counter reaches the upper limit soon.	4B04	2-49
Toner Low: M	-	Dot counter of the toner cartridge (Magenta) or develop roller counter reaches the upper limit soon.	4B03	2-49
Toner Low: Y	-	Dot counter of the toner cartridge (Yellow) or develop roller counter reaches the upper limit soon.	4B02	2-49
Tray 2 Error	**Take out Tray 2 and push it back in firmly.**	After the T2 paper tray unit is opened and closed or the power is turned ON, the T2 plate origin sensor detects that lift-up of the plate of the T2 paper tray unit is not completed within the specified period of time.	6C02	2-58

Confidential

Error Message		State	Error Codes	Refer to:
1st line	2nd line			
Unable to Update	**Press Stop.Wait until Ready state and try again.**	Execution of the program update cannot be started because other function is being executed.	---	4.11.3
Unusable Device	**-**	An USB device that did not meet the specifications was inserted into the USB port.	---	4.11.2
	Remove the Device. Turn the power off and back on again.	Overcurrent was caused because a USB device that did not meet the specifications was inserted into the USB port.	EC00	2-77
Unusable File	**Press Stop.Check the firmware file in the device and try again.**	The update process cannot be continued because the data of the program file is incorrect.	---	4.11.1
WT Box End Soon	**-**	The waste toner sensor detected that the waste toner box is almost full.	4700	2-49
2-sided Disabled	**Close the Back Cover of the machine.**	The back cover sensor detected the open state when 2-sided printing is started. (before the registration of printing in the engine)	8903	2-64
		The back cover sensor detected the open state during 2-sided printing. (after the registration of printing in the engine)	8904	2-64
	Load #S paper and press Go.	The registration rear sensor detected that the length of the paper is too long and it may hit within the machine in 2-sided printing.	8A02	2-65

Confidential

■ **Model with touch panel**

Error Message		State	Error Codes	Refer to:
Upper line	Middle line			
Access Denied	**Function Locked.**	In the case of PC-print, authentication of print restricted ID failed.	---	4.10.3
	Function Locked. Job Deleted.		---	4.10.3
Calibration	**Calibration failed. Insufficient Toner for Calibration.**	Dot counter or develop roller counter of color toner has reached the upper limit during color density adjustment performed from the control panel.	9802	2-70
	Calibration failed. Press [Retry], and try again.	Density patch measurement ended unsuccessfully during color density adjustment performed from the control panel.	9803	2-71
		Error occurred with the value measured during density sensor sensitivity calibration.	9804	2-71
	Calibration failed. Turn the power off and then back on	Error occurred with the value measured during color density adjustment performed from the control panel.	9801	2-70
Cartridge Error	**Put the Black (BK) Toner Cartridge back in.**	The new toner sensor of the toner cartridge (Black) could not detect a new cartridge properly.	4F01	2-51
	Put the Cyan (C) Toner Cartridge back in.	The new toner sensor of the toner cartridge (Cyan) could not detect a new cartridge properly.	4F04	2-51
	Put the Magenta (M) Toner Cartridge back in.	The new toner sensor of the toner cartridge (Magenta) could not detect a new cartridge properly.	4F03	2-51
	Put the Yellow (Y) Toner Cartridge back in.	The new toner sensor of the toner cartridge (Yellow) could not detect a new cartridge properly.	4F02	2-51
Condensation	**Leave switched ON. Fully open the front cover. Wait**	Condensation occurred in the machine.	1400	2-46
Cooling Down	**Wait for a while**	The internal temperature sensor or side thermistor of the fuser unit detected a temperature higher than the specified value.	6801	2-57
Cover is Open	**Cover is Open**	The front cover sensor detected that the front cover was open.	6001	2-53
		The eject sensor detected that the fuser cover was open.	6004	2-53

Error Message		State	Error Codes	Refer to:
Upper line	Middle line			
Drum !	**-**	Electric discharge that may be caused by dirt on the corona wire of the drum unit was detected.	6A00	2-59
Drum Stop	**Replace the Drum Unit.**	Electric discharge was detected when the number of the drum unit rotations had become more than twice of the upper limit.	6B01	2-58
Ignore Data	**Ignore Data**	Undecodable data is found during printing.	---	4.11.1
	Press Stop[x].	Undecodable PS data is received.	---	4.11.1
Jam 2-sided	**-**	After the first side is printed in 2-sided printing mode, the registration front sensor does not detect paper pass after a set period of time.	7700	2-63
Jam Inside	**-**	After the registration rear sensor detects paper pass, the eject sensor does not detect paper pass.	7000	2-59
Jam MP Tray	**-**	When the paper is fed from the MP tray, after the MP registration front sensor detects paper pass, the registration rear sensor does not detect paper pass after a set period of time.	7200	2-61
Jam Rear	**-**	After the registration rear sensor detects the end of paper pass and the specified period of time has passed, the eject sensor continues to detect paper pass.	7100	2-60
Jam Tray 1	**-**	In the case of printing by feeding paper from the paper tray 1, after the T1 paper feed sensor detects paper pass, the registration front sensor does not detect paper pass after a set period of time.	7300	2-62
Jam Tray 2	**-**	In the case of printing by feeding paper from the T2 paper tray unit, after the T2 paper feed sensor detects paper pass, the registration front sensor does not detect paper pass after a set period of time.	7400	2-62
Limit Exceeded	**Cancel printing.**	The maximum number of pages that can be printed is exceeded.	---	4.11.1

Confidential

Error Message		State	Error Codes	Refer to:
Upper line	Middle line			
Log Access Error	**Authentication error, contact your administrator.**	User authentication is unavailable due to incorrect user name, incorrect password, or asynchronous date and time between the machine and server.	C002	2-74
		Access to a file is unavailable due to incorrect directory name, no write permission on directory, file write lock, or no write permission on file.	C003	2-74
	Server timeout, contact your administrator.	Timeout occurred with access request sent to server due to incorrect server address, network disconnection, or inactive server.	C001	2-74
	Wrong Date & Time, contact your administrator.	The current time necessary for user authentication is unavailable due to time not being obtained.	C004	2-74
Maintenance	**Replace Fuser**	Number of used pages for the fuser unit has reached the upper limit.	4500	2-48
	Replace Laser	Number of pages printed with the laser unit has reached the upper limit.	4600	2-48
	Replace PF Kit 1	Number of used pages for the PF kit 1 has reached the upper limit.	5002	2-52
	Replace PF Kit 2	Number of used pages for the PF kit 2 has reached the upper limit.	5003	2-52
	Replace PF Kit MP	Number of used pages for the PF kit MP has reached the upper limit.	5001	2-52
No Belt Unit	**Open the Front Cover, pull out the Drum Units completely and install the Belt Unit.**	The registration mark sensor detected that no belt unit was set.	6400	2-56
No Drum Unit	**Install the Drum Unit.**	The current value between the CHG and GRID terminals and the toner sensor detected that there were no toner cartridges of any colors and detected that the drum unit was not set.	6200	2-54
No HUB Support	**No HUB Support.**	USB HOST HUB connection error	---	4.11.2

Confidential

Error Message		State	Error Codes	Refer to:
Upper line	Middle line			
No Paper	**-**	When paper was fed from the MP tray, the MP paper empty sensor detected that no paper was in the MP tray.	9301	2-67
		For printing specifying Auto, it was detected that no paper was loaded in any of the paper trays.	9306	2-70
No Paper T1	**-**	When paper was fed from the paper tray 1, the T1 paper feed sensor detected that no paper was in the paper tray 1.	9302	2-67
No Paper T2	**-**	When paper was fed from the T2 paper tray unit, the T2 paper feed sensor detected that no paper was in the T2 paper tray unit.	9303	2-68
No Permission	**Function Locked**	In the case of PC-print, the ID which does not have permission to perform color printing was used.	---	4.10.3
	Function Locked. Job Deleted. Press Stop[x].	In the case of Secure print or USB Direct print, the ID which does not have permission to perform color printing was used.	---	4.10.3
No Toner	**Open the Front Cover, then install Toner Cartridge. Black (BK).**	The toner sensor detected that no toner cartridge (Black) was set.	6101	2-54
	Open the Front Cover, then install Toner Cartridge. Cyan (C).	The toner sensor detected that no toner cartridge (Cyan) was set.	6104	2-54
	Open the Front Cover, then install Toner Cartridge. Magenta (M).	The toner sensor detected that no toner cartridge (Magenta) was set.	6103	2-54
	Open the Front Cover, then install Toner Cartridge. Yellow (Y).	The toner sensor detected that no toner cartridge (Yellow) was set.	6102	2-54
No Tray	**-**	While the T2 paper tray unit is open state, print or adjustment operation was attempted.	8402	2-63

Confidential

Error Message		State	Error Codes	Refer to:
Upper line	Middle line			
No Tray T1	**-**	The T1 paper feed sensor detected that the paper tray 1 is open in 2-sided printing or printing by feeding paper from the T2 paper tray unit. (after the registration of printing in the engine)	8505	2-64
		The T1 paper feed sensor detected that the paper tray 1 is open in 2-sided printing or printing by feeding paper from the T2 paper tray unit. (before the registration of printing in the engine)	8501	2-64
No Waste Toner	**Install the Waste Toner Box.**	The waste toner sensor detected that no waste toner box was set.	6300	2-56
Out of Memory	**Press Stop [x].**	The memory is insufficient to expand the data of PC-Print.	C700	2-75
Print Data Full	**Secure Print Data is full. Press Stop [x] and delete the previously stored data.**	The memory used to store secure print data exceeded the memory size for secure print data.	C800	2-75
Prinit Unable **	**Turn the power off and then back on again.**	Error related to print Refer to the error code of "**".	**	
Registration	**Registration failed. Insufficient Toner for Registration.**	Dot counter or develop roller counter of color toner has reached the upper limit during auto color registration performed from the control panel.	9A02	2-72
	Registration failed. Press [Retry], and try again.	Error occurred during patch data printing in auto color registration performed from the control panel.	9A03	2-73
	Registration failed. Turn the power off and then back on again.	Error occurred with the value measured during auto color registration performed from the control panel.	9A01	2-72

Error Message		State	Error Codes	Refer to:
Upper line	Middle line			
Replace Toner	-	Dot counter of the toner cartridge (Black) or develop roller counter has reached the upper limit was detected.	4C01	2-50
		Dot counter of the toner cartridge (Cyan) or develop roller counter has reached the upper limit was detected.	4C04	2-50
		During printing, dot counter of color toner cartridge or develop roller counter has reached the upper limit was detected.	4C05	2-50
		Dot counter of the toner cartridge (Magenta) or develop roller counter has reached the upper limit was detected.	4C03	2-50
		Dot counter of the toner cartridge (Yellow) or develop roller counter has reached the upper limit was detected.	4C02	2-50
Replace WT Box	**Replace the Waste Toner Box inside the machine.**	After the waste toner sensor detected that the waste toner box was almost full, pages more than the specified number have been printed.	4800	2-49
Self-Diagnostic	**Turn the power off, then on again. Leave the machine for 15 min.**	Some fuser unit errors occurred at power-ON or upon recovery from sleep mode.	6901	2-57
	Will Automatically Restart within 15 minutes.	After the error was detected at the fuser unit, power was turned ON again and the error is being checked. (If power is turned OFF and ON after error code 6901 occurred, this code is displayed for about 15 minutes.)	6902	2-57
Short paper	**Open the Back Cover and then press [Retry].**	The registration rear sensor detected that the paper loaded in the paper tray was smaller than the specified size.	8D01	2-65

Confidential

Error Message		State	Error Codes	Refer to:
Upper line	Middle line			
Size Error	**Specify the correct paper size for Tray 1.**	For printing by feeding paper from the paper tray 1, the size of paper specified from the driver set the size which was not supported by the paper tray 1.	9702	2-69
	Specify the correct paper size for Tray 2.	For printing by feeding paper from the T2 paper tray unit, the size of paper specified from the driver set the size which was not supported by the T2 paper tray unit.	9703	2-69
Size Error 2-sided	**Press Stop[x]. Specify the correct paper and load the same size paper as the Printer driver setting.**	For 2-sided printing, the tray whose paper size was not supported by 2-sided printing was selected.	9701	2-69
	Specify the correct paper and press [Retry].	The registration rear sensor detected that the fed paper was larger or smaller than the specified size in 2-sided printing.	8A01	2-65
Size Mismatch	**Reload correct paper in Tray1, then press [Retry].**	The size of paper loaded in the paper tray 1 and the one specified from the driver are not same when paper is fed from the paper tray 1.	9002	2-66
	Reload correct paper in MP Tray, then press [Retry].	The size of paper loaded in the MP tray and the one specified from the driver are not same when paper is fed from the MP tray.	9001	2-66
	Reload correct paper in Tray2, then press [Retry].	The size of paper loaded in the T2 paper tray unit and the one specified from the driver are not same when paper is fed from the T2 paper tray unit.	9003	2-66
Small paper	**Open the Back Cover and then press [Retry].**	The paper size which is not supported by the output tray is set for printing from the printer driver.	8D02	2-66

Error Message		State	Error Codes	Refer to:
Upper line	Middle line			
Supplies	**Belt End Soon**	Number of pages printed with the belt unit will reach the upper limit soon.	4300	2-48
	Drum End Soon.	Number of the drum unit rotations reaches the upper limit soon.	4000	2-47
	Replace Belt	Number of pages printed with the belt unit has reached the upper limit.	4400	2-48
	Replace Drum	Number of the drum unit rotations has reached the upper limit.	4200	2-47
	Toner Low	Dot counter of the toner cartridge (Black) or develop roller counter reaches the upper limit soon.	4B01	2-49
		Dot counter of the toner cartridge (Cyan) or develop roller counter reaches the upper limit soon.	4B04	2-49
		Dot counter of the toner cartridge (Magenta) or develop roller counter reaches the upper limit soon.	4B03	2-49
		Dot counter of the toner cartridge (Yellow) or develop roller counter reaches the upper limit soon.	4B02	2-49
	WT Box End Soon	The waste toner sensor detected that the waste toner box is almost full.	4700	2-49
Toner Error	**One or more Toner Cartridges are not detected. Pull out and reinsert all 4 Toner Cartridges.**	The develop release sensor detected the developer roller disengagement or engagement failure.	6E00	2-59
Touchscreen initialization failed	**Remove any material which is on the touchscreen.**	Error occurred during touch panel initialization.	D800	2-76
Tray 2 Error	**Take out Tray 2 and push it back in firmly.**	After the T2 paper tray unit is opened and closed or the power is turned ON, the T2 plate origin sensor detects that lift-up of the plate of the T2 paper tray unit is not completed within the specified period of time.	6C02	2-58
Unable to Update	**Press Stop[x].Wait until Ready state and try again.**	Execution of the program update cannot be started because other function is being executed.	---	4.11.3

Error Message		State	Error Codes	Refer to:
Upper line	Middle line			
Unusable Device	**Unusable Device**	An USB device that did not meet the specifications was inserted into the USB port.	---	4.11.2
	Remove the Device. Turn the power off and back on again.	Overcurrent was caused because a USB device that did not meet the specifications was inserted into the USB port.	EC00	2-77
2-sided Disabled	**-**	The back cover sensor detected the open state when 2-sided printing is started. (before the registration of printing in the engine)	8903	2-64
		The back cover sensor detected the open state during 2-sided printing. (after the registration of printing in the engine)	8904	2-64
	Reload paper, then press [Retry].	The registration rear sensor detected that the length of the paper is too long and it may hit within the machine in 2-sided printing.	8A02	2-65

4. TROUBLESHOOTING

4.1 Error Cause and Remedy

Note:
This page shows LCD display for models without touch panel. It may differ from display shown on models with touch panel.

■ Error code 0100

Print Unable 01
Turn the power off and then back on again.

ASIC error or motor driver error occurred.

Step	Cause	Remedy
1	Main PCB failure	Replace the main PCB ASSY.

■ Error code 0201

Print Unable 02
Turn the power off and then back on again.

Synchronization signal from the main motor cannot be detected. Or the main motor speed is unstable after a set period of time.

Step	Cause	Remedy
1	Connection failure of the main motor harness	Reconnect the main motor harness.
2	Connection failure of the low-voltage power supply PCB harness	Reconnect the low-voltage power supply PCB harness.
3	Part in the process drive unit damaged	Replace the process drive unit.
4	Fuser unit damaged	Replace the fuser unit.
5	Low-voltage power supply PCB failure	Replace the low-voltage power supply PCB unit.
6	Main PCB failure	Replace the main PCB ASSY.

■ Error code 0202

Print Unable 02
Turn the power off and then back on again.

Synchronization signal from the process motor cannot be detected. Or the process motor speed is unstable after a set period of time.

Step	Cause	Remedy
1	Connection failure of the process motor harness	Reconnect the process motor harness.
2	Connection failure of the low-voltage power supply PCB harness	Reconnect the low-voltage power supply PCB harness.
3	Part in the process drive unit damaged	Replace the process drive unit.
4	Low-voltage power supply PCB failure	Replace the low-voltage power supply PCB unit.
5	Main PCB failure	Replace the main PCB ASSY.

Confidential

■ Error code 0300

Print Unable 03
Turn the power off and then back on again.

The Lock signal of the polygon motor of the laser unit cannot be detected.

Error code 0401

Print Unable 04
Turn the power off and then back on again.

BD sensor 1 damaged.

Error code 0402

Print Unable 04
Turn the power off and then back on again.

BD sensor 4 damaged.

Step	Cause	Remedy
1	Connection failure of the polygon motor harness	Reconnect the polygon motor harness.
2	Laser unit failure	Replace the laser unit.
3	Main PCB failure	Replace the main PCB ASSY.

■ **Error code 0501**

Print Unable 05
Turn the power off and then back on again.

The center thermistor of the fuser unit does not reach the specified temperature within the specified time.

Error code 0502

Print Unable 05
Turn the power off and then back on again.

After the temperature of the fuser unit rises to a certain level, the temperature of the center thermistor does not reach the specified temperature within the specified period of time in the next step.

Error code 0503

Print Unable 05
Turn the power off and then back on again.

The center thermistor of the fuser unit detected a temperature higher than the specified value.

Error code 0504

Print Unable 05
Turn the power off and then back on again.

After the center thermistor of the fuser unit was normally heated, it detected a temperature lower than the specified value.

Error code 0505

Print Unable 05
Turn the power off and then back on again.

The center thermistor of the fuser unit detected a temperature rise greater than the specified value within a set period of time.

Error code 0506

Print Unable 05
Turn the power off and then back on again.

The center thermistor of the fuser unit detected a temperature fall greater than the specified value within a set period of time.

< User Check >

- Turn OFF the power switch. After several seconds, turn ON the power again and check that this error is reset.

Step	Cause	Remedy
1	Connection failure of the center or side thermistor harness of the fuser unit	Reconnect the harness of the center thermistor or side thermistor of the fuser unit.
2	Connection failure of the heater harness of the fuser unit	Reconnect the heater harness of the fuser unit.
3	Connection failure of the eject sensor PCB harness	Reconnect the eject sensor PCB harness.
4	Connection failure of the low-voltage power supply PCB harness	Reconnect the low-voltage power supply PCB harness.
5	Eject sensor PCB failure	Replace the eject sensor PCB ASSY.
6	Fuser unit failure	Replace the fuser unit.
7	Low-voltage power supply PCB failure	Replace the low-voltage power supply PCB unit.
8	Main PCB failure	Replace the main PCB ASSY.

■ **Error code 050A**

Print Unable 05
Turn the power off and then back on again.

The center thermistor or side thermistor of the fuser unit detected some temperature error in the hardware.

Error code 050B

Print Unable 05
Turn the power off and then back on again.

When the temperature of the center thermistor of the fuser unit is lower than the idle temperature, the side thermistor of the fuser unit detected a temperature higher than the specified value.

Error code 050C

Print Unable 05
Turn the power off and then back on again.

When the temperature of the center thermistor of the fuser unit is higher than the idle temperature, the side thermistor of the fuser unit detected a temperature lower than the specified value.

< User Check >

- Turn OFF the power switch. After several seconds, turn ON the power again and check that this error is reset.

Step	Cause	Remedy
1	Connection failure of the center or side thermistor harness of the fuser unit	Reconnect the harness of the center thermistor or side thermistor of the fuser unit.
2	Connection failure of the heater harness of the fuser unit	Reconnect the heater harness of the fuser unit.
3	Connection failure of the eject sensor PCB harness	Reconnect the eject sensor PCB harness.
4	Connection failure of the low-voltage power supply PCB harness	Reconnect the low-voltage power supply PCB harness.
5	Eject sensor PCB failure	Replace the eject sensor PCB ASSY.
6	Fuser unit failure	Replace the fuser unit.
7	Low-voltage power supply PCB failure	Replace the low-voltage power supply PCB unit.
8	Main PCB failure	Replace the main PCB ASSY.

■ Error code 0800

Print Unable 08
Turn the power off and then back on again.

Error occurred in the internal temperature sensor.

Step	Cause	Remedy
1	Connection failure of the internal temperature sensor harness	Reconnect the internal temperature sensor harness.
2	Main PCB failure	Replace the main PCB ASSY.

■ Error code 0900

Print Unable 09
Turn the power off and then back on again.

Machine detected more than 100 times that supplied power was unstable.

< User Check >

- Turn OFF the power switch. After several seconds, turn ON the power again and check that this error is reset.

Step	Cause	Remedy
1	Low-voltage power supply PCB failure	Replace the low-voltage power supply PCB unit. After replacing the low-voltage power supply PCB unit, refer to "1.3.29 Reset counters for parts (Function code 88)" in Chapter 5, and reset the irregular power supply detection counter of the low-voltage power supply PCB unit.
2	Main PCB failure	Replace the main PCB ASSY.

Note:
The irregular power supply detection error (Error code 0900) of the low-voltage power supply PCB unit occurs when there is a large distortion in the power supply voltage supplied to the machine. In this case, if the same power supply is used, the same error might occur again even if the low-voltage power supply PCB unit is replaced.
For this reason, be sure to ask the user to rearrange the installation environment.

■ Error code 0A01

Print Unable 0A
Turn the power off and then back on again.

The blower failure was detected.

Step	Cause	Remedy
1	Connection failure of the blower harness	Reconnect the blower harness.
2	Connection failure of the high-voltage power supply PCB harness	Reconnect the high-voltage power supply PCB harness.
3	Blower failure	Replace the blower.
4	Low-voltage power supply PCB failure	Replace the low-voltage power supply PCB unit.
5	High-voltage power supply PCB failure	Replace the high-voltage power supply PCB ASSY.
6	Main PCB failure	Replace the main PCB ASSY.

■ Error code 0A02

Print Unable 0A
Turn the power off and then back on again.

The fuser fan failure was detected.

Step	Cause	Remedy
1	Connection failure of the fuser fan harness	Reconnect the fuser fan harness.
2	Connection failure of the high-voltage power supply PCB harness	Reconnect the high-voltage power supply PCB harness.
3	Fuser fan failure	Replace the fuser fan.
4	Low-voltage power supply PCB failure	Replace the low-voltage power supply PCB unit.
5	High-voltage power supply PCB failure	Replace the high-voltage power supply PCB ASSY.
6	Main PCB failure	Replace the main PCB ASSY.

■ Error code 0B01

Print Unable 0B
Turn the power off and then back on again.

Error occurred in the high-voltage power supply PCB ASSY while the machine is in operation.

Error code 0B02

Print Unable 0B
Turn the power off and then back on again.

Error occurred in the high-voltage power supply PCB ASSY in the ready state.

Step	Cause	Remedy
1	Connection failure of the high-voltage power supply PCB harness	Reconnect the high-voltage power supply PCB harness.
2	High-voltage power supply PCB failure	Replace the high-voltage power supply PCB ASSY.
3	Main PCB failure	Replace the main PCB ASSY.

■ Error code 0C00

Print Unable 0C
Turn the power off and then back on again.

Error occurred in the density sensor.

Step	Cause	Remedy
1	Connection failure of the registration mark sensor L PCB harness	Reconnect the registration mark sensor L PCB harness.
2	Registration mark sensor L PCB failure	Replace the registration mark sensor unit.
3	Main PCB failure	Replace the main PCB ASSY.

■ Error code 0E00

Print Unable 0E
Turn the power off and then back on again.

Communication error occurred in the high-voltage power supply PCB ASSY.

Step	Cause	Remedy
1	Connection failure of the high-voltage power supply PCB harness	Reconnect the high-voltage power supply PCB harness.
2	High-voltage power supply PCB failure	Replace the high-voltage power supply PCB ASSY.
3	Main PCB failure	Replace the main PCB ASSY.

■ Error code 1003

Print Unable 10
Turn the power off and then back on again.

The registration mark sensor R is dirty and cannot normally receive reflected light.

< User Check >

- Clean the dirt on the belt unit or replace the belt unit.
- Replace the waste toner box.

Step	Cause	Remedy
1	Dirt on the registration mark sensor R	Clean the registration mark sensor R of the registration mark sensor R PCB.
2	Dirt by toner inside the machine	Clean inside of the machine.
3	Registration mark sensor R PCB failure	Replace the registration mark sensor unit.
4	Main PCB failure	Replace the main PCB ASSY.

■ Error code 1004

Print Unable 10
Turn the power off and then back on again.

The registration mark sensor L is dirty and cannot normally receive reflected light.

< User Check >

- Clean the dirt on the belt unit or replace the belt unit.
- Replace the waste toner box.

Step	Cause	Remedy
1	Dirt on the registration mark sensor L	Clean the registration mark sensor L of the registration mark sensor L PCB.
2	Dirt by toner inside the machine	Clean inside of the machine.
3	Registration mark sensor L PCB failure	Replace the registration mark sensor unit.
4	Main PCB failure	Replace the main PCB ASSY.

■ Error code 1400

Condensation
Turn the power switch off and open the Front Cover. Wait 30 minutes, and then turn it on again.

Condensation occurred in the machine.

< User Check >

- Open the front and back covers and leave them for 30 minutes or more with the power ON. After that, close the front and back covers and turn OFF and ON the power switch.

Step	Cause	Remedy
1	Main PCB failure	Replace the main PCB ASSY.
2	Laser unit failure	Replace the laser unit.

■ Error code 1500

Print Unable 15
Turn the power off and then back on again.

Error occurred in the paper eject origin sensor.

Step	Cause	Remedy
1	Connection failure of the paper eject origin sensor harness	Reconnect the paper eject origin sensor harness.
2	Paper eject origin sensor failure	Replace the paper eject origin sensor.
3	Paper eject ASSY failure	Replace the paper eject ASSY.

■ Error code 1C00

Print Unable 1C
Turn the power off and then back on again.

The reading signal of the EEPROM of the laser unit cannot be detected.

Step	Cause	Remedy
1	Connection failure of the laser unit flat cable	Reconnect the laser unit flat cable.
2	Laser unit failure	Replace the laser unit.
3	Main PCB failure	Replace the main PCB ASSY.

■ Error code 3801

Print Unable 38
Turn the power off and then back on again.

Temperature error occurred in the external temperature/humidity sensor.

Error code 3802

Print Unable 38
Turn the power off and then back on again.

Humidity error occurred in the external temperature/humidity sensor.

Step	Cause	Remedy
1	Connection failure of the high-voltage power supply PCB harness	Reconnect the high-voltage power supply PCB harness.
2	External temperature/humidity sensor failure	Replace the high-voltage power supply PCB ASSY.
3	Main PCB failure	Replace the main PCB ASSY.

■ Error code 3A00

Print Unable 3A
Turn the power off and then back on again.

Error occurred in the communication between the controller in the main PCB and engine.

Step	Cause	Remedy
1	Main PCB failure	Replace the main PCB ASSY.

■ Error code 4000

Drum End Soon
-

Number of the drum unit rotations reaches the upper limit soon.

Error code 4200

Replace Drum
-

Number of the drum unit rotations has reached the upper limit. (Printing is not stopped.)

< User Check >

- Prepare a new drum unit.

Step	Cause	Remedy
1	Main PCB failure if the error code remains after replacing with a new drum unit and resetting the drum counter	Replace the main PCB ASSY.

Confidential

■ Error code 4300

Belt End Soon -

Number of pages printed with the belt unit will reach the upper limit soon. (90%)

Error code 4400

Replace Belt -

Number of pages printed with the belt unit has reached the upper limit. (Printing is not stopped.)

< User Check >

- Prepare a new belt unit.

Step	Cause	Remedy
1	Main PCB failure if the error code remains after replacing with a new belt unit and resetting the belt counter	Replace the main PCB ASSY.

■ Error code 4500

Replace Fuser -

Number of used pages for the fuser unit has reached the upper limit. (Printing is not stopped.)

Step	Cause	Remedy
1	The fuser unit is at the end of life	Replace the fuser unit. After replacing the fuser unit, refer to "1.3.29 Reset counters for parts (Function code 88)" in Chapter 5, and reset the fuser unit counter.
2	Main PCB failure if the error code remains after replacing with a new fuser unit and resetting the fuser unit counter	Replace the main PCB ASSY.

■ Error code 4600

Replace Laser -

Number of pages printed with the laser unit has reached the upper limit.

Step	Cause	Remedy
1	The laser unit is at the end of life	Replace the laser unit. After replacing the laser unit, refer to "1.3.29 Reset counters for parts (Function code 88)" in Chapter 5, and reset the laser unit counter.
2	Main PCB failure if the error code remains after replacing with a new laser unit and resetting the laser unit counter	Replace the main PCB ASSY.

■ Error code 4700

WT Box End Soon **-**

The waste toner sensor detected that the waste toner box is almost full.

Error code 4800

Replace WT Box **Replace the Waste Toner Box inside the machine.**

After the waste toner sensor detected that the waste toner box was almost full, pages more than the specified number have been printed.

< User Check >

- Replace the waste toner box.

Step	Cause	Remedy
1	High-voltage power supply PCB failure	Replace the high-voltage power supply PCB ASSY.
2	Main PCB failure	Replace the main PCB ASSY.

■ Error code 4B01

Toner Low:BK **-**

Dot counter of the toner cartridge (Black) or develop roller counter reaches the upper limit soon.

Error code 4B02

Toner Low:Y **-**

Dot counter of the toner cartridge (Yellow) or develop roller counter reaches the upper limit soon.

Error code 4B03

Toner Low:M **-**

Dot counter of the toner cartridge (Magenta) or develop roller counter reaches the upper limit soon.

Error code 4B04

Toner Low:C **-**

Dot counter of the toner cartridge (Cyan) or develop roller counter reaches the upper limit soon.

< User Check >

- Prepare a new toner cartridge.

Step	Cause	Remedy
1	The toner counter is not reset after the toner cartridge is replaced with a new one	Refer to "2.1 Toner Manual Reset Function" in Chapter 5, and reset the toner counter.
2	Main PCB failure	Replace the main PCB ASSY.

■ **Error code 4C01**

Replace Toner
Open the Top Cover, replace Toner Cartridge. Black (BK).

Dot counter of the toner cartridge (Black) or develop roller counter has reached the upper limit was detected.

Error code 4C02

Replace Toner
Open the Top Cover, replace Toner Cartridge. Yellow (Y).

Dot counter of the toner cartridge (Yellow) or develop roller counter has reached the upper limit was detected.

Error code 4C03

Replace Toner
Open the Top Cover, replace Toner Cartridge. Magenta (M).

Dot counter of the toner cartridge (Magenta) or develop roller counter has reached the upper limit was detected.

Error code 4C04

Replace Toner
Open the Top Cover, replace Toner Cartridge. Cyan (C).

Dot counter of the toner cartridge (Cyan) or develop roller counter has reached the upper limit was detected.

Error code 4C05

Replace Toner
Open the Top Cover, replace Toner Cartridge. Cyan (C)/ Magenta (M)/ Yellow (Y).

During printing, dot counter of color toner cartridge or develop roller counter has reached the upper limit was detected.

< User Check >

- Replace the toner cartridge whose counter reached the upper limit.

Step	Cause	Remedy
1	Main PCB failure if the error code remains after replacing with a new toner cartridge and resetting the toner counter	Replace the main PCB ASSY.

■ **Error code 4F01**

Cartridge Error **Put the Black (BK) Toner Cartridge back in.**

The new toner sensor of the toner cartridge (Black) could not detect a new cartridge properly.

Error code 4F02

Cartridge Error **Put the Yellow (Y) Toner Cartridge back in.**

The new toner sensor of the toner cartridge (Yellow) could not detect a new cartridge properly.

Error code 4F03

Cartridge Error **Put the Magenta (M) Toner Cartridge back in.**

The new toner sensor of the toner cartridge (Magenta) could not detect a new cartridge properly.

Error code 4F04

Cartridge Error **Put the Cyan (C) Toner Cartridge back in.**

The new toner sensor of the toner cartridge (Cyan) could not detect a new cartridge properly.

< User Check >

- Replace the toner cartridge with a new toner cartridge again.
- If the place where the machine is installed is not flat, relocate the machine to a flat place.

Step	Cause	Remedy
1	Connection failure of the new toner sensor PCB harness	Reconnect the toner/new sensor PCB harness.
2	New toner actuator that has come off or that has been caught	Re-assemble the new toner actuator.
3	New toner sensor failure	Replace the toner/new sensor PCB ASSY.
4	Main PCB failure if the error code remains after replacing with a new toner cartridge and performing the Toner manual reset	Replace the main PCB ASSY.

■ Error code 5001

Replace PF Kit MP
-

Number of used pages for the PF kit MP has reached the upper limit. (Printing is not stopped.)

Step	Cause	Remedy
1	The PF kit MP is at the end of life	Replace the PF kit MP. After replacing the PF kit MP, refer to "1.3.29 Reset counters for parts (Function code 88)" in Chapter 5, and reset the PF kit MP counter.
2	Main PCB failure if the error code remains after resetting the counter of the PF kit MP	Replace the main PCB ASSY.

■ Error code 5002

Replace PF Kit1
-

Number of used pages for the PF kit 1 has reached the upper limit.

Step	Cause	Remedy
1	The PF kit 1 is at the end of life	Replace the PF kit 1. After replacing the PF kit 1, refer to "1.3.29 Reset counters for parts (Function code 88)" in Chapter 5, and reset the PF kit 1 counter.
2	Main PCB failure if the error code remains after resetting the counter of the PF kit 1	Replace the main PCB ASSY.

■ Error code 5003

Replace PF Kit2
-

Number of used pages for the PF kit 2 has reached the upper limit.

Step	Cause	Remedy
1	The PF kit 2 is at the end of life	Replace the PF kit 2. After replacing the PF kit 2, refer to "1.3.29 Reset counters for parts (Function code 88)" in Chapter 5, and reset the PF kit 2 counter.
2	Main PCB failure if the error code remains after resetting the counter of the PF kit 2	Replace the main PCB ASSY.

■ Error code 6001

Cover is Open
Close the Front Cover.

The front cover sensor detected that the front cover was open.

< User Check >

- Close the front cover.

Step	Cause	Remedy
1	Connection failure of the front cover sensor harness	Reconnect the front cover sensor harness.
2	Front cover failure	Replace the front cover.
3	Front cover sensor failure	Replace the front cover sensor.
4	Main PCB failure	Replace the main PCB ASSY.

■ Error code 6004

Cover is Open
Close the Fuser Cover which can be found behind the Back Cover of the machine.

The eject sensor detected that the fuser cover was open.

< User Check >

- Close the fuser cover.

Step	Cause	Remedy
1	Eject actuator that has come off or that has been caught	Re-assemble the eject actuator.
2	Fuser cover installation failure	Re-assemble the fuser cover.
3	Connection failure of the eject sensor PCB harness	Reconnect the eject sensor PCB harness.
4	Eject sensor PCB failure	Replace the eject sensor PCB ASSY.
5	Main PCB failure	Replace the main PCB ASSY.

■ Error code 6101

No Toner
Open the Front Cover, then install Toner Cartridge. Black (BK).

The toner sensor detected that no toner cartridge (Black) was set.

Error code 6102

No Toner
Open the Front Cover, then install Toner Cartridge. Yellow (Y).

The toner sensor detected that no toner cartridge (Yellow) was set.

Error code 6103

No Toner
Open the Front Cover, then install Toner Cartridge. Magenta (M).

The toner sensor detected that no toner cartridge (Magenta) was set.

Error code 6104

No Toner
Open the Front Cover, then install Toner Cartridge. Cyan (C).

The toner sensor detected that no toner cartridge (Cyan) was set.

< User Check >

- Re-insert the toner cartridge.

Step	Cause	Remedy
1	Toner sensor failure	Replace the toner/new sensor PCB ASSY.
2	Main PCB failure	Replace the main PCB ASSY.

■ Error code 6200

No Drum Unit
Install the Drum Unit.

The current value between the CHG and GRID terminals and the toner sensor detected that there were no toner cartridges of any colors and detected that the drum unit was not set.

< User Check >

- Re-insert the drum unit.

Step	Cause	Remedy
1	Dirt on the GRID terminals of the main body and drum unit	Clean the GRID terminals of the main body and drum unit. (Refer to Fig. 2-5 (P2-55), Fig. 2-6 (P2-55).)
2	Dirt on the terminal of the high-voltage power supply PCB	Clean the terminal of the high-voltage power supply PCB.
3	High-voltage power supply PCB failure	Replace the high-voltage power supply PCB ASSY.
4	Toner sensor failure	Replace the toner/new sensor PCB ASSY.
5	Main PCB failure	Replace the main PCB ASSY.

■ Electrodes location of main body

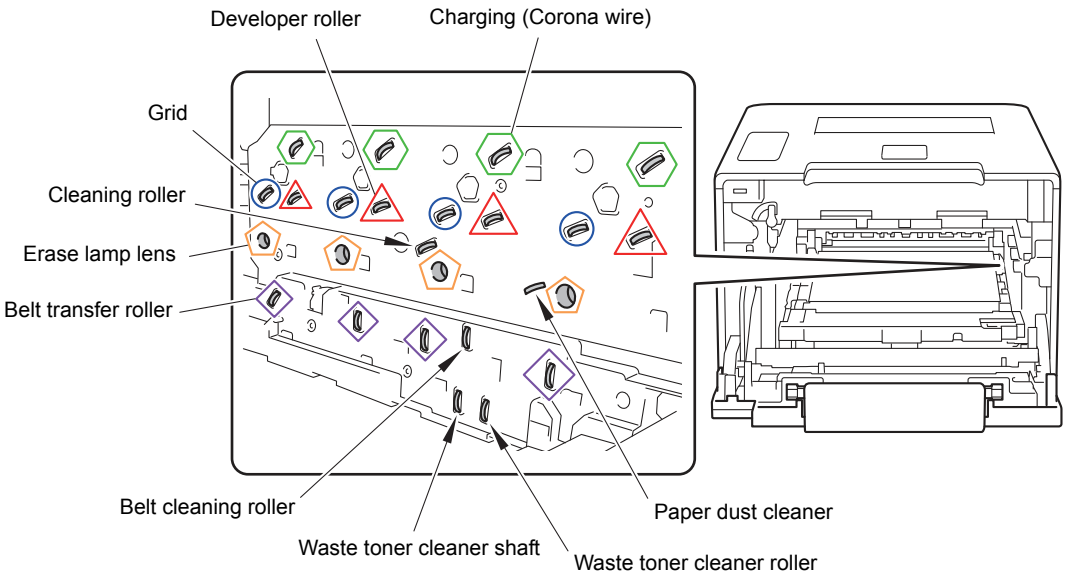

Fig. 2-5

■ Electrodes location of the drum unit

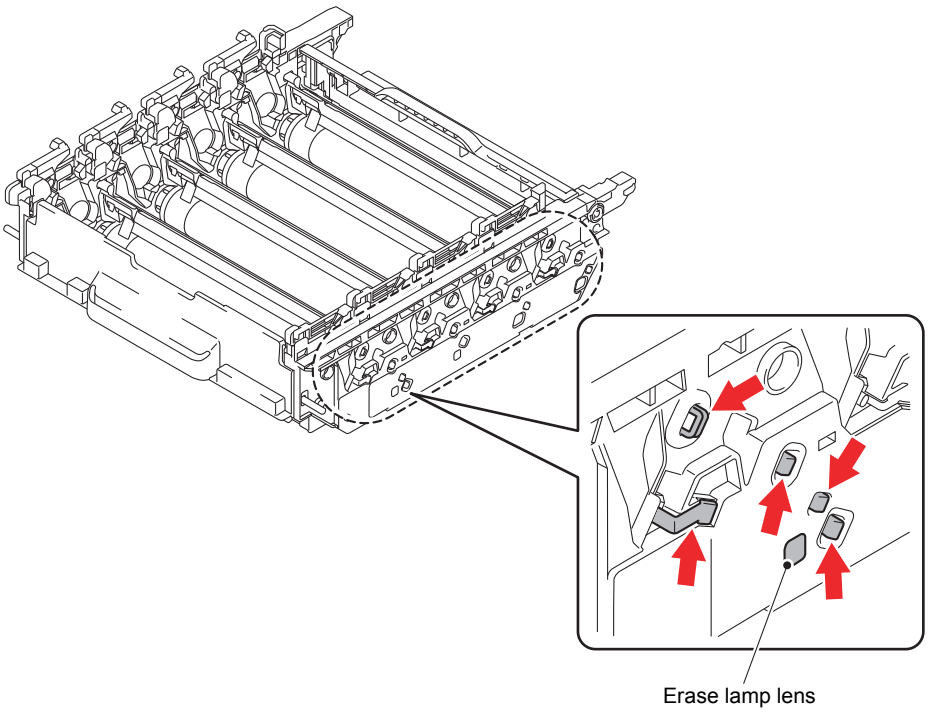

Fig. 2-6

Confidential

■ Error code 6300

No Waste Toner
Install the Waste Toner Box.

The waste toner sensor detected that no waste toner box was set.

< User Check >

- Re-insert the waste toner box in the correct position.

Step	Cause	Remedy
1	High-voltage power supply PCB failure	Replace the high-voltage power supply PCB ASSY.
2	Main PCB failure	Replace the main PCB ASSY.

■ Error code 6400

No Belt Unit
Open the Front Cover, pull out the Drum Unit completely and install the Belt Unit.

The registration mark sensor detected that no belt unit was set.

< User Check >

- Re-insert the belt unit.

Step	Cause	Remedy
1	Connection failure of the registration mark L PCB harness	Reconnect the registration mark sensor L PCB harness.
2	Registration mark L sensor failure	Replace the registration mark sensor unit.
3	Main PCB failure	Replace the main PCB ASSY.

■ Error code 6801

Cooling Down
Wait for a while

The internal temperature sensor or side thermistor of the fuser unit detected a temperature higher than the specified value.

< User Check >

- Decrease the room temperature.
- Place the machine away from a heater.

Step	Cause	Remedy
1	Connection failure of the internal temperature sensor harness	Reconnect the internal temperature sensor harness.
2	Side thermistor of the fuser unit failure	Replace the fuser unit.
3	Main PCB failure	Replace the main PCB ASSY.

■ Error code 6901

Self-Diagnostic
Turn the power off, then on again. Leave the machine for 15 min.

Some fuser unit errors occurred at power-ON or upon recovery from sleep mode.

Error code 6902

Self-Diagnostic
Will Automatically Restart within 15 minutes.

After the error was detected at the fuser unit, power was turned ON again and the error is being checked. (If power is turned OFF and ON after error code 6901 occurred, this code is displayed for about 15 minutes.)

Step	Cause	Remedy
1	Connection failure of each harness of the fuser unit	Reconnect each harness of the fuser unit.
2	Connection failure of the eject sensor PCB harness	Reconnect the eject sensor PCB harness.
3	Fuser unit failure	Replace the fuser unit.
4	Eject sensor PCB failure	Replace the eject sensor PCB ASSY.
5	Low-voltage power supply PCB failure	Replace the low-voltage power supply PCB unit.
6	Main PCB failure	Replace the main PCB ASSY.

Note:

- Turn OFF the power switch. After checking that the fuser unit has cooled sufficiently, turn ON the power switch again and leave the machine for ten minutes. This problem may then be cleared.
- To clear the fuser unit error after the remedy of the error is taken, enter the maintenance mode and then exit from the maintenance mode using Function code 99.

■ Error code 6A00

Drum ! **Slide the Blue tab on Drum Unit.**

Electric discharge that may be caused by dirt on the corona wire of the drum unit was detected.

Error code 6B01

Drum Stop **Replace the Drum Unit.**

Electric discharge was detected when the number of the drum unit rotations had become more than twice of the upper limit.

< User Check >

- Clean the corona wire by sliding the blue tab of the drum unit for all four colors several times.
- Clean the terminal of the drum unit. (Refer to Fig. 2-6 (P2-55).)
- Replace the drum unit.

Step	Cause	Remedy
1	Dirt on the GRID terminals of the main body	Clean the GRID terminals of the main body. (Refer to Fig. 2-5 (P2-55).)
2	Dirt on the terminal of the high-voltage power supply PCB	Clean the terminal of the high-voltage power supply PCB.
3	High-voltage power supply PCB failure	Replace the high-voltage power supply PCB ASSY.
4	Main PCB failure	Replace the main PCB ASSY.

■ Error code 6C02

Tray 2 Error **Take out Tray 2 and push it back in firmly.**

After the T2 paper tray unit is opened and closed or the power is turned ON, the T2 plate origin sensor detects that lift-up of the plate of the T2 paper tray unit is not completed within the specified period of time.

< User Check >

- Open the T2 paper tray unit and close the T2 paper tray unit correctly.

Step	Cause	Remedy
1	Connection failure of the T2 plate origin sensor harness	Reconnect the T2 plate origin sensor harness.
2	T2 relay PCB failure	Replace the T2 relay PCB ASSY.
3	T2 plate origin sensor failure	Replace the T2 paper tray unit.
4	Main PCB failure	Replace the main PCB ASSY.

■ Error code 6E00

Toner Error
One or more Toner Cartridges are not detected. Pull out and reinsert all 4 Toner Cartridges.

The develop release sensor detected the developer roller disengagement or engagement failure.

Step	Cause	Remedy
1	Connection failure of the develop release sensor harness	Reconnect the develop release sensor harness.
2	Develop release sensor failure	Replace the develop release sensor PCB ASSY.
3	Develop release clutch failure	Replace the develop release drive unit.
4	Main PCB failure	Replace the main PCB ASSY.

■ Error code 6F00

Print Unable ZC
Turn the power off and then back on again.

Machine detected that supplied power was unstable. (Less than 100 times)

< User Check >

- Turn the power switch OFF/ON.
- Insert the filter into the power supply.

Step	Cause	Remedy
1	The power supply waveform is incorrect	Install a voltage stabilizer in the power supply part.

■ Error code 7000

Jam Inside
Open the Front Cover, pull out the Drum Unit completely and remove the jammed paper.

After the registration rear sensor detects paper pass, the eject sensor does not detect paper pass.

< User Check >

- Remove the jammed paper.

Step	Cause	Remedy
1	Foreign object inside machine	Remove the foreign object.
2	Eject actuator that has come off or that has been caught	Re-assemble the eject actuator.
3	Fuser cover installation failure	Re-assemble the fuser cover.
4	Connection failure of the eject sensor PCB harness	Reconnect the eject sensor PCB harness.
5	Fuser drive gear Z25 damaged	Replace the fuser drive gear Z25.
6	Process related feed gear damaged	Replace the process drive unit.
7	Paper feed related gear damaged	Replace the main drive unit.
8	Eject sensor failure	Replace the eject sensor PCB ASSY.
9	Fuser unit failure	Replace the fuser unit.
10	Main PCB failure	Replace the main PCB ASSY.

■ Error code 7100

Jam Rear
Open the Back Cover and remove the jammed paper, then press Go.

After the registration rear sensor detects the end of paper pass and the specified period of time has passed, the eject sensor continues to detect paper pass.

< User Check >

- Remove the jammed paper.
- Check if the back cover is not open during 2-sided printing.

Step	Cause	Remedy
1	Foreign object at the back of the machine	Remove the foreign object.
2	Eject actuator caught on some position	Re-assemble the eject actuator.
3	Fuser cover installation failure	Re-assemble the fuser cover.
4	Back cover installation failure	Re-assemble the back cover.
5	Eject sensor failure	Replace the eject sensor PCB ASSY.
6	Back cover failure	Replace the back cover.
7	Fuser drive gear Z25 damaged	Replace the fuser drive gear Z25.
8	Paper eject ASSY failure	Replace the paper eject ASSY.
9	Paper feed related gear damaged	Replace the main drive unit.
10	Fuser unit failure	Replace the fuser unit.
11	Main PCB failure	Replace the main PCB ASSY.

■ Error code 7200

Jam MP Tray
Remove the jammed paper from Multi Purpose Tray and press Go.

When the paper is fed from the MP tray, after the MP registration front sensor detects paper pass, the registration rear sensor does not detect paper pass after a set period of time.

< User Check >

- Remove the jammed paper.
- Insert the papers straight using the paper guide of the MP tray.
- Check if the papers loaded in the MP tray is not held down with your hand.
- Check if the double feed occurs in the MP tray.
- Check if the front cover is closed correctly.
- Check if the machine is used with the MP tray support and MP flap are in closed state.

Step	Cause	Remedy
1	Foreign object at the back of the machine	Remove the foreign object.
2	Registration rear actuator that has come off or that has been caught	Re-assemble the registration rear actuator.
3	Connection failure of the registration front/rear sensor PCB harness	Reconnect the registration front/rear sensor PCB harness.
4	MP unit installation failure	Re-assemble the MP unit.
5	MP separation pad worn out	Replace the PF kit MP.
6	Registration rear sensor failure	Replace the registration front/rear sensor PCB.
7	Paper feed related gear damaged	Replace the main drive unit.
8	Main PCB failure	Replace the main PCB ASSY.

■ Error code 7300

Jam Tray 1
Remove the jammed paper from Tray 1.

In the case of printing by feeding paper from the paper tray 1, after the T1 paper feed sensor detects paper pass, the registration front sensor does not detect paper pass after a set period of time.

< User Check >

- Remove the jammed paper.
- Check if the paper tray 1 is closed correctly.

Step	Cause	Remedy
1	Foreign object at the front of the paper tray 1	Remove the foreign object.
2	T1 paper dust cleaning roller installation failure	Re-assemble the T1 paper dust cleaning roller.
3	Registration front actuator that has come off or that has been caught	Re-assemble the registration front actuator.
4	Connection failure of the registration front/rear sensor PCB harness	Reconnect the registration front/rear sensor PCB harness.
5	Registration front sensor failure	Replace the registration front/rear sensor PCB ASSY.
6	Paper feed related gear damaged	Replace the main drive unit.
7	Main PCB failure	Replace the main PCB ASSY.

■ Error code 7400

Jam Tray 2
Remove the jammed paper from Tray 2.

In the case of printing by feeding paper from the T2 paper tray unit, after the T2 paper feed sensor detects paper pass, the registration front sensor does not detect paper pass after a set period of time.

< User Check >

- Remove the jammed paper.
- Close the paper tray 1 and T2 paper tray unit correctly.

Step	Cause	Remedy
1	Foreign object at the front of the paper tray 1	Remove the foreign object.
2	Foreign object at the front of the T2 paper tray unit	Remove the foreign object.
3	T1/T2 paper dust cleaning roller installation failure	Re-assemble the T1/T2 paper dust cleaning roller.
4	Registration front actuator that has come off or that has been caught	Re-assemble the registration front actuator.
5	Connection failure of the registration front/rear sensor PCB harness	Reconnect the registration front/rear sensor PCB harness.
6	Registration front sensor failure	Replace the registration front/rear sensor PCB ASSY.
7	Paper feed related gear damaged	Replace the main drive unit.
8	Main PCB failure	Replace the main PCB ASSY.

■ Error code 7700

Jam 2-sided
Pull out Tray 1 completely. Check inside the machine or open the Back Cover to remove the jammed paper.

After the first side is printed in 2-sided printing mode, the registration front sensor does not detect paper pass after a set period of time.

< User Check >

- Remove the jammed paper.
- Check if the back cover is closed correctly.
- Check if the paper tray 1 is closed correctly.

Step	Cause	Remedy
1	Foreign object inside the duplex path	Remove the foreign object.
2	Foreign object inside the duplex path of the paper tray 1	Remove the foreign object.
3	Fuser cover installation failure	Re-assemble the fuser cover.
4	Back cover installation failure	Re-assemble the back cover.
5	Main PCB failure	Replace the main PCB ASSY.

■ Error code 8402

No Tray
The paper tray cannot be detected, re-install #T.

While the T2 paper tray unit is open state, print or adjustment operation was attempted.

< User Check >

- Check if the T2 paper tray unit is closed correctly.

Step	Cause	Remedy
1	T2 paper feed actuator that has come off or that has been caught	Re-assemble the T2 paper feed actuator.
2	Main PCB failure	Replace the main PCB ASSY.

■ Error code 8501

No Tray **Reinstall tray 1**

The T1 paper feed sensor detected that the paper tray 1 is open in 2-sided printing or printing by feeding paper from the T2 paper tray unit. (before the registration of printing in the engine)

Error code 8505

No Tray **Reinstall tray 1**

The T1 paper feed sensor detected that the paper tray 1 is open in 2-sided printing or printing by feeding paper from the T2 paper tray unit. (after the registration of printing in the engine)

< User Check >

- Check if the paper tray 1 is closed correctly.

Step	Cause	Remedy
1	T1 paper feed actuator that has come off or that has been caught	Re-assemble the T1 paper feed actuator.
2	Connection failure of the T1 paper feed sensor PCB harness	Reconnect the T1 paper feed sensor PCB harness.
3	T1 paper feed sensor failure	Replace the T1 paper feed sensor PCB ASSY.
4	Main PCB failure	Replace the main PCB ASSY.

■ Error code 8903

2-sided Disabled **Close the Back Cover of the machine.**

The back cover sensor detected the open state when 2-sided printing is started.
(before the registration of printing in the engine)

Error code 8904

2-sided Disabled **Close the Back Cover of the machine.**

The back cover sensor detected the open state during 2-sided printing.
(after the registration of printing in the engine)

< User Check >

- Close the back cover.

Step	Cause	Remedy
1	Connection failure of the back cover sensor harness	Reconnect the back cover sensor harness.
2	Back cover sensor installation failure	Re-assemble the back cover sensor.
3	Breakage of boss that presses the back cover sensor	Replace the back cover.
4	Back cover sensor failure	Replace the back cover sensor.
5	Main PCB failure	Replace the main PCB ASSY.

■ Error code 8A01

Size Error DX
Specify the correct paper and press Go.

The registration rear sensor detected that the fed paper was larger or smaller than the specified size in 2-sided printing.

Error code 8A02

2-sided Disabled
Load #S paper and press Go.

The registration rear sensor detected that the length of the paper is too long and it may hit within the machine in 2-sided printing.

< User Check >

- Use the Letter to Legal size paper.

Step	Cause	Remedy
1	Registration rear actuator caught on some position	Re-assemble the registration rear actuator.
2	Registration rear sensor failure	Replace the registration front/rear sensor PCB ASSY.
3	Main PCB failure	Replace the main PCB ASSY.

■ Error code 8D01

Short paper
Open the Back Cover and then press Go.

The registration rear sensor detected that the paper loaded in the paper tray was smaller than the specified size.

< User Check >

- Open the back cover and print using the straight paper path.
- Length of the paper is 114 mm or more.

Step	Cause	Remedy
1	Registration rear actuator caught on some position	Re-assemble the registration rear actuator.
2	Registration rear sensor failure	Replace the registration front/rear sensor PCB ASSY.
3	Main PCB failure	Replace the main PCB ASSY.

■ Error code 8D02

Small paper
Open the Back Cover and then press Go.

The paper size which is not supported by the output tray is set for printing from the printer driver.

< User Check >

- The size of paper actually loaded and the one specified from the driver shall be the one within the specified range.
- Open the back cover and print using the straight paper path.

Step	Cause	Remedy
1	Main PCB failure	Replace the main PCB ASSY.

■ Error code 9001

Size Mismatch
Load #S paper in #T and press Go.

The size of paper loaded in the MP tray and the one specified from the driver are not same when paper is fed from the MP tray.

Error code 9002

Size Mismatch
Load #S paper and press Go.

The size of paper loaded in the paper tray 1 and the one specified from the driver are not same when paper is fed from the paper tray 1.

Error code 9003

Size Mismatch
Load #S paper in #T and press Go.

The size of paper loaded in the T2 paper tray unit and the one specified from the driver are not same when paper is fed from the T2 paper tray unit.

< User Check >

- When specifying the paper in the driver, set the paper size of the paper that is actually set.

Step	Cause	Remedy
1	Registration rear actuator caught on some position	Re-assemble the registration rear actuator.
2	Registration rear sensor failure	Replace the registration front/rear sensor PCB ASSY.
3	Main PCB failure	Replace the main PCB ASSY.

■ Error code 9301

No Paper
Load #S paper in #T.

When paper was fed from the MP tray, the MP paper empty sensor detected that no paper was in the MP tray.

< User Check >

- Load paper to the MP tray.

Step	Cause	Remedy
1	MP paper empty actuator caught on some position	Re-assemble the MP paper empty actuator.
2	Connection failure of the MP paper empty/registration front sensor PCB harness	Reconnect the MP paper empty/ registration front sensor PCB harness.
3	MP paper empty sensor failure	Replace the MP paper empty/registration front sensor PCB ASSY.
4	Main PCB failure	Replace the main PCB ASSY.

■ Error code 9302

No Paper
Load #S paper in #T.

When paper was fed from the paper tray 1, the T1 paper feed sensor detected that no paper was in the paper tray 1.

< User Check >

- Load paper to the paper tray.

Step	Cause	Remedy
1	T1 paper feed actuator caught on some position	Re-assemble the T1 paper feed actuator.
2	Connection failure of the T1 paper feed sensor PCB harness	Reconnect the T1 paper feed sensor PCB harness.
3	T1 paper feed sensor failure	Replace the T1 paper feed sensor PCB ASSY.
4	Main PCB failure	Replace the main PCB ASSY.

■ Error code 9303

No Paper
Load #S paper in #T.

When paper was fed from the T2 paper tray unit, the T2 paper feed sensor detected that no paper was in the T2 paper tray unit.

< User Check >

- Load paper to the paper tray.

Step	Cause	Remedy
1	T2 paper feed actuator caught on some position	Re-assemble the T2 paper feed actuator.
2	Connection failure of the T2 paper feed sensor PCB harness	Reconnect the T2 paper feed sensor PCB harness.
3	Connection failure of the T2 relay PCB harness	Reconnect the T2 relay PCB harness.
4	T2 relay PCB failure	Replace the T2 relay PCB ASSY.
5	T2 connector failure	Replace the T2 paper tray unit.
6	Main PCB failure	Replace the main PCB ASSY.

■ Error code 9306

No Paper
Load #S paper in #T.

For printing specifying Auto, it was detected that no paper was loaded in any of the paper trays.

< User Check >

- Load paper to any tray.

Step	Cause	Remedy
1	MP paper empty actuator caught on some position	Re-assemble the MP paper empty actuator.
2	T1 paper feed actuator caught on some position	Re-assemble the T1 paper feed actuator.
3	T2 paper feed actuator caught on some position	Re-assemble the T2 paper feed actuator.
4	Connection failure of the MP paper empty/registration front sensor PCB harness	Reconnect the MP paper empty/ registration front sensor PCB harness.
5	Connection failure of the T1 paper feed sensor PCB harness	Reconnect the T1 paper feed sensor PCB harness.
6	Connection failure of the T2 paper feed sensor PCB harness	Reconnect the T2 paper feed sensor PCB harness.
7	MP paper empty sensor failure	Replace the MP paper empty/registration front sensor PCB ASSY.
8	T1 paper feed sensor failure	Replace the T1 paper feed sensor PCB ASSY.
9	T2 connector failure	Replace the T2 paper tray unit.
10	Main PCB failure	Replace the main PCB ASSY.

■ **Error code 9701**

Size Error DX **Press Cancel. Specify the correct paper and load the same size paper as the Printer driver setting.**

For 2-sided printing, the tray whose paper size was not supported by 2-sided printing was selected.

Error code 9702

Size Error **Specify the correct paper size for Tray 1.**

For printing by feeding paper from the paper tray 1, the size of paper specified from the driver set the size which was not supported by the paper tray 1.

Error code 9703

Size Error **Specify the correct paper size for Tray 2.**

For printing by feeding paper from the T2 paper tray unit, the size of paper specified from the driver set the size which was not supported by the T2 paper tray unit.

< User Check >

- The size of the paper specified from the driver shall be A4 or Letter size and load the same size of paper to the specified paper tray.

Step	Cause	Remedy
1	Main PCB failure	Replace the main PCB ASSY.

■ Error code 9801

Calibrate
Calibration failed. Turn the power off and then back on again.

Error occurred with the value measured during color density adjustment performed from the control panel.

< User Check >

- Check if the toner cartridges are set in the correct order of colors.
- Replace the toner cartridge.
- Replace the drum unit.
- If the belt unit has a scratch, replace it.
- If “WT Box End Soon” is displayed on the LCD and the belt unit has dirt, replace the waste toner box.

Step	Cause	Remedy
1	Dirt on the registration mark sensor L	Clean the registration mark sensor L.
2	Failure in printed measurement pattern image	If failure occurs when printing “2D3S YMCBWKW_A” in “Function code 71”, refer to “4.3 Troubleshooting for Image Defects” in this chapter and take a measure.
3	Connection failure of the registration mark sensor L PCB harness	Reconnect the registration mark sensor L PCB harness.
4	Density sensor failure	Replace the registration mark sensor unit.
5	Main PCB failure	Replace the main PCB ASSY.

■ Error code 9802

Calibrate
Calibration failed. Insufficient Toner for Calibration.

Dot counter or develop roller counter of color toner has reached the upper limit during color density adjustment performed from the control panel.

< User Check >

- Replace the corresponding toner cartridge.

Step	Cause	Remedy
1	Main PCB failure	Replace the main PCB ASSY.

■ Error code 9803

Calibrate **Calibration failed. Press Go, and try again.**

Density patch measurement ended unsuccessfully during color density adjustment performed from the control panel.

Error code 9804

Calibrate **Calibration failed. Press Go, and try again.**

Error occurred with the value measured during density sensor sensitivity calibration.

< User Check >

- Check if the toner cartridges are set in the correct order of colors.
- Replace the toner cartridge.
- Replace the drum unit.
- If the belt unit has a scratch, replace it.
- If “WT Box End Soon” is displayed on the LCD and the belt unit has dirt, replace the waste toner box.

Step	Cause	Remedy
1	Dirt on the registration mark sensor L	Clean the registration mark sensor L.
2	Failure in printed measurement pattern image	If failure occurs when printing “2D3S YMCBWKW_A” in “Function code 71”, refer to “4.3 Troubleshooting for Image Defects” in this chapter and take a measure.
3	Connection failure of the registration mark sensor L PCB harness	Reconnect the registration mark sensor L PCB harness.
4	Density sensor failure	Replace the registration mark sensor unit.
5	Main PCB failure	Replace the main PCB ASSY.

Confidential

■ Error code 9A01

Registration
Registration failed. Turn the power off and then back on again.

Error occurred with the value measured during auto color registration performed from the control panel.

< User Check >

- Check if the toner cartridges are set in the correct order of colors.
- Replace the toner cartridge.
- Replace the drum unit.
- If the belt unit has a scratch, replace it.
- If “WT Box End Soon” is displayed on the LCD and the belt unit has dirt, replace the waste toner box.

Step	Cause	Remedy
1	Dirt on the registration mark sensor L/registration mark sensor R	Clean the registration mark sensor L/ registration mark sensor R.
2	Connection failure of the registration mark sensor L PCB/ registration mark sensor R PCB harness	Reconnect the registration mark sensor L PCB/registration mark sensor R PCB harness.
3	Failure in printed measurement pattern image	If failure occurs when printing “2D3S YMCBWKW_A” in “Function code 71”, refer to “4.3 Troubleshooting for Image Defects” in this chapter and take a measure.
4	Registration mark sensor L or registration mark sensor R failure	Replace the registration mark sensor unit.
5	Main PCB failure	Replace the main PCB ASSY.

■ Error code 9A02

Registration
Registration failed. Insufficient Toner for Registration.

Dot counter or develop roller counter of color toner has reached the upper limit during auto color registration performed from the control panel.

< User Check >

- Replace the corresponding toner cartridge.

Step	Cause	Remedy
1	Main PCB failure	Replace the main PCB ASSY.

■ Error code 9A03

Registration
Registration failed. Press Go, and try again.

Error occurred during patch data printing in auto color registration performed from the control panel.

< User Check >

- Check if the toner cartridges are set in the correct order of colors.
- Replace the toner cartridge.
- Replace the drum unit.
- If the belt unit has a scratch, replace it.
- If “WT Box End Soon” is displayed on the LCD and the belt unit has dirt, replace the waste toner box.

Step	Cause	Remedy
1	Dirt on the registration mark sensor L/registration mark sensor R	Clean the registration mark sensor L/ registration mark sensor R.
2	Connection failure of the registration mark sensor L PCB/ registration mark sensor R PCB harness	Reconnect the registration mark sensor L PCB/registration mark sensor R PCB harness.
3	Failure in printed measurement pattern image	If failure occurs when printing “2D3S YMCBWKW_A” in “Function code 71”, refer to “4.3 Troubleshooting for Image Defects” in this chapter and take a measure.
4	Registration mark sensor L or registration mark sensor R failure	Replace the registration mark sensor unit.
5	Main PCB failure	Replace the main PCB ASSY.

■ **Error code C001**

Log Access Error. **Server Timeout, contact your administrator.**

Timeout occurred with access request sent to server due to incorrect server address, network disconnection, or inactive server.

Error code C002

Log Access Error. **Authentication Error, contact your administrator.**

User authentication is unavailable due to incorrect user name, incorrect password, or asynchronous date and time between the machine and server.

Error code C003

Log Access Error. **File Access Error, contact your administrator.**

Access to a file is unavailable due to incorrect directory name, no write permission on directory, file write lock, or no write permission on file.

Error code C004

Log Access Error. **Wrong Date&Time, contact your administrator.**

The current time necessary for user authentication is unavailable due to time not being obtained.

< User Check >

- Refer to User's guide and reconfigure network settings.
- Check the wiring of the LAN cables.
- Check the wireless LAN settings.

Step	Cause	Remedy
1	Connection failure of the wireless LAN PCB connector	Reconnect the Wireless LAN PCB connector.
2	Wireless LAN PCB failure	Replace the wireless LAN PCB ASSY.
3	Main PCB failure	Replace the main PCB ASSY.

■ Error code C700

Out of Memory **Press Cancel**

The memory is insufficient to expand the data of PC-Print.

Error code C800

Print Data Full **Print Data is full. Press Cancel and delete the previously stored data.**

The memory used to store secure print data exceeded the memory size for secure print data.

< User Check >

- Print the print data stored in the memory.
- Divide the print data and print it.

Step	Cause	Remedy
1	Main PCB failure	Replace the main PCB ASSY.

■ Error code D800

Touchscreen initialization failed **Remove any material which is on the touchscreen.**

Error occurred during touch panel initialization.

Error code D900

- -

Communication between the panel PCB and main PCB is unavailable during touch panel initialization.

Error code DA00

- -

After the initialization of the panel PCB, no response was sent from the panel PCB for a period of time.

Error code DB00

- -

USB communication between the main PCB and panel PCB is unavailable.

Step	Cause	Remedy
1	The version of the panel firmware and the main firmware do not match	Install the latest panel firmware and main firmware.
2	Connection failure of the key PCB flat cable	Reconnect the key PCB flat cable.
3	Key PCB flat cable failure	Replace the key PCB flat cable.
4	Panel control PCB failure	Replace the panel control PCB ASSY.
5	LCD unit failure	Replace the LCD panel ASSY.
6	Key PCB failure	Replace the panel case ASSY.
7	Main PCB failure	Replace the main PCB ASSY.

■ Error code E000

Print Unable E0 **Turn off and on.**

Some ROM checksum error occurred.

Error code E100

Print Unable E1 **Turn off and on.**

Program error.

< User Check >

- Install the latest firmware.

Step	Cause	Remedy
1	Main PCB failure	Replace the main PCB ASSY.

■ Error code E500

Print Unable E5 **Turn the power off and then back on again.**

Error occurred when DRAM on the main PCB ASSY was accessed.

Error code E600

Print Unable E6 **Turn the power off and then back on again.**

Error occurred during writing to EEPROM on the main PCB ASSY.

Error code E702

Machine Error E7 **Turn off and on.**

Error occurred during reading from the flash ROM on the main PCB.

Step	Cause	Remedy
1	Main PCB failure	Replace the main PCB ASSY.

■ Error code EC00

Unusable Device **Remove the Device. Turn the power off and back on again.**

Overcurrent was caused because a USB device that did not meet the specifications was inserted into the USB port.

< User Check >

- Remove the USB device from the USB port and turn the power OFF. Turn it ON again after a while.
- Replace the USB device with another one.

Step	Cause	Remedy
1	USB host relay PCB failure	Replace the USB host relay PCB ASSY.
2	Main PCB failure	Replace the main PCB ASSY.

Confidential

■ Error code F900

Machine Error F9
-

Setting by spec code is not entered.

Step	Cause	Remedy
1	During function code 74, power is turned OFF.	Enter the Setting by spec code again. (Refer to "1.3.23 Setting by country (Function code 74)" in Chapter 5.)
2	Main PCB failure	Replace the main PCB ASSY.

Confidential

4.2 Troubleshooting for Paper Feeding Problems

Problems related to paper feeding are end user recoverable if following the User Check items. If the same problem occurs again, follow each procedure in the order of the number described in the Step column in the tables below.

4.2.1 No paper feeding from paper tray 1

< User Check >

- Check if the paper is loaded into the paper tray correctly.
- Check that too much paper is not loaded in the paper tray.
- Turn back the paper loaded in the paper tray or change the orientation of the paper by 180°.
- Check if the thickness of the paper is 60 to 105 g/m^2.
- Check whether the MP tray or T2 paper tray unit is specified for the paper feeding tray.
- Fan the stack of paper well and reinsert the papers into the paper tray.
- When the T2 paper tray unit is available, check if the T2 paper tray unit is closed correctly.
- Clean the T1 paper pick-up roller.

Step	Cause	Remedy
1	T1 paper feed actuator coming off	Re-assemble the T1 paper feed actuator.
2	Connection failure of the main motor harness	Reconnect the main motor harness.
3	T1 roller holder ASSY installation failure	Install the T1 roller holder ASSY correctly.
4	Connection failure of the T1 paper feed sensor PCB harness	Reconnect the T1 paper feed sensor PCB harness.
5	T1 paper pick-up roller worn out	Replace the PF kit 1.
6	T1 paper feed sensor failure	Replace the T1 paper feed sensor PCB ASSY.
7	T1 plate gear damaged	Replace the T1 plate gear.
8	Paper feed related gear damaged	Replace the main drive unit.
9	Main motor failure	Replace the process drive unit.
10	Paper feed unit failure	Replace the paper feed unit.
11	Fuser unit damaged	Replace the fuser unit.
12	Main PCB failure	Replace the main PCB ASSY.

4.2.2 No paper feeding from T2 paper tray unit

< User Check >

- Check if the paper is loaded into the paper tray correctly.
- Check that too much paper is not loaded in the paper tray.
- Turn back the paper loaded in the paper tray or change the orientation of the paper by 180°.
- Check if the thickness of the paper is 60 to 105 g/m^2.
- Check whether the MP tray or paper tray 1 is specified for the paper feeding tray.
- Fan the stack of paper well and reinsert the papers into the paper tray.
- Clean the T2 paper pick-up roller.
- Check whether the paper tray 1 is closed correctly.

Step	Cause	Remedy
1	T2 paper feed actuator coming off	Re-assemble the T2 paper feed actuator.
2	Connection failure of the main motor harness	Reconnect the main motor harness.
3	T2 roller holder ASSY installation failure	Install the T2 roller holder ASSY correctly.
4	Connection failure of the T2 paper feed/plate origin sensor PCB harness	Reconnect the T2 paper feed/plate origin sensor PCB harness.
5	Connection failure of the T2 registration sensor PCB harness	Reconnect the T2 registration sensor PCB harness.
6	Connection failure of the T2 relay PCB harness	Reconnect the T2 relay PCB harness.
7	T2 paper pick-up roller worn out	Replace the PF kit 2.
8	T2 relay PCB failure	Replace the T2 relay PCB ASSY.
9	Main motor failure	Replace the process drive unit.
10	Paper feed related gear damaged	Replace the main drive unit.
11	Fuser unit damaged	Replace the fuser unit.
12	Main PCB failure	Replace the main PCB ASSY.
13	T2 connector or T2 plate motor failure	Replace the T2 paper tray unit.

4.2.3 No paper feeding from MP tray

< User Check >

- Check if the paper is loaded all the way into the MP tray.
- Check that too much paper is not loaded in the MP tray.
- Check if the machine is used with the MP tray support and MP flap are in closed state.
- Check if the thickness of the paper is 60 to 163 g/m^2.
- Check whether the paper tray 1 or T2 paper tray unit is specified for the paper feeding tray.
- Fan the stack of paper well and reinsert the papers into the MP tray.
- Clean the MP paper pick-up roller.
- Check whether the paper tray 1 is closed correctly.

Step	Cause	Remedy
1	MP paper empty acutuator A ASSY/B coming off	Re-assemble the MP paper empty acutuator A ASSY/B.
2	Connection failure of the main motor harness	Reconnect the main motor harness.
3	MP roller holder ASSY installation failure	Check the installation of the MP roller holder ASSY and install it correctly.
4	Connection failure of the MP paper empty/registration front sensor PCB harness	Reconnect the MP paper empty/ registration front sensor PCB harness.
5	MP paper pick-up roller worn out	Replace the PF kit MP.
6	MP paper empty acutuator A ASSY/B failure	Replace the MP paper empty acutuator A ASSY/B.
7	MP paper empty/registration front sensor failure	Replace the MP paper empty/registration front sensor PCB ASSY.
8	Main motor failure	Replace the process drive unit.
9	Paper feed related gear damaged	Replace the main drive unit.
10	Fuser unit damaged	Replace the fuser unit.
11	Main PCB failure	Replace the main PCB ASSY.

4.2.4 Multiple sheets of paper are fed

< User Check >

- Check that too much paper is not loaded in any paper tray.
- Check if the paper is loaded into each paper tray correctly.
- Turn back the paper loaded in each paper tray or change the orientation of the paper by 180°.
- Check if the thickness of each paper is 60 to 105 g/m^2. (60 to 163 g/m^2 for MP tray.)
- Fan the stack of paper well and reinsert the papers into each paper tray.

Step	Cause	Remedy
1	Separation pad worn out	Replace the appropriate PF kit.

4.2.5 Paper becomes wrinkled

< User Check >

- Check if the paper is loaded into each paper tray correctly.
- Turn back the paper loaded in each paper tray or change the orientation of the paper by 180°.
- Adjust the paper guide corresponding to the paper size.
- Check if the thickness of the paper is 60 to 105 g/m^2. (60 to 163 g/m^2 for MP tray.)
- Check if paper is not damp.
- Check that no dust adheres to the fuser unit.
- Check whether the paper type is appropriate.

Step	Cause	Remedy
1	Paper eject ASSY failure	Replace the paper eject ASSY.
2	Fuser unit failure	Replace the fuser unit.

4.2.6 Paper is fed at an angle

< User Check >

- Check if the paper is loaded into each paper tray correctly.
- Turn back the paper loaded in each paper tray or change the orientation of the paper by 180°.
- Adjust the paper guide corresponding to the paper size.
- Check if the thickness of the paper is 60 to 105 g/m^2. (60 to 163 g/m^2 for MP tray.)
- Check that too much paper is not loaded in the paper tray.
- Check whether the paper type is appropriate.
- Clean each paper pick-up roller.
- Check if only the one side of the envelope lever is lowered.

Step	Cause	Remedy
1	Uneven worn-out of each paper pick-up roller	Replace the appropriate PF kit.
2	Paper feed unit failure	Replace the paper feed unit.
3	Main PCB failure	Replace the main PCB ASSY.

4.2.7 Paper curls

< User Check >

- Check if the size of paper specified from the driver is matched with the one actually loaded.
- Select "Reduce Paper Curl" in the driver.
- Check if the paper is loaded into each paper tray correctly.
- Print with the envelope lever is lowered.

Step	Cause	Remedy
1	Fuser unit failure	Replace the fuser unit.
2	Main PCB failure	Replace the main PCB ASSY.

4.2.8 Unable to perform 2-sided printing

< User Check >

- Firmly close the back cover.
- Firmly set the paper tray.
- Set the driver setting to 2-sided printing.
- Use the paper equal to or larger than Letter size or A4 size.
  (Use paper specified in each country setting.)

Step	Cause	Remedy
1	Eject actuator coming off	Re-assemble the eject actuator.
2	Back cover failure	Replace the back cover.
3	Eject sensor failure	Replace the eject sensor PCB ASSY.
4	Paper eject origin sensor failure	Replace the paper eject origin sensor.
5	Paper eject ASSY failure	Replace the paper eject ASSY.
6	Main PCB failure	Replace the main PCB ASSY.

4.2.9 Paper jam

■ Paper jam at the paper tray 1

< User Check >

- Check if the paper is loaded into the paper tray 1 correctly.
- Turn back the paper loaded in the paper tray 1 or change the orientation of the paper by 180°.
- Adjust the paper guide corresponding to the paper size.
- Check if too much paper is loaded in the tray.
- Check if the thickness of the paper is 60 to 105 g/m^2.
- Fan the stack of paper well and reinsert the papers into the paper tray.
- Replace the toner cartridge with a new one.
- Replace the drum unit with a new one.

Step	Cause	Remedy
1	Foreign object around paper tray 1	Remove the foreign object.
2	T1 paper dust cleaning roller installation failure	Re-assemble the T1 paper dust cleaning roller.
3	Registration front actuator coming off	Re-assemble the registration front actuator.
4	Connection failure of the registration front/rear sensor PCB harness	Reconnect the registration front/rear sensor PCB harness.
5	Registration front sensor failure	Replace the registration front/rear sensor PCB ASSY.
6	Fuser drive gear Z25 damaged	Replace the fuser drive gear Z25.
7	Main motor failure	Replace the process drive unit.
8	Paper feed related gear damaged	Replace the main drive unit.
9	Paper feed unit failure	Replace the paper feed unit.
10	Fuser unit damaged	Replace the fuser unit.
11	Main PCB failure	Replace the main PCB ASSY.

■ Paper jam at the T2 paper tray unit

< User Check >

- Check if the paper is loaded into the T2 paper tray unit correctly.
- Turn back the paper loaded in the T2 paper tray unit or change the orientation of the paper by 180°.
- Adjust the paper guide corresponding to the paper size.
- Check if too much paper is loaded in the tray.
- Check if the thickness of the paper is 60 to 105 g/m^2.
- Fan the stack of paper well and reinsert the papers into the paper tray.
- Replace the toner cartridge with a new one.
- Replace the drum unit with a new one.

Step	Cause	Remedy
1	Foreign object around T2 paper tray unit	Remove the foreign object.
2	Foreign object around paper path of paper tray 1	Remove the foreign object.
3	T1/T2 paper dust cleaning roller installation failure	Re-assemble the T1/T2 paper dust cleaning roller.
4	Registration front actuator coming off	Re-assemble the registration front actuator.
5	Connection failure of the registration front/rear sensor PCB harness	Reconnect the registration front/rear sensor PCB harness.
6	Connection failure of the T2 registration sensor PCB harness	Reconnect the T2 registration sensor PCB harness.
7	Connection failure of the T2 relay PCB harness	Reconnect the T2 relay PCB harness.
8	T2 relay PCB failure	Replace the T2 relay PCB ASSY.
9	Fuser drive gear Z25 damaged	Replace the fuser drive gear Z25.
10	Main motor failure	Replace the process drive unit.
11	Paper feed unit failure	Replace the paper feed unit.
12	Fuser unit damaged	Replace the fuser unit.
13	Main PCB failure	Replace the main PCB ASSY.

■ Paper jam at the MP tray

< User Check >

- Check if the paper is loaded into the MP tray correctly.
- Turn back the paper loaded in the MP tray or change the orientation of the paper by 180°.
- Adjust the paper guide corresponding to the paper size.
- Check if too much paper is loaded in the tray.
- Check if the thickness of the paper is 60 to 163 g/m^2.
- Fan the stack of paper well and reinsert the papers into the paper tray.

Step	Cause	Remedy
1	Foreign object around MP tray	Remove the foreign object.
2	MP registration front actuator coming off	Re-assemble the MP registration front actuator.
3	Connection failure of the MP registration front sensor PCB harness	Reconnect the MP registration front sensor PCB harness.
4	MP paper empty/registration front sensor failure	Replace the MP paper empty/registration front sensor PCB ASSY.
5	Main motor failure	Replace the process drive unit.
6	Paper feed unit failure	Replace the paper feed unit.
7	Fuser unit damaged	Replace the fuser unit.
8	Main PCB failure	Replace the main PCB ASSY.

■ Paper jam at the paper feeding section at the center of the machine

< User Check >

- Check if the paper is loaded into each paper tray correctly.
- Turn back the paper loaded in each paper tray or change the orientation of the paper by 180°.
- Adjust each paper guide in accordance with the paper size.
- Check if too much paper is loaded in the tray.
- Check if the thickness of the paper is 60 to 105 g/m^2.
- Fan the stack of paper well and reinsert the papers into each paper tray.
- Check that the belt unit is properly set.
- Replace the drum unit.
- Replace the belt unit.

Step	Cause	Remedy
1	Foreign object inside machine	Remove the foreign object.
2	Eject actuator coming off	Re-assemble the eject actuator.
3	Fuser cover installation failure	Re-assemble the fuser cover.
4	Connection failure of the eject sensor PCB harness	Reconnect the eject sensor PCB harness.
5	Eject sensor failure	Replace the eject sensor PCB ASSY.
6	Fuser drive gear Z25 damaged	Replace the fuser drive gear Z25.
7	Main motor or process motor failure	Replace the process drive unit.
8	Fuser unit failure	Replace the fuser unit.
9	Main PCB failure	Replace the main PCB ASSY.

■ Paper jam at the eject section

< User Check >

- Check if the paper is loaded into each paper tray correctly.
- Turn back the paper loaded in each paper tray or change the orientation of the paper by 180°.
- Adjust each paper guide in accordance with the paper size.
- Check if too much paper is loaded in the tray.
- Check if the thickness of the paper is 60 to 105 g/m^2.
- Fan the stack of paper well and reinsert the papers into each paper tray.

Step	Cause	Remedy
1	Foreign object in back cover section	Remove the foreign object.
2	Eject actuator coming off	Re-assemble the eject actuator.
3	Fuser cover installation failure	Re-assemble the fuser cover.
4	Connection failure of the eject sensor PCB harness	Reconnect the eject sensor PCB harness.
5	Eject sensor failure	Replace the eject sensor PCB ASSY.
6	Paper eject origin sensor failure	Replace the paper eject origin sensor.
7	Main motor or process motor failure	Replace the process drive unit.
8	Paper eject ASSY failure	Replace the paper eject ASSY.
9	Fuser unit failure	Replace the fuser unit.
10	Main PCB failure	Replace the main PCB ASSY.

■ Paper jam at the duplex tray

< User Check >

- Turn back the paper loaded in each paper tray or change the orientation of the paper by 180°.
- Check if the thickness of the paper is 60 to 105 g/m^2.
- Fan the stack of paper well and reinsert the papers into each paper tray.

Step	Cause	Remedy
1	Foreign object in duplex path	Remove the foreign object.
2	Eject actuator coming off	Re-assemble the eject actuator.
3	Fuser cover installation failure	Re-assemble the fuser cover.
4	Back cover failure	Replace the back cover.
5	Duplex tray failure	Replace the duplex tray.
6	Failure of duplex path of paper tray 1	Replace the paper tray 1.
7	Main PCB failure	Replace the main PCB ASSY.

4.3 Troubleshooting for Image Defects

4.3.1 Image defect examples

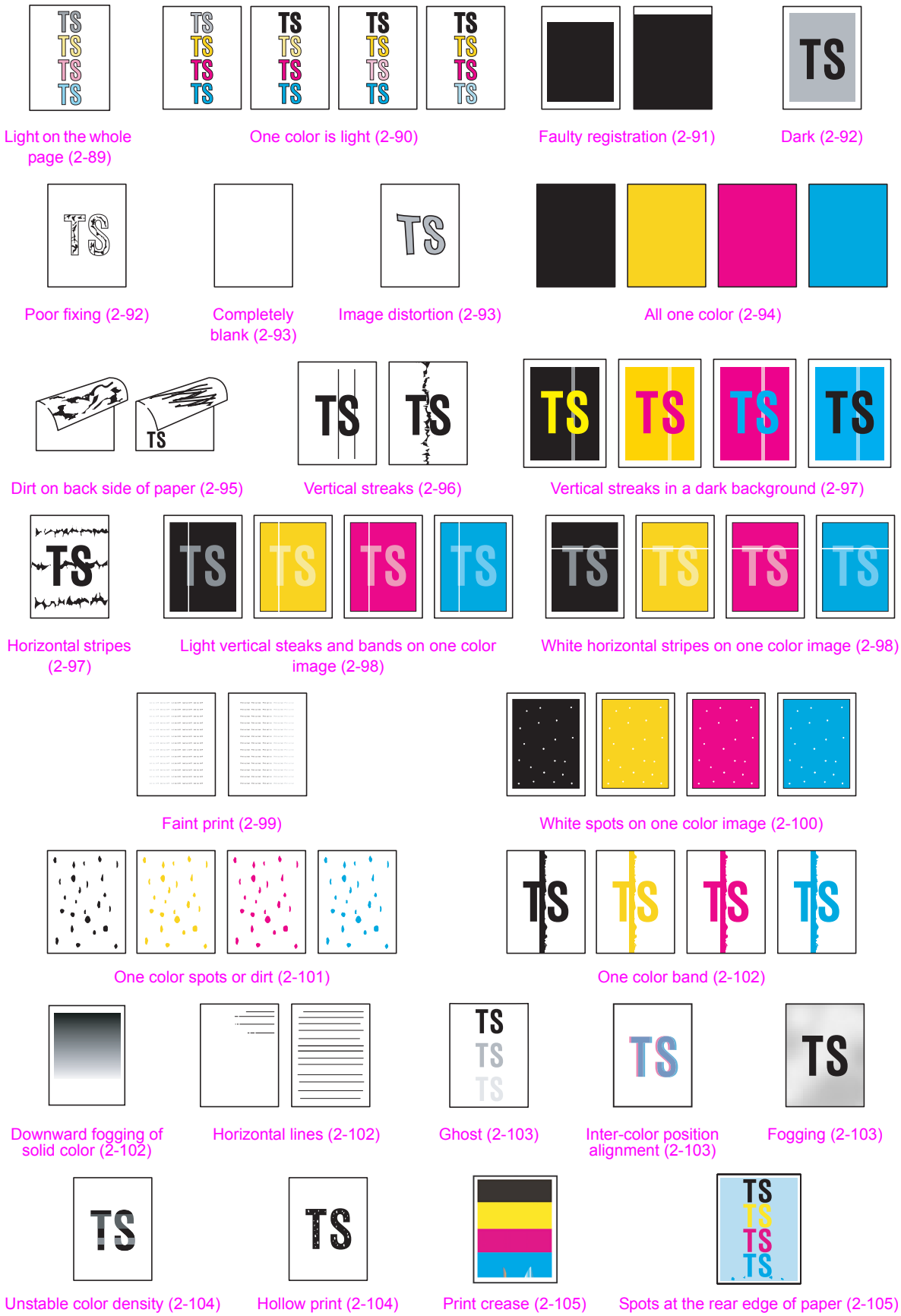

Fig. 2-7

Confidential

4.3.2 Troubleshooting image defect

Image defect related problems are end user recoverable if following the User Check items. If the same problem occurs again, follow each procedure in the order of the number described in the Step column in the tables below.

■ Light on the whole page

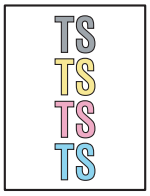

<User Check>

- Check the machine's environment. High temperature and high humidity or low temperature and low humidity conditions can cause this problem.
- If the whole page is light, toner save mode may be ON. Turn OFF the toner save mode.
- Adjust the color calibration from the control panel.
- Replace the drum unit with a new one.
- Replace the toner cartridge with a new one.
- Replace the belt unit with a new one.
- Wipe the scanner windows of the laser unit with a soft, lint-free cloth.
- Leave the machine for a while as the power remains ON. (Condensation)
- Check if paper is not damp.

Step	Cause	Remedy
1	Dirt on the electrodes of the main body and the drum unit	Clean the electrodes of the main body and the drum unit. (Refer to Fig. 2-5 (P2-55), Fig. 2-6 (P2-55).)
2	Dirt on the electrodes of the high-voltage power supply PCB	Clean the electrodes of the high-voltage power supply PCB.
3	Dirt on the density sensor	Clean the density sensor.
4	Density sensor failure	Replace the registration mark sensor unit.
5	Fuser unit failure	Replace the fuser unit.
6	High-voltage power supply PCB failure	Replace the high-voltage power supply PCB ASSY.
7	Main PCB failure	Replace the main PCB ASSY.

■ One color is light

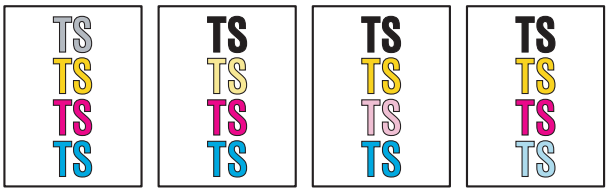

<User Check>

- Check the machine's environment. High temperature and high humidity or low temperature and low humidity conditions can cause this problem.
- Adjust the color calibration from the control panel.
- Replace the drum unit with a new one.
- Replace the toner cartridge with a new one.
- Wipe the scanner windows of the laser unit of the appropriate color with a soft, lint-free cloth.

Step	Cause	Remedy
1	Dirt on the electrodes of the main body and the drum unit	Clean the electrodes of the main body and the drum unit. (Refer to Fig. 2-5 (P2-55), Fig. 2-6 (P2-55).)
2	Dirt on the electrodes of the main body and the toner cartridge	Clean the electrodes of the main body and the toner cartridge. (Refer to Fig. 2-5 (P2-55), See the figure below.)
3	Dirt on the electrodes of the main body and the belt unit	Clean the electrodes of the main body and the belt unit. (Refer to Fig. 2-5 (P2-55), Fig. 2-9 (P2-91).)
4	Dirt on the electrodes of the high-voltage power supply PCB	Clean the electrodes of the high-voltage power supply PCB.
5	Density sensor failure	Replace the registration mark sensor unit.
6	Fuser unit failure	Replace the fuser unit.
7	High-voltage power supply PCB failure	Replace the high-voltage power supply PCB ASSY.
8	Main PCB failure	Replace the main PCB ASSY.

■ Electrodes location of the toner cartridge

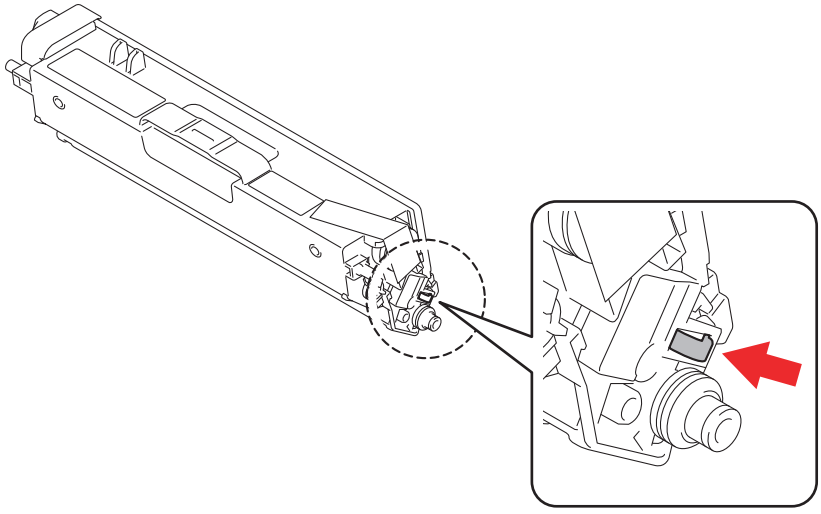

Fig. 2-8

Confidential

■ Electrodes location of belt unit

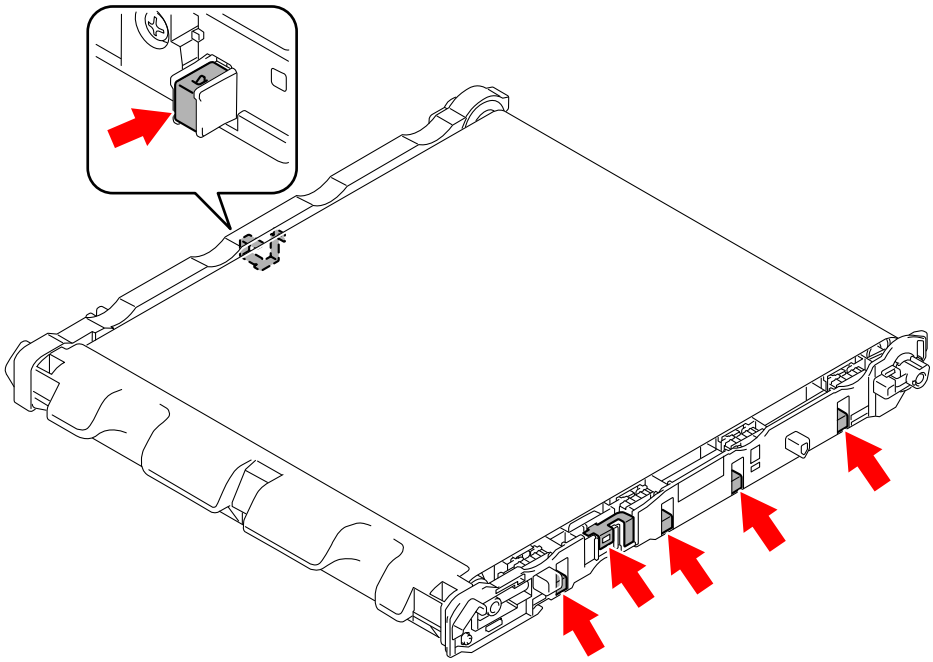

Fig. 2-9

■ Faulty registration

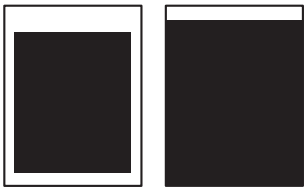

<User Check>

- Check whether appropriate paper type is selected on the driver.

Step	Cause	Remedy
1	Registration rear actuator coming off	Re-assemble the registration rear actuator.
2	Laser unit failure	Replace the laser unit.
3	Main PCB failure	Replace the main PCB ASSY.

Confidential

■ Dark

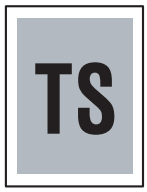

<User Check>

- Check the machine's environment. High temperature and high humidity or low temperature and low humidity conditions can cause this problem.
- After a new toner cartridge is detected, check if other toner cartridge is not inserted.
- Execute density adjustment from the control panel.
- Clean the corona wire of all four colors on the drum unit.
- Replace the drum unit with a new one.
- Replace the toner cartridge with a new one.
- Replace the belt unit with a new one.

Step	Cause	Remedy
1	Dirt on the electrodes of the main body and the drum unit	Clean the electrodes of the main body and the drum unit. (Refer to Fig. 2-5 (P2-55), Fig. 2-6 (P2-55).)
2	Dirt on the electrodes of the main body and the toner cartridge	Clean the electrodes of the main body and the toner cartridge. (Refer to Fig. 2-5 (P2-55), Fig. 2-8 (P2-90).)
3	Dirt on the electrodes of the main body and the belt unit	Clean the electrodes of the main body and the belt unit. (Refer to Fig. 2-5 (P2-55), Fig. 2-9 (P2-91).)
4	Dirt on the electrodes of the high-voltage power supply PCB	Clean the electrodes of the high-voltage power supply PCB.
5	Density sensor failure	Replace the registration mark sensor unit.
6	Fuser unit failure	Replace the fuser unit.
7	High-voltage power supply PCB failure	Replace the high-voltage power supply PCB ASSY.
8	Main PCB failure	Replace the main PCB ASSY.
9	Laser unit failure	Replace the laser unit.

■ Poor fixing

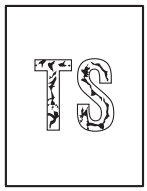

<User Check>

- Check the machine's environment. High temperature and high humidity or low temperature and low humidity conditions can cause this problem.
- Clean the corona wire of all four colors on the drum unit.
- Replace the drum unit with a new one.
- Replace the toner cartridge with a new one.
- Replace the belt unit with a new one.
- Wipe the scanner windows of the laser unit with a soft, lint-free cloth.

Step	Cause	Remedy
1	Dirt on the electrodes of the main body and the belt unit	Clean the electrodes of the main body and the belt unit. (Refer to Fig. 2-5 (P2-55), Fig. 2-9 (P2-91).)
2	Fuser unit failure	Replace the fuser unit.
3	High-voltage power supply PCB failure	Replace the high-voltage power supply PCB ASSY.
4	Low-voltage power supply PCB failure	Replace the low-voltage power supply PCB unit.
5	Laser unit failure	Replace the laser unit.
6	Main PCB failure	Replace the main PCB ASSY.

■ Completely blank

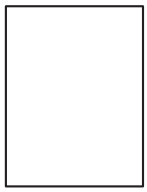

<User Check>

- Clean the corona wire of all four colors on the drum unit.
- Replace the drum unit with a new one.
- Replace the toner cartridge with a new one.
- Install the latest firmware.

Step	Cause	Remedy
1	Dirt on the electrodes of the main body and the drum unit	Clean the electrodes of the main body and the drum unit. (Refer to Fig. 2-5 (P2-55), Fig. 2-6 (P2-55).)
2	Dirt on the electrodes of the main body and the toner cartridge	Clean the electrodes of the main body and the toner cartridge. (Refer to Fig. 2-5 (P2-55), Fig. 2-8 (P2-90).)
3	Dirt on the electrodes of the main body and the belt unit	Clean the electrodes of the main body and the belt unit. (Refer to Fig. 2-5 (P2-55), Fig. 2-9 (P2-91).)
4	Connection failure of the laser unit flat cable	Reconnect the laser unit flat cable.
5	Laser unit flat cable failure	Replace the laser unit flat cable.
6	Dirt on the electrodes of the high-voltage power supply PCB	Clean the electrodes of the high-voltage power supply PCB.
7	Laser unit failure	Replace the laser unit.
8	Main PCB failure	Replace the main PCB ASSY.

■ Image distortion

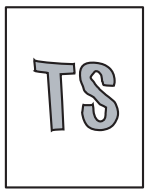

<User Check>

- Replace the belt unit with a new one.

Step	Cause	Remedy
1	Laser unit installation failure	Re-assemble the laser unit.
2	Laser unit failure	Replace the laser unit.
3	Main PCB failure	Replace the main PCB ASSY.

■ All one color

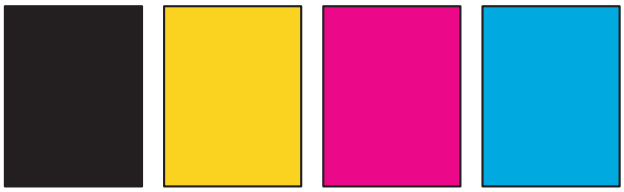

<User Check>

- Clean the corona wire of all four colors on the drum unit.
- Replace the drum unit with a new one.

Step	Cause	Remedy
1	Dirt on the electrodes of the main body and the drum unit	Clean the electrodes of the main body and the drum unit. (Refer to Fig. 2-5 (P2-55), Fig. 2-6 (P2-55).)
2	Dirt on the electrodes of the main body and the toner cartridge	Clean the electrodes of the main body and the toner cartridge. (Refer to Fig. 2-5 (P2-55), Fig. 2-8 (P2-90).)
3	Dirt on the electrodes of the main body and the belt unit	Clean the electrodes of the main body and the belt unit. (Refer to Fig. 2-5 (P2-55), Fig. 2-9 (P2-91).)
4	Laser unit flat cable failure	Replace the laser unit flat cable.
5	Dirt on the electrodes of the high-voltage power supply PCB	Clean the electrodes of the high-voltage power supply PCB.
6	High-voltage power supply PCB failure	Replace the high-voltage power supply PCB ASSY.
7	Laser unit failure	Replace the laser unit.
8	Main PCB failure	Replace the main PCB ASSY.

■ Dirt on back side of paper

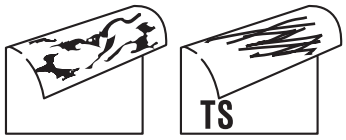

<User Check>

- This symptom might stop occurring after making several prints.
- Replace the toner cartridge with a new one.
- Replace the belt unit.
- Replace the waste toner box.

Step	Cause	Remedy
1	Dirt in the paper feed system	Wipe dirt off.
2	Dirt on the electrodes of the main body and the belt unit	Clean the electrodes of the main body and the belt unit. (Refer to Fig. 2-5 (P2-55), Fig. 2-9 (P2-91).)
3	Dirt on the electrodes of the main body and the waste toner box	Clean the electrodes of the main body and the waste toner box. (Refer to Fig. 2-5 (P2-55), See the figure below.)
4	Dirt on the cleaner pinch roller of the fuser cover	Replace the cleaner pinch roller S ASSY.
5	Dirt on the fuser unit	Replace the fuser unit.
6	High-voltage power supply PCB failure	Replace the high-voltage power supply PCB ASSY.

■ Electrodes location of waste toner box

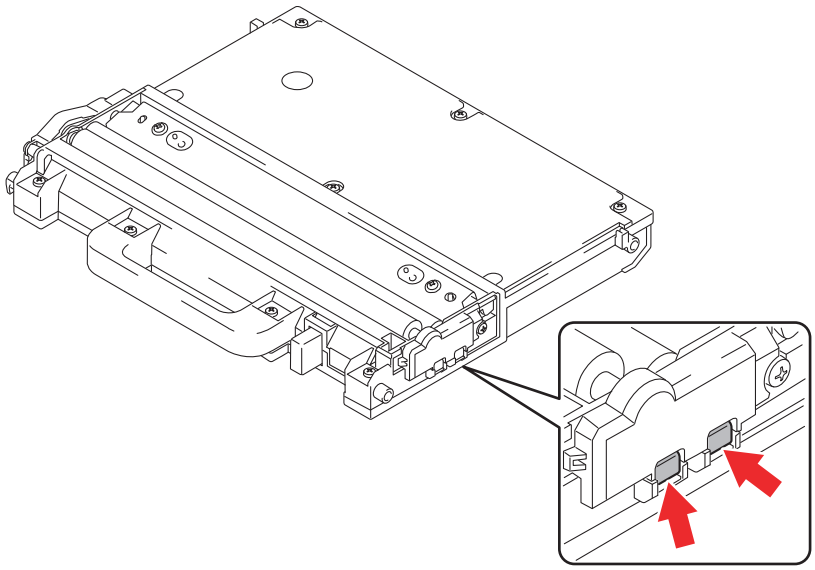

Fig. 2-10

■ Vertical streaks

<User Check>

- Clean the corona wire of all four colors on the drum unit.
- Return the cleaning tab of the corona wire to the ▲ position.
- This symptom might stop occurring after making several prints.
- Refer to the User's guide and remove the dirt on the exposure drum using a cotton swab.
- Replace the drum unit with a new one.
- Replace the toner cartridge with a new one.
- Wipe the scanner windows of the laser unit with a soft, lint-free cloth.

Step	Cause	Remedy
1	Dirt in the paper feed system	Wipe dirt off.
2	Installation failure of each FG wire and/or FG plate (Grounding is not performed correctly.)	Retighten the screws of each FG wire and/or FG plate. Repair the bend of the tray ground spring of the paper tray. (See the figure below.)
3	Dirt on the exposure drum	Perform drum cleaning. (Refer to "2.2 Drum Cleaning" in Chapter 5.)
4	Dirt on the cleaner pinch roller of the fuser cover	Replace the cleaner pinch roller S ASSY.
5	Dirt on the fuser unit	Replace the fuser unit.
6	Laser unit failure	Replace the laser unit.

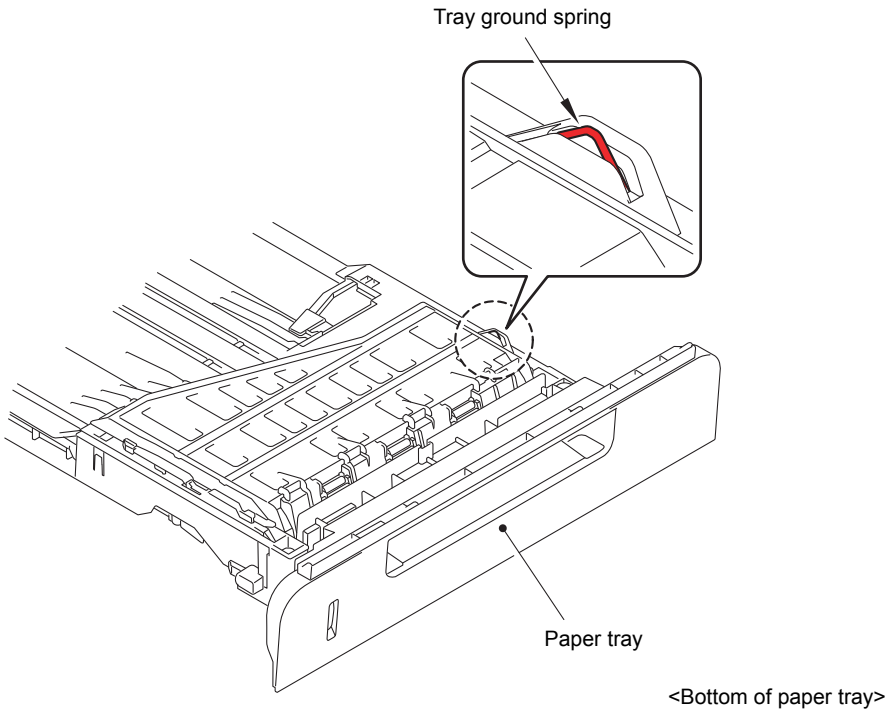

Fig. 2-11

■ Vertical streaks in a dark background

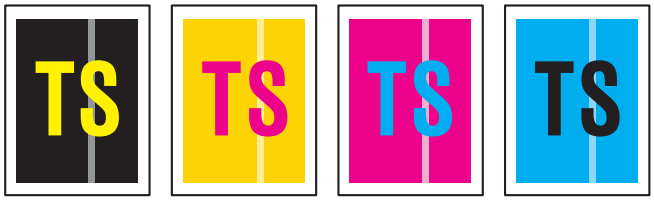

<User Check>

- Clean the corona wire of all four colors on the drum unit.
- This symptom might stop occurring after making several prints.
- Refer to the User's guide and remove the dirt on the exposure drum using a cotton swab.
- Leave the machine for a while as the power remains ON. (Condensation)
- Wipe the scanner windows of the laser unit with a soft, lint-free cloth.
- Replace the drum unit with a new one.
- Replace the toner cartridge with a new one.

Step	Cause	Remedy
1	Dirt on charged electrode	Clean the electrodes of the drum unit and the main body. (Refer to Fig. 2-6 (P2-55), Fig. 2-5 (P2-55).)
2	Dirt on the exposure drum	Perform drum cleaning. (Refer to "2.2 Drum Cleaning" in Chapter 5.)
3	Laser unit failure	Replace the laser unit.

■ Horizontal stripes

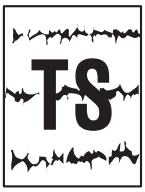

<User Check>

- Clean the corona wire of all four colors on the drum unit.
- This symptom might stop occurring after making several prints.
- Refer to the User's guide and remove the dirt on the exposure drum using a cotton swab.
- Replace the drum unit with a new one.
- Replace the toner cartridge with a new one.

Step	Cause	Remedy
1	Dirt on charged electrode	Clean the electrodes of the drum unit and the main body. (Refer to Fig. 2-6 (P2-55), Fig. 2-5 (P2-55).)
2	Dirt on the exposure drum	Perform drum cleaning. (Refer to "2.2 Drum Cleaning" in Chapter 5.)
3	Installation failure of each FG wire and/or FG plate (Grounding is not performed correctly.)	Retighten the screws of each FG wire and/or FG plate. Repair the bend of the tray ground spring of the paper tray. (Refer to Fig. 2-11 (P2-96).)
4	Scratch and dirt on fuser unit	Replace the fuser unit.
5	High-voltage power supply PCB failure	Replace the high-voltage power supply PCB ASSY.

■ Light vertical steaks and bands on one color image

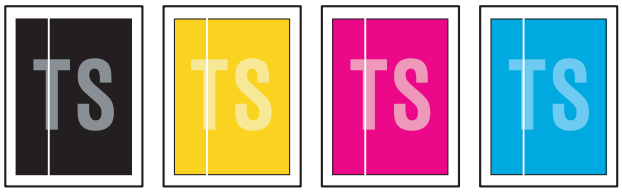

<User Check>

- Clean the corona wire of all four colors on the drum unit.
- Check if dust adheres to the area of the toner cartridge corresponding to the location where the white vertical streak appears.
- Refer to the User's guide and remove the dirt on the exposure drum using a cotton swab.
- Wipe the scanner windows of the laser unit with a soft, lint-free cloth.
- Replace the drum unit with a new one.
- Replace the toner cartridge with a new one.

Step	Cause	Remedy
1	Dirt on charged electrode	Clean the electrodes of the drum unit and the main body. (Refer to Fig. 2-6 (P2-55), Fig. 2-5 (P2-55).)
2	Dirt on the exposure drum	Perform drum cleaning. (Refer to "2.2 Drum Cleaning" in Chapter 5.)
3	Laser unit failure	Replace the laser unit.

■ White horizontal stripes on one color image

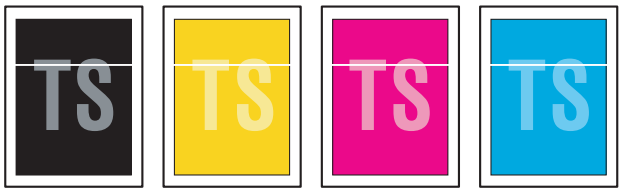

<User Check>

- This symptom might stop occurring after making several prints.
- Replace the drum unit with a new one.
- Replace the toner cartridge with a new one.

Step	Cause	Remedy
1	Dirt on charged electrode	Clean the electrodes of the drum unit and the main body. (Refer to Fig. 2-6 (P2-55), Fig. 2-5 (P2-55).)
2	Dirt on the exposure drum	Perform drum cleaning. (Refer to "2.2 Drum Cleaning" in Chapter 5.)
3	Scratch and dirt on fuser unit	Replace the fuser unit.
4	High-voltage power supply PCB failure	Replace the high-voltage power supply PCB ASSY.

■ Faint print

<User Check>

- Check that the machine is set on a level surface.
- Wipe the scanner windows of the laser unit with a soft, lint-free cloth.
- Replace the drum unit with a new one.
- Replace the toner cartridge with a new one.

Step	Cause	Remedy
1	Laser unit failure	Replace the laser unit.
2	Fuser unit failure	Replace the fuser unit.
3	Main PCB failure	Replace the main PCB ASSY.

■ White spots on one color image

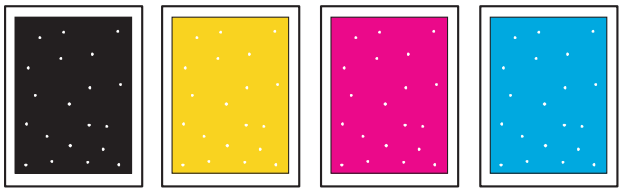

<User Check>

- Check if the fuser fan and/or blower are not blocked.
- Refer to the User's guide and remove the dirt on the exposure drum using a cotton swab.
- Replace the drum unit with a new one.
- Replace the toner cartridge with a new one.
- Replace the belt unit with a new one.

Step	Cause	Remedy
1	Paper dust is accumulated	Referring to the figure below, remove paper dust attached on the paper dust cleaning roller.
2	Dirt on the exposure drum	Perform drum cleaning. (Refer to "2.2 Drum Cleaning" in Chapter 5.)
3	Toner filter is clogged	Clean the toner filter.
4	Scratch and dirt on fuser unit	Replace the fuser unit.
5	High-voltage power supply PCB failure	Replace the high-voltage power supply PCB ASSY.

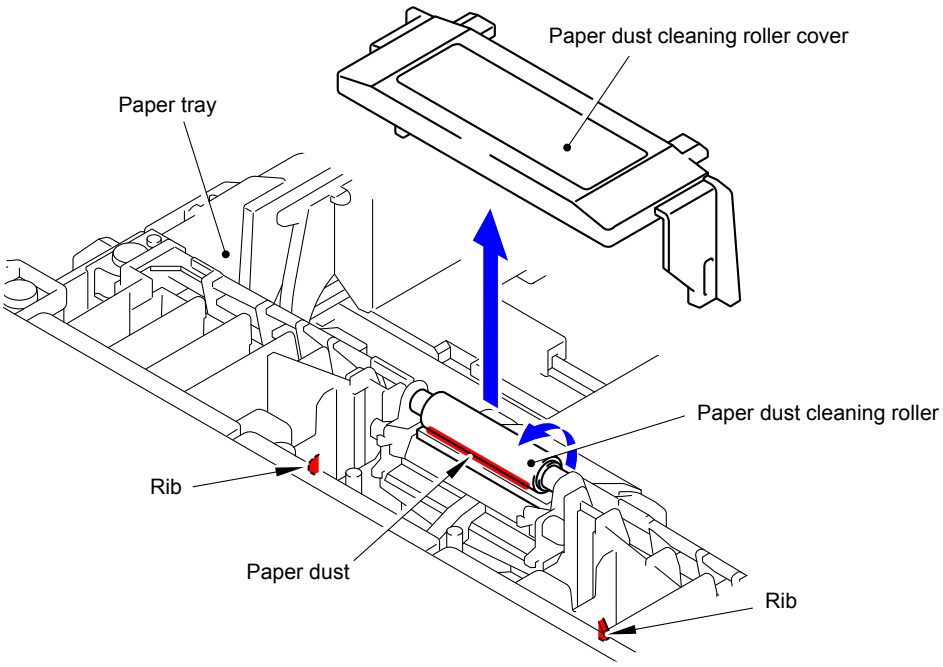

Fig. 2-12

■ One color spots or dirt

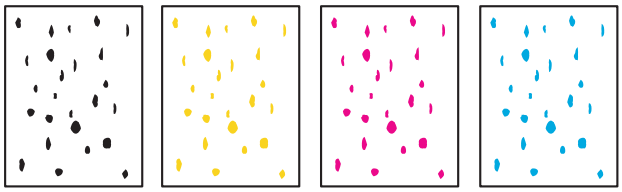

<User Check>

- Check if damp paper is used.
- Refer to the User's guide and remove the dirt on the exposure drum using a cotton swab.
- Replace the drum unit with a new one.
- Replace the toner cartridge with a new one.
- Replace the belt unit with a new one.

Step	Cause	Remedy
1	Paper dust is accumulated	Clean the paper dust cleaning roller. (Refer to Fig. 2-12 (P2-100).)
2	Dirt on the exposure drum	Perform drum cleaning. (Refer to "2.2 Drum Cleaning" in Chapter 5.)
3	Toner filter is clogged	Clean the toner filter.
4	Scratch and dirt on fuser unit	Replace the fuser unit.
5	High-voltage power supply PCB failure	Replace the high-voltage power supply PCB ASSY.

Note:
Image defects which occur periodically may be caused by a failure of the rollers.
Use the diameters of the rollers or the pitches which appear in images shown in the table below to identify the cause of the problem.

<Pitches on images caused by rollers>

Part name	The pitch which appears in the image
Develop roller	30 mm
Exposure drum	94 mm
Heat roller of the fuser unit	78.5 mm
Pressure roller of the fuser unit	78.5 mm

■ One color band

<User Check>

- Clean the corona wire of all four colors on the drum unit.
- Return the cleaning tab of the corona wire to the ▲ position.
- This symptom might stop occurring after making several prints.
- Refer to the User's guide and remove the dirt on the exposure drum using a cotton swab.
- Replace the drum unit with a new one.
- Replace the toner cartridge with a new one.

Step	Cause	Remedy
1	Installation failure of each FG wire and/or FG plate (Grounding is not performed correctly.)	Retighten the screws of each FG wire and/or FG plate. Repair the bend of the tray ground spring of the paper tray. (Refer to Fig. 2-11 (P2-96).)
2	Dirt on the exposure drum	Perform drum cleaning. (Refer to "2.2 Drum Cleaning" in Chapter 5.)
3	Laser unit failure	Replace the laser unit.

■ Downward fogging of solid color

<User Check>

- Replace the toner cartridge with a new one.

Step	Cause	Remedy
1	High-voltage power supply PCB failure	Replace the high-voltage power supply PCB ASSY.
2	Main PCB failure	Replace the main PCB ASSY.

■ Horizontal lines

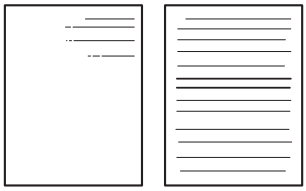

<User Check>

- This symptom might stop occurring after making several prints.
- Refer to the User's guide and remove the dirt on the exposure drum using a cotton swab.
- Replace the drum unit with a new one.
- Replace the toner cartridge with a new one.

Step	Cause	Remedy
1	Dirt on charged electrode	Clean the electrodes of the drum unit and main body. (Refer to Fig. 2-6 (P2-55), Fig. 2-5 (P2-55).)
2	Dirt on the exposure drum	Perform drum cleaning. (Refer to "2.2 Drum Cleaning" in Chapter 5.)
3	Scratch and dirt on fuser unit	Replace the fuser unit.
4	High-voltage power supply PCB failure	Replace the high-voltage power supply PCB ASSY.

■ Ghost

<User Check>

- Check the machine's environment. High temperature and high humidity or low temperature and low humidity conditions can cause this problem.
- Check whether appropriate paper type is selected on the driver.
- Select "Improve Toner Fixing Mode" in the driver.
- Make a print in the color mode.
- Replace the drum unit with a new one.

Step	Cause	Remedy
1	Scratch and dirt on fuser unit	Replace the fuser unit.
2	High-voltage power supply PCB failure	Replace the high-voltage power supply PCB ASSY.

■ Inter-color position alignment

<User Check>

- Implement the adjustment of color registration (adjustment of inter-color position alignment).
- Replace the belt unit with a new one.
- Replace the drum unit with a new one.
- Replace the waste toner box with a new one.

Step	Cause	Remedy
1	Registration mark sensor L or registration mark sensor R failure	Replace the registration mark sensor unit.
2	Main PCB failure	Replace the main PCB ASSY.

■ Fogging

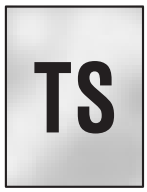

<User Check>

- Check the machine's environment. High temperature and high humidity or low temperature and low humidity conditions can cause this problem.
- Check if the acid paper is not used.
- This symptom might stop occurring after making several prints.
- Replace the toner cartridge with a new one.
- Replace the drum unit with a new one.

Step	Cause	Remedy
1	Toner/new sensor PCB failure	Replace the toner/new sensor PCB ASSY.
2	High-voltage power supply PCB failure	Replace the high-voltage power supply PCB ASSY.
3	Main PCB failure	Replace the main PCB ASSY.

Note:
This problem often occurs when the drum unit or toner cartridge is nearly at the end of life.

■ Unstable color density

TS

<User Check>

- Make a print on a different type of paper.
- Replace the belt unit with a new one.
- Replace the waste toner box with a new one.
- Replace the toner cartridge with a new one.
- Replace the drum unit with a new one.

Step	Cause	Remedy
1	Dirt on the electrodes of the main body and the drum unit	Clean the electrodes of the main body and the drum unit. (Refer to Fig. 2-5 (P2-55), Fig. 2-6 (P2-55).)
2	Dirt on the electrodes of the main body and the toner cartridge	Clean the electrodes of the main body and the toner cartridge. (Refer to Fig. 2-5 (P2-55), Fig. 2-8 (P2-90).)
3	Dirt on the electrodes of the main body and the belt unit	Clean the electrodes of the main body and the belt unit. (Refer to Fig. 2-5 (P2-55), Fig. 2-9 (P2-91).)
4	High-voltage power supply PCB failure	Replace the high-voltage power supply PCB ASSY.
5	Laser unit failure	Replace the laser unit.
6	Main PCB failure	Replace the main PCB ASSY.

■ Hollow print

TS

<User Check>

- Check the machine's environment. High temperature and high humidity or low temperature and low humidity conditions can cause this problem.
- Refer to the User's guide and remove the dirt on the exposure drum using a cotton swab.
- Replace the toner cartridge with a new one.
- Replace the drum unit with a new one.

Step	Cause	Remedy
1	Dirt in the paper dust cleaning roller	Clean the paper dust cleaning roller. (Refer to Fig. 2-12 (P2-100).)
2	Dirt on the exposure drum	Perform drum cleaning. (Refer to "2.2 Drum Cleaning" in Chapter 5.)
3	Scratch and dirt on fuser unit	Replace the fuser unit.
4	High-voltage power supply PCB failure	Replace the high-voltage power supply PCB ASSY.

■ Print crease

<User Check>

- Check the machine's environment. High temperature and high humidity or low temperature and low humidity conditions can cause this problem.
- Change the paper to thick paper.
- Check if paper is not damp.
- Check if the thickness of the paper is properly set in the driver.
- Print with the envelope lever is lowered. (Refer to the figure below.)

Step	Cause	Remedy
1	Fuser unit failure	Replace the fuser unit.

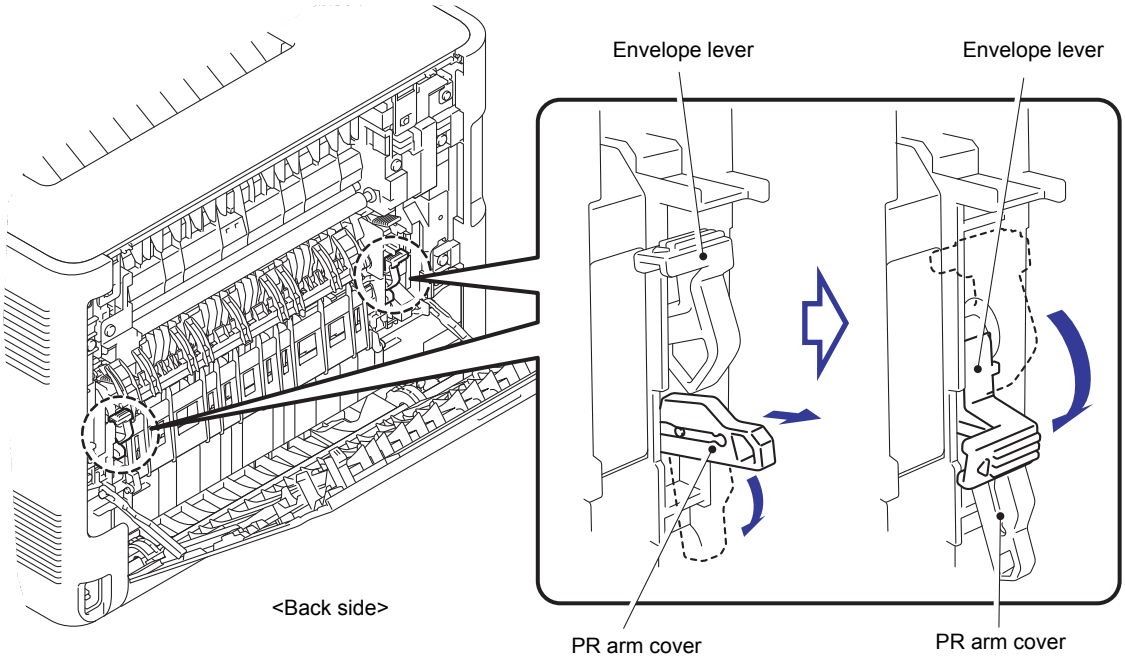

Fig. 2-13

■ Spots at the rear edge of paper

<User Check>

- Check the machine's environment. High temperature and high humidity or low temperature and low humidity conditions can cause this problem.
- Print with the envelope lever is lowered. (See the figure above.)

Step	Cause	Remedy
1	Fuser unit failure	Replace the fuser unit.

4.4 Troubleshooting for Software Problems

The end user can solve problems pertaining to software, for instance, print cannot be made from a computer although test print and printer setting print can be made from the machine, by following the User Check items. If the same problem occurs again, follow each procedure in the order of the number described in the Step column in the tables below.

4.4.1 Unable to receive data

< User Check >

- Check that the USB cable or LAN cable is not damaged.
- Check that the correct machine is selected if you have an interface switching device.
- Check the descriptions on the software setting in the User's guide.
- Check the driver setting.
- Restore the settings at factory shipment. (Refer to User's guide.)

Step	Cause	Remedy
1	Machine connection	When using Macintosh, check the product ID* in Macintosh and update the firmware if the product ID is not correct.
2	Main PCB failure	Replace the main PCB ASSY.

* Follow the procedures below to verify the product ID in Macintosh.

(1) Select [About This Mac] from the [Apple] menu.

(2) Click the [More Info...] button in the [About This Mac] dialog box.

(3) Select [USB] under the [Hardware] in [Contents] on the left side.

(4) Select the machine [HL-XXXX] from [USB Device Tree].

(5) Check [Product ID] in [HL-XXXX].

■ Product ID (Hexadecimal)

HL-L8250CDN: 0065h

HL-L8350CDW: 0066h

HL-L9200CDW: 0067h

4.5 Troubleshooting for Network Problems

4.5.1 Cannot make a print through network connection

< User Check >

- Check the descriptions in the network User’s guide.
- Check the network connection.
- Perform network reset. (Refer to User's guide.)
- Check the LAN cable.

Step	Cause	Remedy
1	Connection failure of the wireless LAN PCB harness	Reconnect the wireless LAN PCB harness.
2	Wireless LAN PCB failure	Replace the wireless LAN PCB ASSY.
3	LAN terminal pin deformation Main PCB failure	Replace the main PCB ASSY.

Confidential

4.6 Troubleshooting for Control Panel Problems

4.6.1 Nothing is displayed on the LCD/LED

< User Check >

- Turn the power OFF/ON.

Step	Cause	Remedy
1	The version of the panel firmware and the main firmware do not match. (Model with touch panel)	Install the latest panel firmware and main firmware.
2	Connection failure of the key PCB flat cable (Model with touch panel)	Reconnect the key PCB flat cable.
3	Connection failure of the panel PCB harness (Model without touch panel)	Reconnect the panel PCB harness.
4	Connection failure of the LCD flat cable (Model without touch panel)	Reconnect the LCD flat cable.
5	Connection failure of the low-voltage power supply PCB harness	Reconnect the low-voltage power supply PCB harness.
6	AC cord failure	Replace the AC cord.
7	Key PCB flat cable failure (Model with touch panel)	Replace the key PCB flat cable.
8	Panel control PCB failure (Model with touch panel)	Replace the panel control PCB ASSY.
9	LCD unit failure (Model with touch panel)	Replace the LCD panel ASSY.
10	Key PCB failure (Model with touch panel)	Replace the panel case ASSY.
11	Panel PCB failure (Model without touch panel)	Replace the panel PCB ASSY.
12	LCD failure (Model without touch panel)	Replace the LCD.
13	Low-voltage power supply PCB failure	Replace the low-voltage power supply PCB unit.
14	Main PCB failure	Replace the main PCB ASSY.

4.6.2 Unable to perform panel operation

< User Check >

- Turn the power OFF/ON.

Step	Cause	Remedy
1	The version of the panel firmware and the main firmware do not match. (Model with touch panel)	Install the latest panel firmware and main firmware.
2	Deviated adjustment of touch panel (Model with touch panel)	Refer to "1.3.14 Adjustment of touch panel (Function code 61) (Model with touch panel only)" in Chapter 5 and perform adjustments.
3	Connection failure of the key PCB flat cable (Model with touch panel)	Reconnect the key PCB flat cable.
4	Connection failure of the panel PCB harness (Model without touch panel)	Reconnect the panel PCB harness.
5	Rubber key installation failure (Model without touch panel)	Re-assemble the rubber key.
6	Connection failure of the low-voltage power supply PCB harness	Reconnect the low-voltage power supply PCB harness.
7	Key PCB flat cable failure (Model with touch panel)	Replace the key PCB flat cable.
8	Panel control PCB failure (Model with touch panel)	Replace the panel control PCB ASSY.
9	LCD unit failure (Model with touch panel)	Replace the LCD panel ASSY.
10	Key PCB failure (Model with touch panel)	Replace the panel case ASSY.
11	Panel PCB failure (Model without touch panel)	Replace the panel PCB ASSY.
12	Low-voltage power supply PCB failure	Replace the low-voltage power supply PCB unit.
13	Main PCB failure	Replace the main PCB ASSY.

4.7 Troubleshooting for Toner Cartridge and Drum Unit Problems

4.7.1 New toner not detected

< User Check >

- Check if the supplied toner cartridge is installed.
- Be sure to set a new toner cartridge.
- Install a genuine toner cartridge.

Step	Cause	Remedy
1	New toner actuator coming off	Re-assemble the new toner actuator.
2	Connection failure of the new toner sensor PCB harness	Reconnect the toner/new sensor PCB harness.
3	Main PCB failure	Replace the main PCB ASSY.

4.7.2 Toner cartridge not detected

< User Check >

- Re-assemble the toner cartridge.

Step	Cause	Remedy
1	High-voltage power supply PCB failure	Replace the high-voltage power supply PCB ASSY.
2	New toner sensor PCB failure	Replace the toner/new sensor PCB ASSY.
3	Main PCB failure	Replace the main PCB ASSY.

4.7.3 Toner replacement message displayed on LCD is not cleared

< User Check >

- Be sure to set a new toner cartridge.
- Install a genuine toner cartridge.

Step	Cause	Remedy
1	The power of the machine is turned OFF while a new toner cartridge is detected	Perform toner manual reset. (Refer to “2.1 Toner Manual Reset Function” in Chapter 5.)
2	New toner actuator coming off	Re-assemble the new toner actuator.
3	Connection failure of the new toner sensor PCB harness	Reconnect the toner/new sensor PCB harness.
4	Main PCB failure	Replace the main PCB ASSY.

4.7.4 Drum error

< User Check >

- Clean the corona wire.
- Replace the drum unit with a new one.

Step	Cause	Remedy
1	Dirt on the GRID terminals or CHG terminals of the main body and the drum unit	Clean the GRID terminals and CHG terminals of the main body and the drum unit.
2	Dirt on the terminal of the high-voltage power supply PCB	Clean the terminal of the high-voltage power supply PCB.
3	High-voltage power supply PCB failure	Replace the high-voltage power supply PCB ASSY.
4	Toner sensor failure	Replace the toner/new sensor PCB ASSY.
5	Main PCB failure	Replace the main PCB ASSY.

4.7.5 Drum replacement message displayed on LCD is not cleared

< User Check >

- Refer to "2.3 Counter Reset of Consumable Parts (Drum Unit/Belt Unit)" in Chapter 5, and reset the drum counter.

Step	Cause	Remedy
1	Main PCB failure	Replace the main PCB ASSY.

4.8 Troubleshooting for Fuser Unit Problems

4.8.1 Fuser unit failure

Step	Cause	Remedy
1	Connection failure of the center thermistor harness	Reconnect the center thermistor harness.
2	Connection failure of the side thermistor harness	Reconnect the side thermistor harness.
3	Connection failure of the heater harness	Reconnect the heater harness.
4	Connection failure of the eject sensor PCB harness	Reconnect the eject sensor PCB harness.
5	Eject sensor PCB failure	Replace the eject sensor PCB ASSY.
6	Low-voltage power supply PCB failure	Replace the low-voltage power supply PCB unit.
7	Fuser unit failure	Replace the fuser unit.
8	Main PCB failure	Replace the main PCB ASSY.

Note:

- Turn the power OFF and then ON again. After the machine is left as it is for about 10 minutes, this problem may be resolved.
- If test print is performed in maintenance mode for service personnel, the machine may recover from the error. However, note that if this operation is performed while the heater has not cooled down, the fuser unit may melt.

4.9 Troubleshooting for Laser Unit Problems

4.9.1 Laser unit failure

Step	Cause	Remedy
1	Connection failure of the laser unit flat cable	Reconnect the laser unit flat cable.
2	Connection failure of the polygon motor harness	Reconnect the polygon motor harness.
3	Laser unit failure	Replace the laser unit.
4	Main PCB failure	Replace the main PCB ASSY.

4.10 Troubleshooting for PCB Problems

4.10.1 Main PCB failure

< User Check >

- Turn the power OFF/ON.
- Install the latest firmware.
- Check if PC-print is not prohibited.
- Check the print restricted ID.
- Replace the damaged DIMM.
- Check if print data is not damaged.

Step	Cause	Remedy
1	Main PCB failure	Replace the main PCB ASSY.

4.10.2 Full memory

< User Check >

- Print the stored data.
- Reduce the amount of data or lower the resolution.

Step	Cause	Remedy
1	Main PCB failure	Replace the main PCB ASSY.

4.10.3 Problem of print restriction/ID authentication

< User Check >

- Check if PC-print is not prohibited.
- Check the print restricted ID.

Step	Cause	Remedy
1	ID is forgotten	Execute Function code 01 to initialize the ID.
2	Main PCB failure	Replace the main PCB ASSY.

4.11 Troubleshooting for Other Problems

4.11.1 Cannot make print

< User Check >

- Turn the power OFF/ON.
- Check if the maximum number of pages that can be printed is exceeded.
- Check if PC-print is not prohibited.
- Check the print restricted ID.
- Check if print data is not damaged.

Step	Cause	Remedy
1	Main PCB failure	Replace the main PCB ASSY.

4.11.2 Problem of USB direct interface

< User Check >

- Replace the USB flash memory.
- Check if the extension of the data in the USB flash memory is correct.

Step	Cause	Remedy
1	Connection failure of the USB host relay PCB harness	Reconnect the USB host relay PCB harness.
2	USB host PCB failure	Replace the USB host PCB ASSY.
3	Main PCB failure	Replace the main PCB ASSY.

4.11.3 Cannot update firmware

< User Check >

- Check if other function is being in process.
- Turn the power OFF/ON.

Step	Cause	Remedy
1	Firmware version does not match	Reinstall the latest versions of all the firmwares in the order of the sub firmware, panel firmware, main firmware, and high-voltage firmware. (The panel firmware is available only for the model with touch panel.)
2	Main PCB failure	Replace the main PCB ASSY.

CHAPTER 3 DISASSEMBLY AND ASSEMBLY

1. SAFETY PRECAUTIONS

To avoid creating secondary problems by mishandling, follow the warnings and precautions below during maintenance work.

WARNING

Some parts inside the machine are extremely hot immediately after the machine is used. When opening the front cover or back cover to access any parts inside the machine, never touch the shaded parts shown in the following figures.

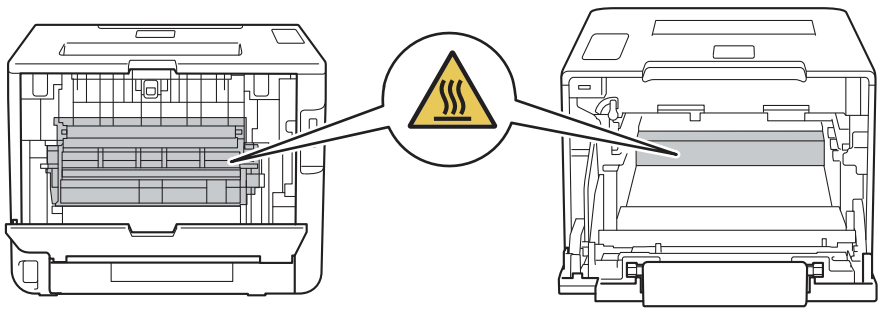

Note:

- Be careful not to lose screws, washers, or other parts removed.
- Be sure to apply grease to the gears and applicable positions specified in this chapter.
- When using soldering irons or other heat-generating tools, take care not to accidentally damage parts such as wires, PCBs and covers.
- Static electricity charged in your body may damage electronic parts. When transporting PCBs, be sure to wrap them in conductive sheets.
- When replacing the PCB and all the other related parts, put on a grounding wrist band and perform the job on a static mat. Also take care not to touch the conductor sections on the flat cables or on the wire harness.
- After disconnecting flat cables, check that each cable is not damaged at its end or short-circuited.
- When connecting flat cables, do not insert them at an angle. After insertion, check that the cables are not at an angle.
- When connecting or disconnecting harnesses, hold the connector body, not the cables. If the connector is locked, release it first.
- After a repair, check not only the repaired portion but also handling of harnesses. Also check that other related portions are functioning properly before operational checks.
- After an assembly, recommend the operation of “dielectric strength voltage check” and “continuity check”.
- There must be no damage in the insulation sheet.
- After a repair, update the firmware to the latest version.

2. PACKING

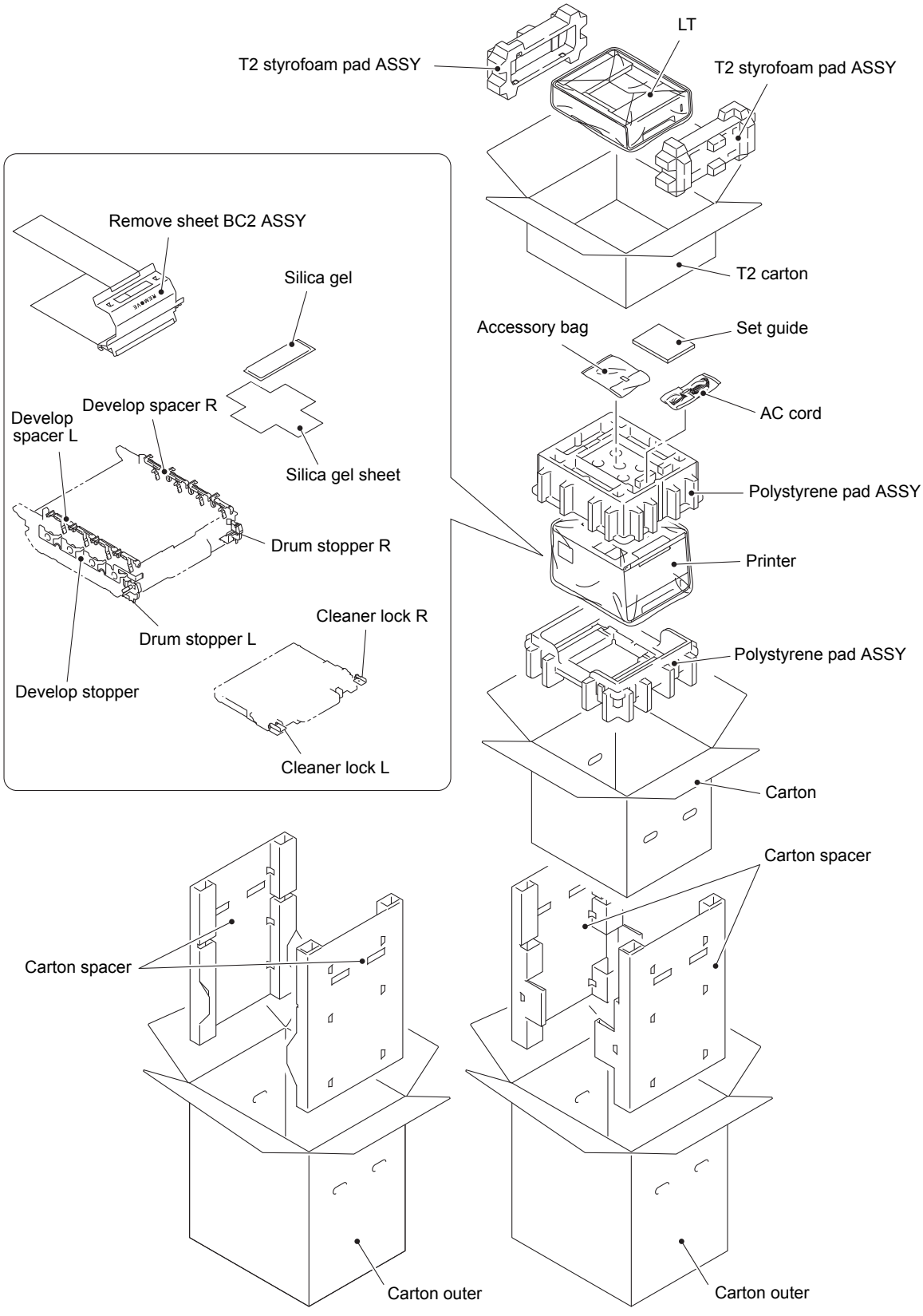

Confidential

3. SCREW CATALOGUE

Taptite bind B

Taptite bind B M3x8	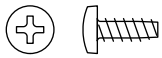
Taptite bind B M3x10	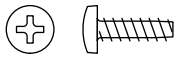
Taptite, bind B M4x10	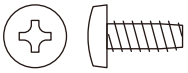
Taptite bind B M4x12	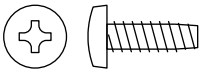

Taptite cup B

Taptite cup B M3x10	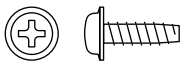
Taptite cup B M3x12	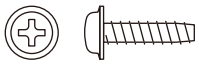

Taptite cup S

Taptite cup S M3x6 SR	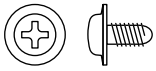
Taptite cup S M3x8 SR	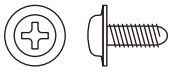
Taptite cup S M3x10 SR	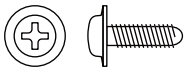

Taptite B

Taptite B M3x6	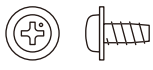

Taptite flat B

Taptite flat B M3x10	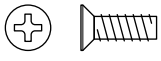

Taptite pan

Taptite pan B M4x14	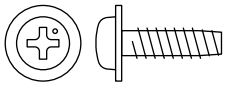

Screw pan (S/P washer)

Screw pan (S/P washer) M3.5x6	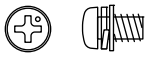

Taptite pan (washer)

Taptite pan (washer) B M4x12 DA	

Taptite pan (S/P washer)

Taptite pan (S/P washer) B M3x10	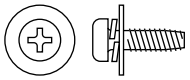

Screw bind

Screw bind M3x6	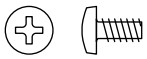
Screw bind M3x8	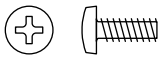

Confidential

4. SCREW TORQUE LIST

Note:
For verifying the shape of each screw, refer to "3. SCREW CATALOGUE" in this chapter.

Location of screw	Screw type	Q' ty	Tightening torque N·m (kgf·cm)
Fuser cover L	Taptite bind B M4x12	2	0.8±0.1 (8±1)
Fuser cover R	Taptite bind B M4x12	2	0.8±0.1 (8±1)
Fuser unit	Taptite pan B M4x14	2	0.8±0.1 (8±1)
Side cover L ASSY	Taptite B 3x6	1	0.45±0.05 (4.5±0.5)
	Taptite bind B M4x12	4	0.8±0.1 (8±1)
Side cover R	Taptite B 3x6	1	0.45±0.05 (4.5±0.5)
	Taptite bind B M4x12	3	0.8±0.1 (8±1)
Duplex tray	Taptite cup B M3x12	2	0.5±0.1 (5±1)
Front cover damper spring	Taptite B 3x6	1	0.3±0.05 (3±0.5)
Main shield cover plate ASSY	Screw bind M3x8 (Upper side)	2	0.5±0.05 (5±0.5)
	Screw bind M3x8 (Lower side)	2	0.8±0.1 (8±1)
Top cover ASSY	Taptite cup S M3x8 SR	1	0.4±0.05 (4±0.5)
	Taptite bind B M4x12	2	0.8±0.1 (8±1)
FG wire	Taptite cup B M3x10	1	0.5±0.05 (5±0.5)
Panel cover case lower	Taptite bind B M4x12	2	0.9±0.1 (9±1)
Panel cover ASSY	Taptite cup B M3x10	1	0.5±0.1 (5±1)
USB host relay PCB ASSY	Taptite bind B M4x12	2	0.7±0.1 (7±1)
Main PCB ASSY	Screw bind M3x6 (Upper side)	1	0.5±0.1 (5±1)
	Screw bind M3x6 (Lower side)	1	0.8±0.1 (8±1)
Scanner cover plate	Taptite bind B M4x12	6	0.8±0.1 (8±1)
	Taptite cup S M3x6 SR	4	0.8±0.1 (8±1)
Scanner holder	Taptite cup S M3x6 SR	5	0.8±0.1 (8±1)
Side ground plate L	Taptite cup S M3x8 SR	2	0.8±0.1 (8±1)
Main PCB plate	Screw bind M3x8	2	0.8±0.1 (8±1)
PF cable rack	Taptite cup S M3x8 SR	1	0.8±0.1 (8±1)
Under bar ground spring	Taptite cup S M3x8 SR	1	0.8±0.1 (8±1)
Process drive unit	Taptite bind B M4x12	5	0.8±0.1 (8±1)
	Taptite pan (washer) B M4x12 DA	1	0.8±0.1 (8±1)
	Screw pan (S/P washer) M3.5x6	1	0.3±0.05 (3±0.5)
Main drive unit	Taptite bind B M4x12	4	0.8±0.1 (8±1)
Develop release drive unit	Taptite bind B M4x12	3	0.8±0.1 (8±1)
Paper eject ASSY	Taptite bind B M4x12	4	0.8±0.1 (8±1)
Registration mark sensor unit	Taptite bind B M3x10	2	0.5±0.1 (5±1)

Confidential

Location of screw	Screw type	Q' ty	Tightening torque N·m (kgf·cm)
FG harness of the Inlet harness ASSY	Screw pan (S/P washer) M3.5x6	1	0.5±0.05 (5±0.5)
Inlet harness ASSY	Taptite flat B M3x10	1	0.5±0.05 (5±0.5)
Drive ground plate	Screw pan (S/P washer) M3.5x6	1	0.5±0.05 (5±0.5)
LVPS plate	Taptite cup S M3x8 SR	2	0.5±0.05 (5±0.5)
	Taptite bind B M4x12	2	0.8±0.1 (8±1)
Low-voltage power supply PCB unit	Taptite cup S M3x6 SR	5	0.5±0.05 (5±0.5)
MP upper cover ASSY	Taptite bind B M3x10	2	0.4±0.1 (4±1)
MP paper empty/ registration front sensor PCB ASSY	Taptite bind B M3x8	1	0.4±0.1 (4±1)
Paper feed unit	Taptite cup B M3x12	1	0.4±0.1 (4±1)
	Taptite bind B M4x12	2	0.8±0.1 (8±1)
Registration front/ rear sensor PCB holder	Taptite bind B M3x10	1	0.5±0.1 (5±1)
MP drive frame	Taptite bind B M3x10	3	0.5±0.1 (5±1)
High-voltage power supply PCB ASSY	Taptite pan B M3x10	2	0.5±0.1 (5±1)
T2 cover rear	Taptite cup S M3x10 SR	2	0.8±0.1 (8±1)
T2 cover left	Taptite cup S M3x6 SR	2	0.8±0.1 (8±1)
T2 cover right	Taptite cup S M3x6 SR	2	0.8±0.1 (8±1)
T2 relay PCB ASSY	Taptite cup S M3x6 SR	1	0.8±0.1 (8±1)
T2 beam F ASSY	Taptite cup S M3x6 SR	5	0.8±0.1 (8±1)
T2 solenoid holder ASSY	Taptite cup S M3x6 SR	1	0.8±0.1 (8±1)
T2 beam front	Taptite cup S M3x6 SR	2	0.8±0.1 (8±1)
T2 beam rear	Taptite cup S M3x6 SR	4	0.8±0.1 (8±1)
T2 frame L unit	Taptite bind B M4x10	1	0.8±0.1 (8±1)

Confidential

5. LUBRICATION

The kind of the lubricating oil (Maker name)	Lubrication point	Quantity of lubrication
FLOIL BG-10KS (Kanto Kasei)	Top cover ASSY	1.0 to 1.5 mm dia. ball (BG1.0 to 1.5)

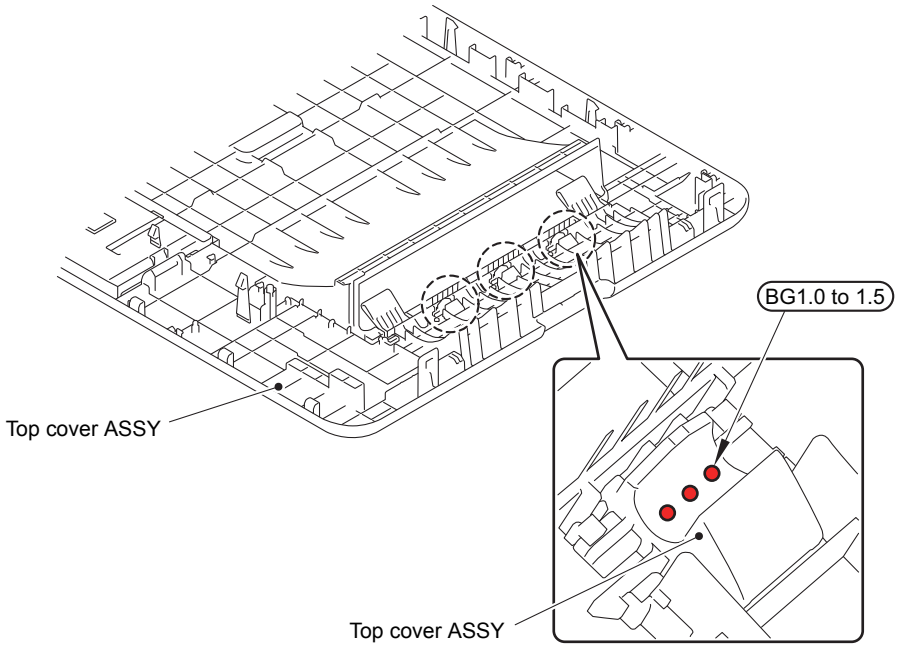

BG1.0 to 1.5: FLOIL BG-10KS (1.0 to 1.5 mm dia. ball)

Confidential

6. OVERVIEW OF GEARS

When ordering spare parts, please refer to Parts reference list.

■ Main frame L ASSY

<Layout view>

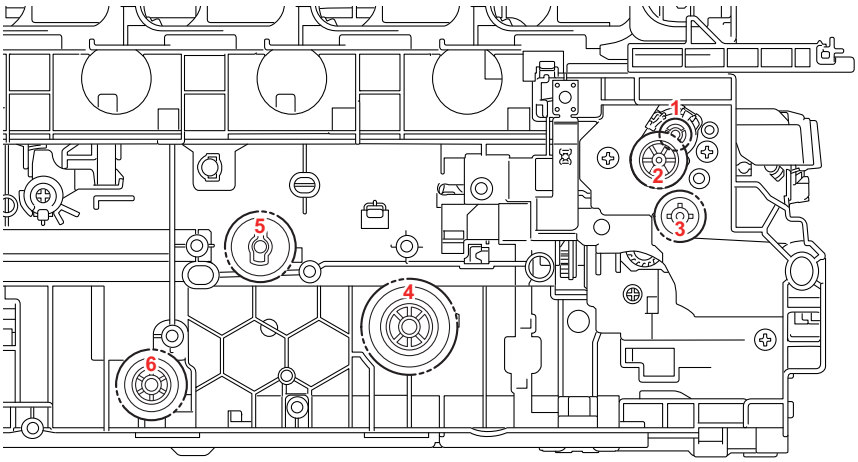

<Development view>

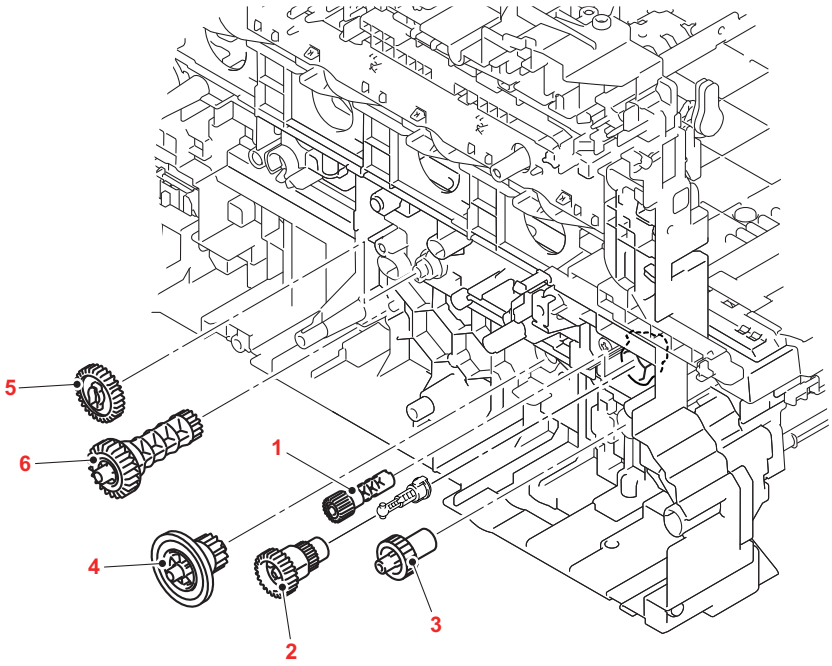

<Name of gears>

1	LY0299	Pinch roller drive gear Z21M05
2	LY1816	Registration gear Z26-23
3	LY0164	PF drive gear 21
4	LY0166	PP gear 14 55
5	LY6128	Cleaner drive gear Z30
6	LY1817	DX drive gear Z15-23

* These parts are subject to change without notice.

Confidential

7. HARNESS ROUTING

1 Top Cover ASSY

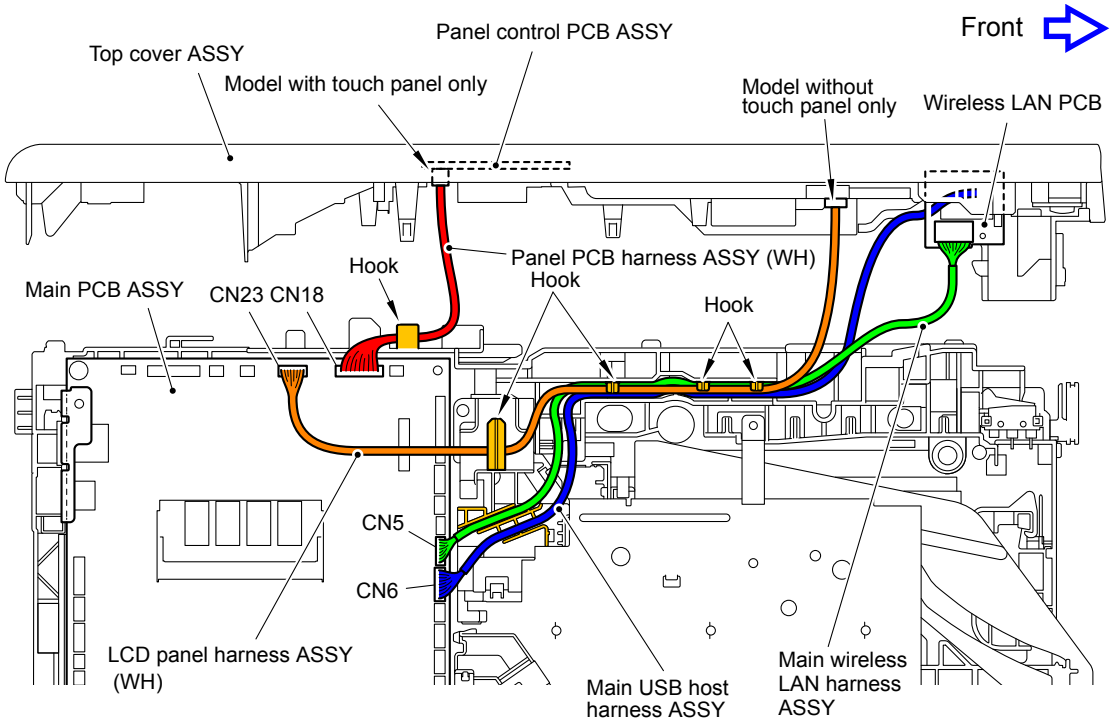

2 Laser Unit

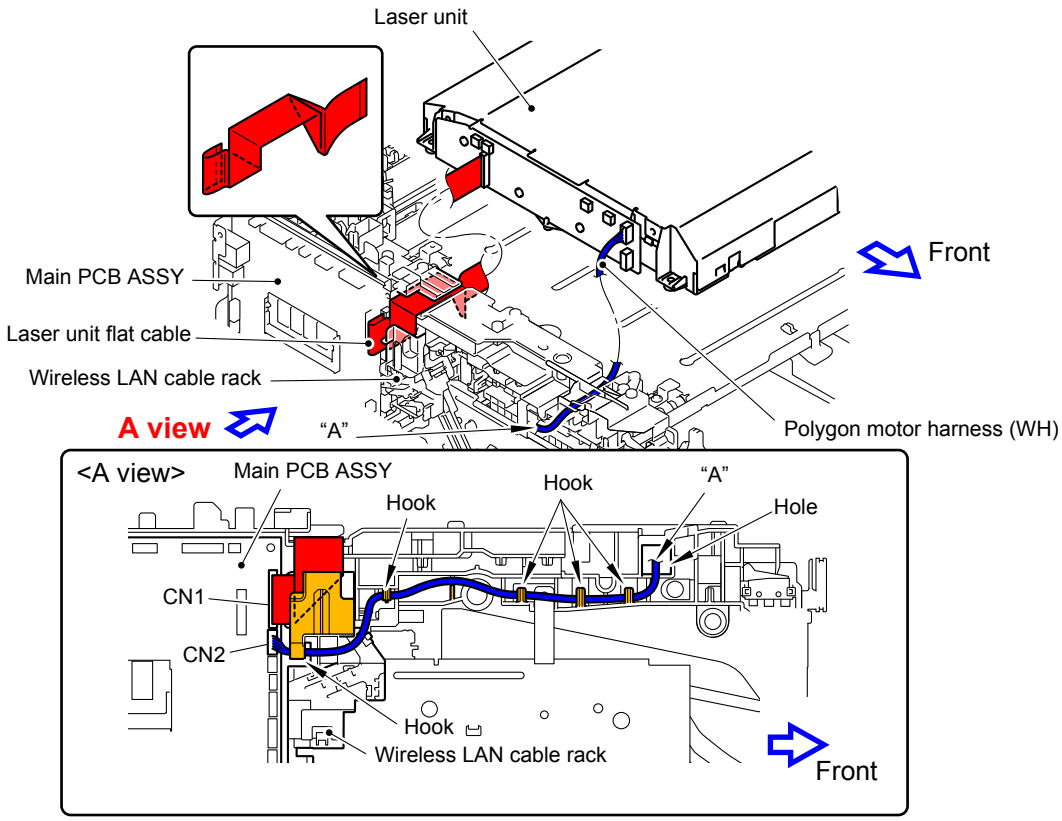

Harness colors may be changed for any reason.

Confidential

3 Process Drive Unit, Front Cover Sensor, Main Drive Unit

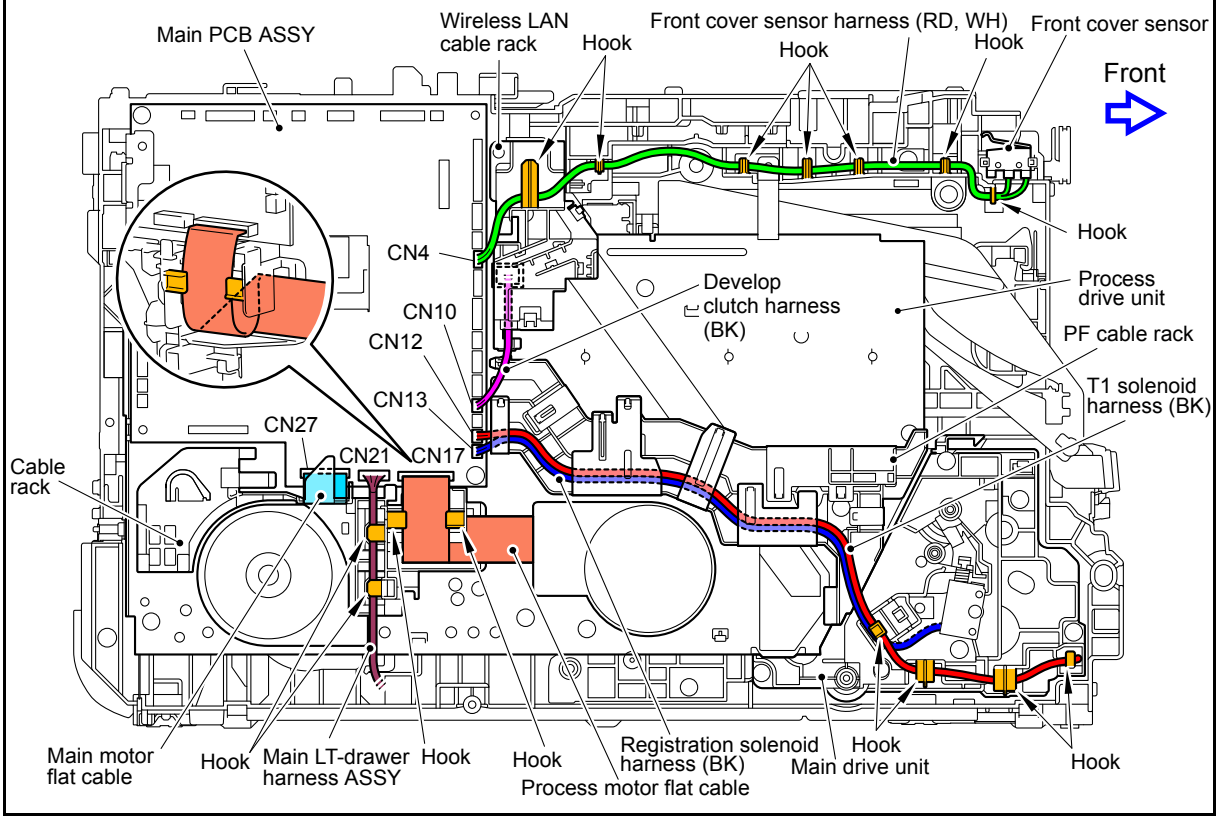

4 Develop Release Drive Unit, Develop Release Sensor PCB ASSY, Toner/New Sensor PCB ASSY

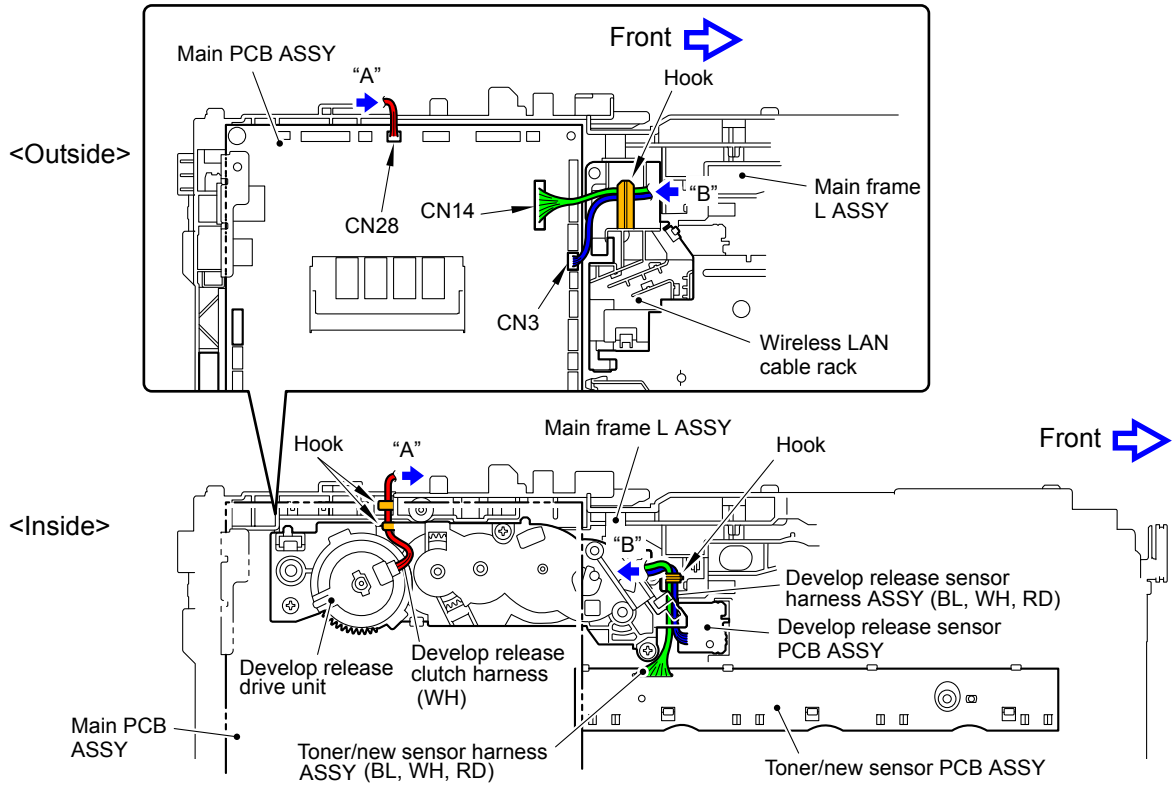

Harness colors may be changed for any reason.

Confidential

5 Paper Eject ASSY

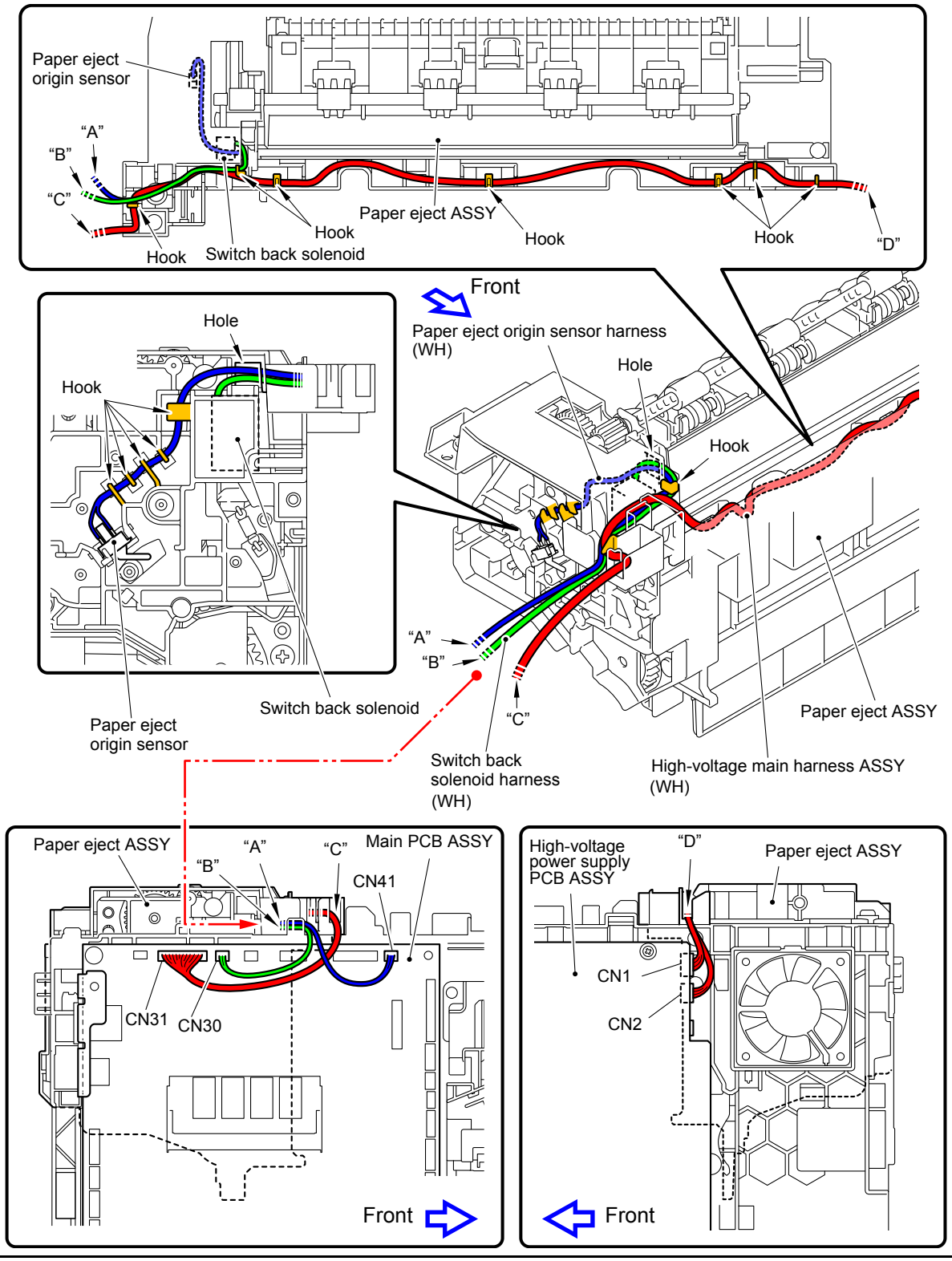

Harness colors may be changed for any reason.

Confidential

6 Back Cover Sensor ASSY

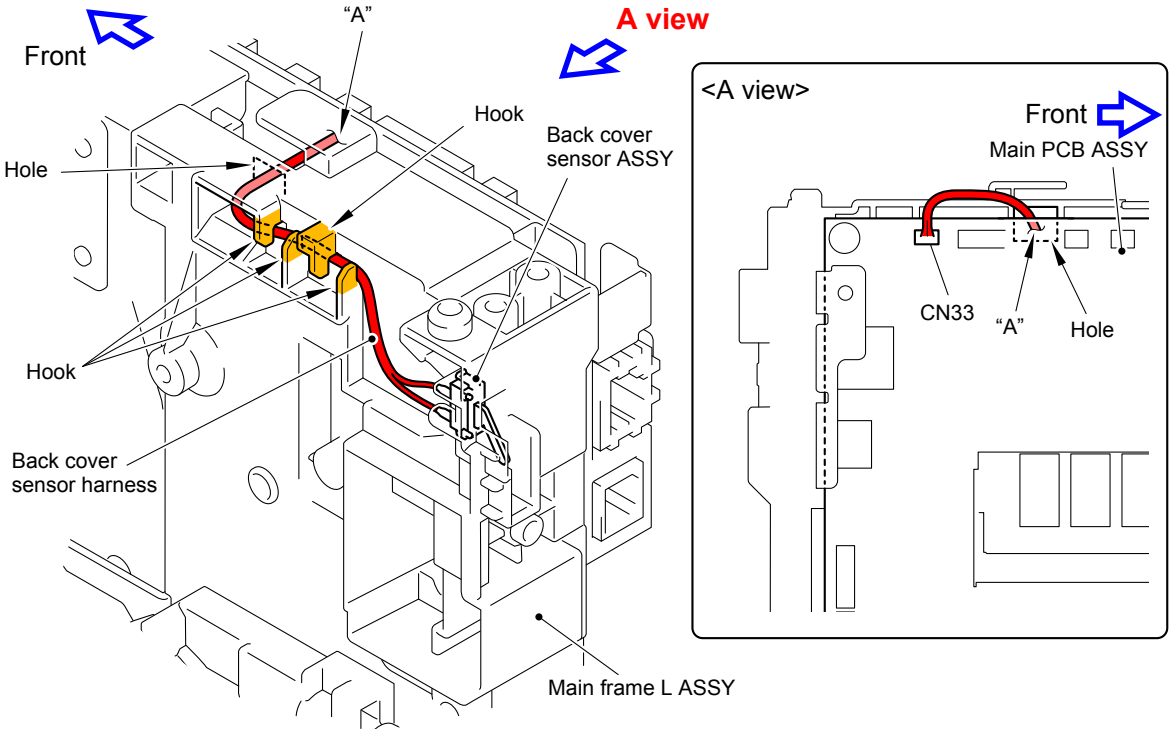

7 Eject Sensor PCB ASSY, Fuser Unit

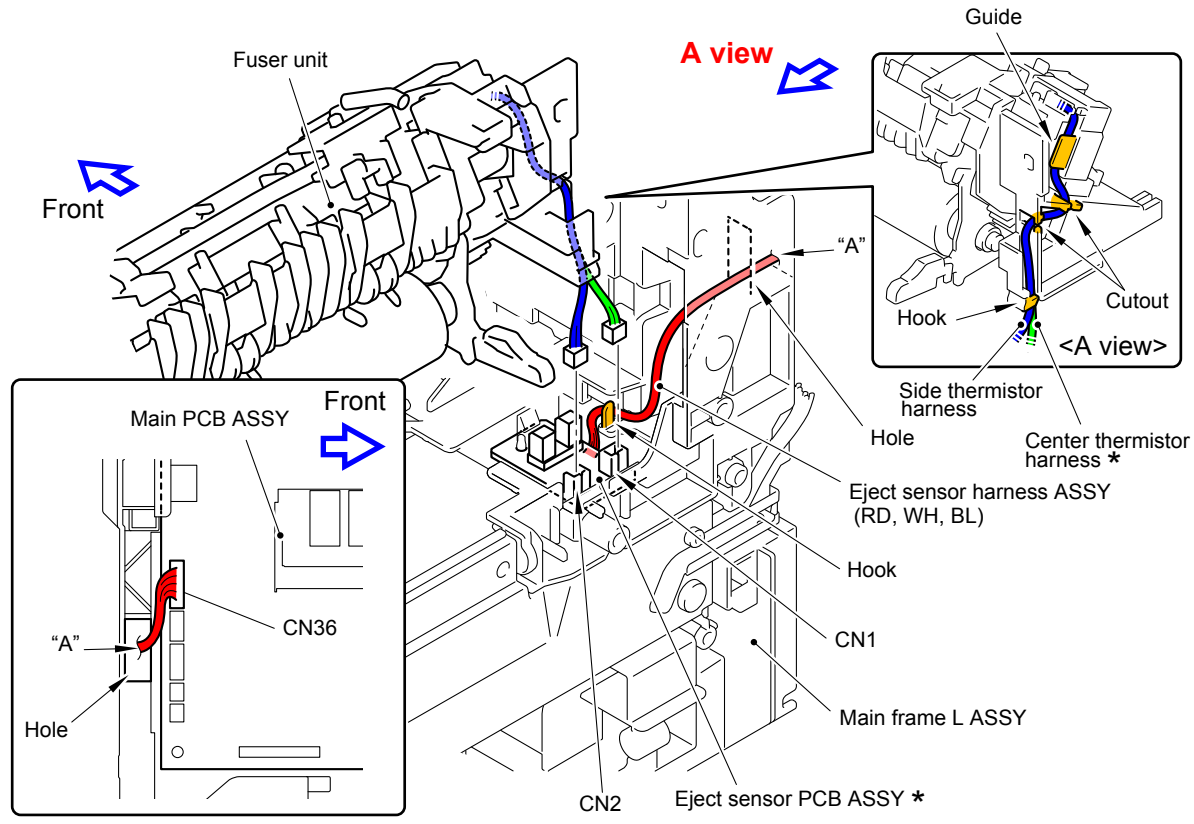

Harness colors may be changed for any reason.

* Center thermistor has a black and blue connectors (230V models only). The black connector may be connected to the blue insertion port and vice versa.

Confidential

8 Registration Mark Sensor Unit

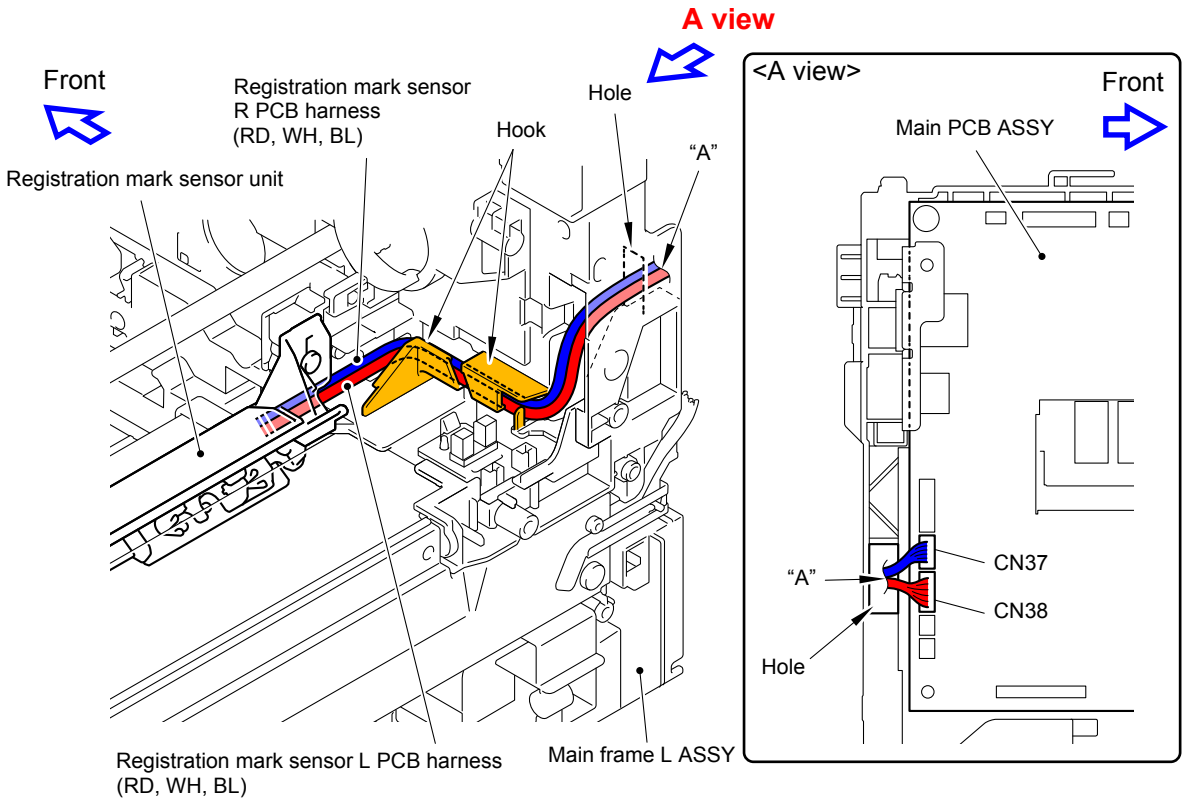

9 Fuser Fan, Power Fan

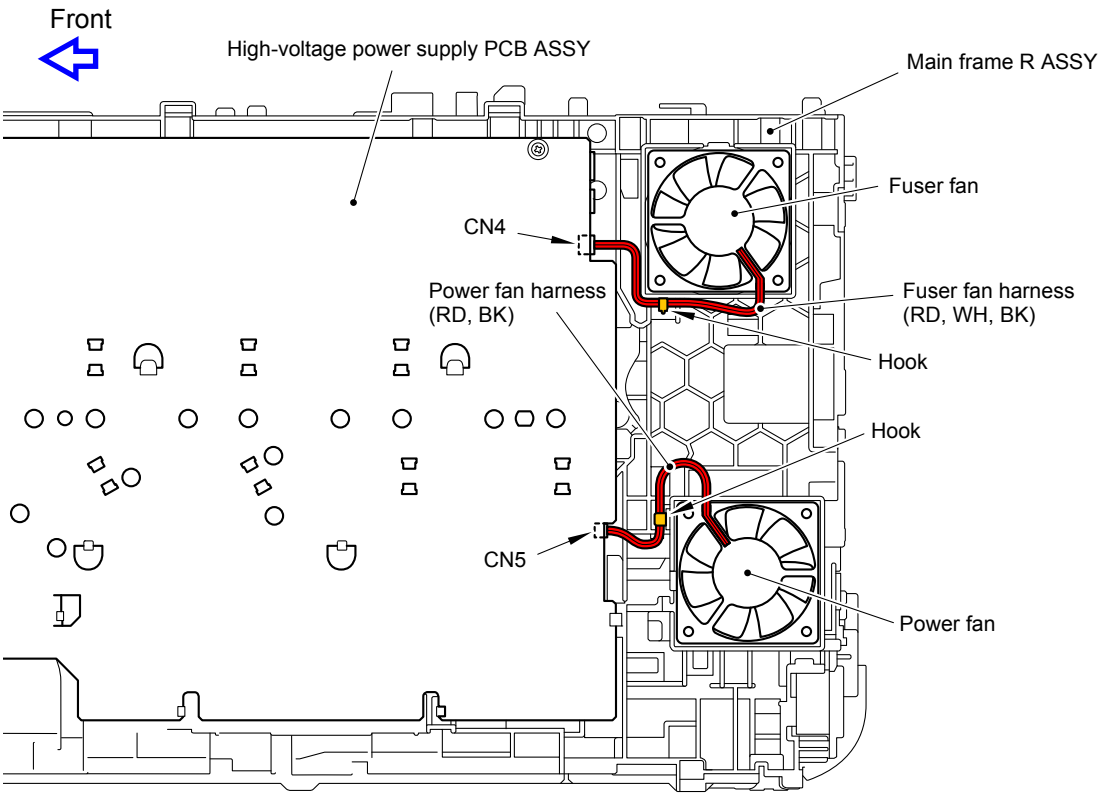

Harness colors may be changed for any reason.

Confidential

10 Low-voltage Power Supply PCB Unit

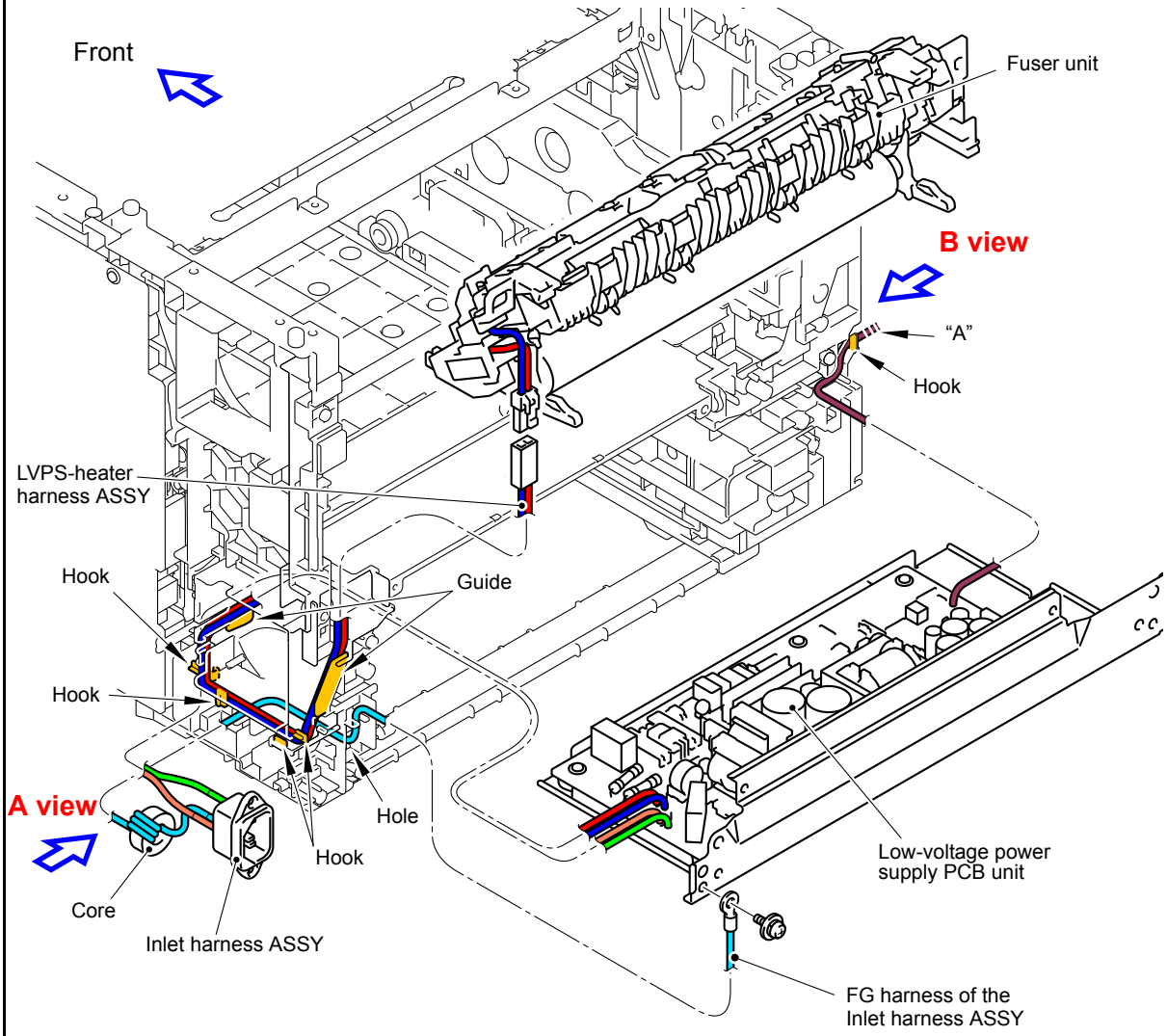

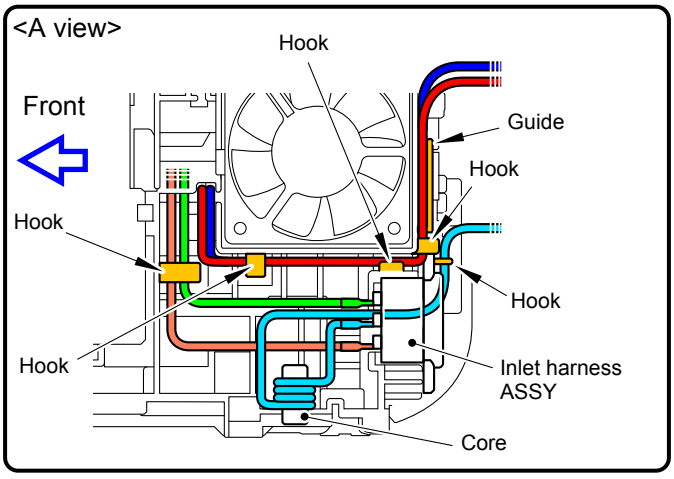

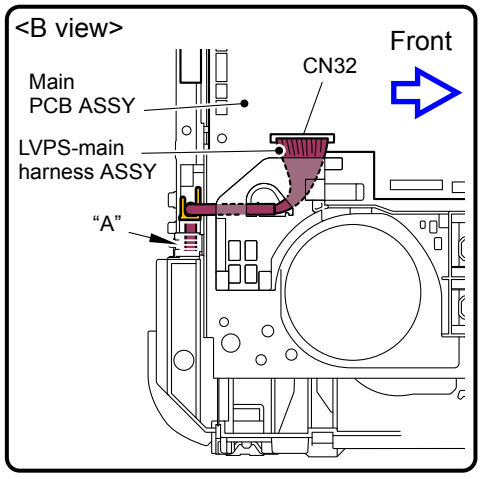

Harness colors may be changed for any reason.

Confidential

11 MP Paper Empty/Registration Front Sensor PCB ASSY

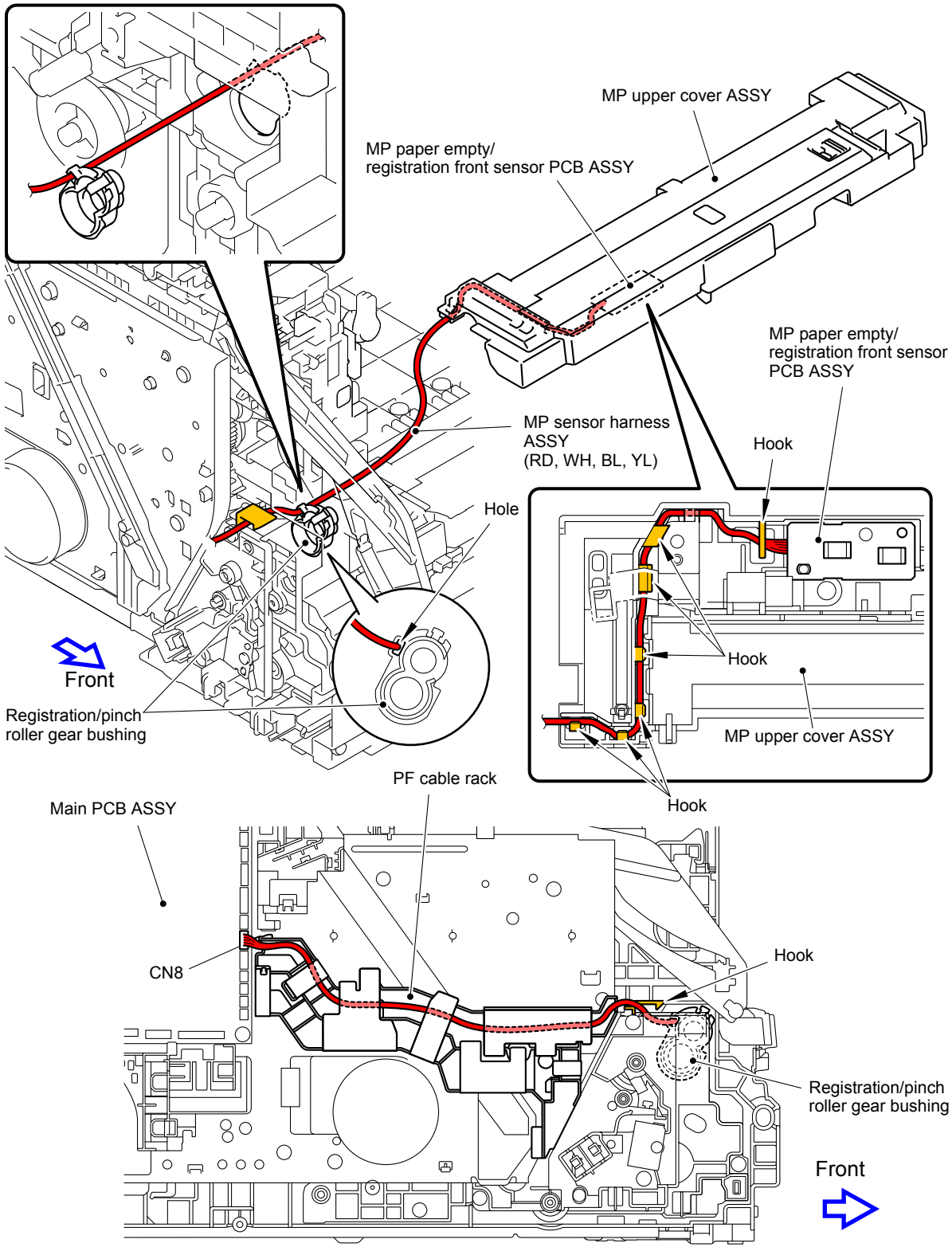

Harness colors may be changed for any reason.

Confidential

12 Paper Feed Unit

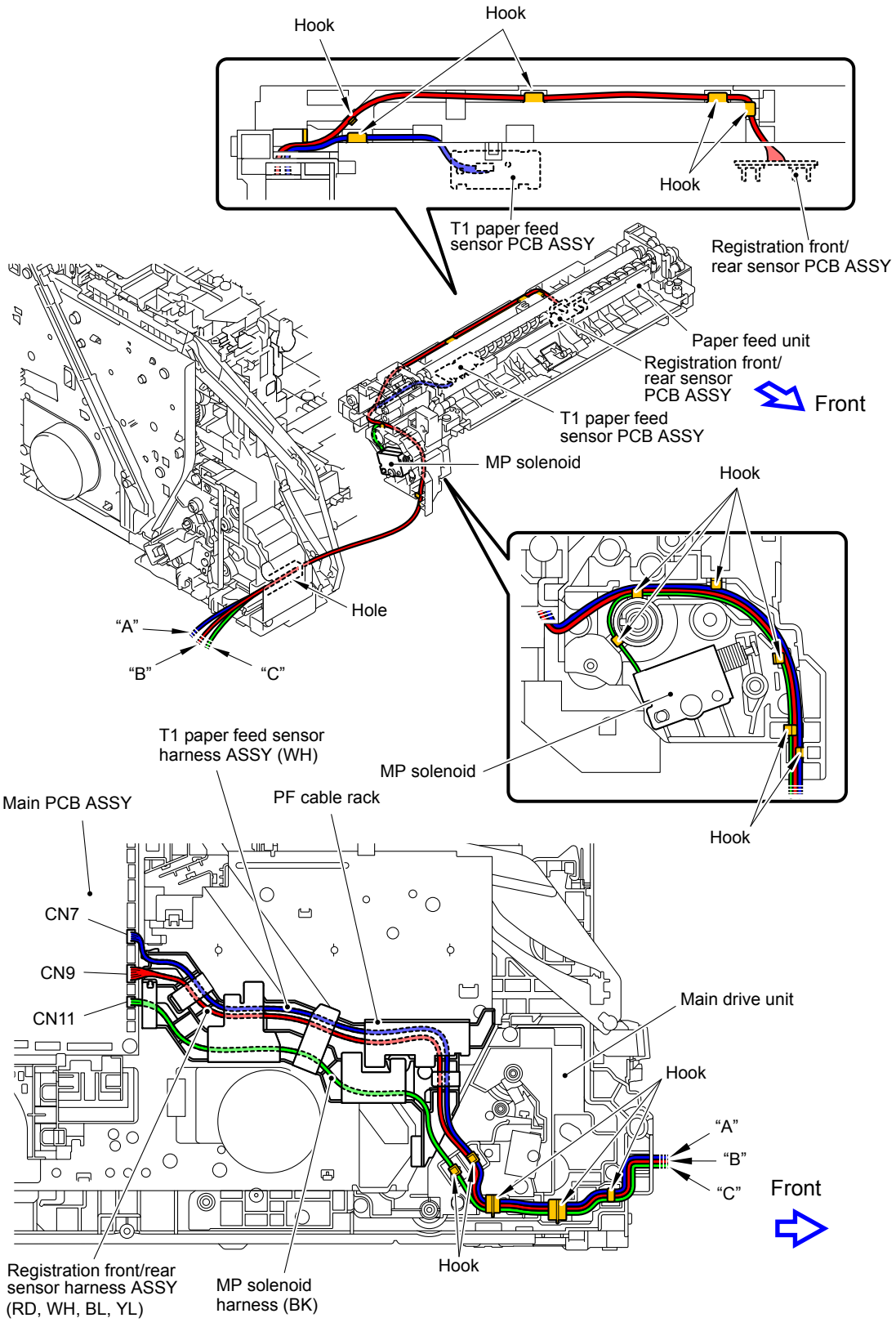

Harness colors may be changed for any reason.

Confidential

13 Blower, Waste Toner Sensor

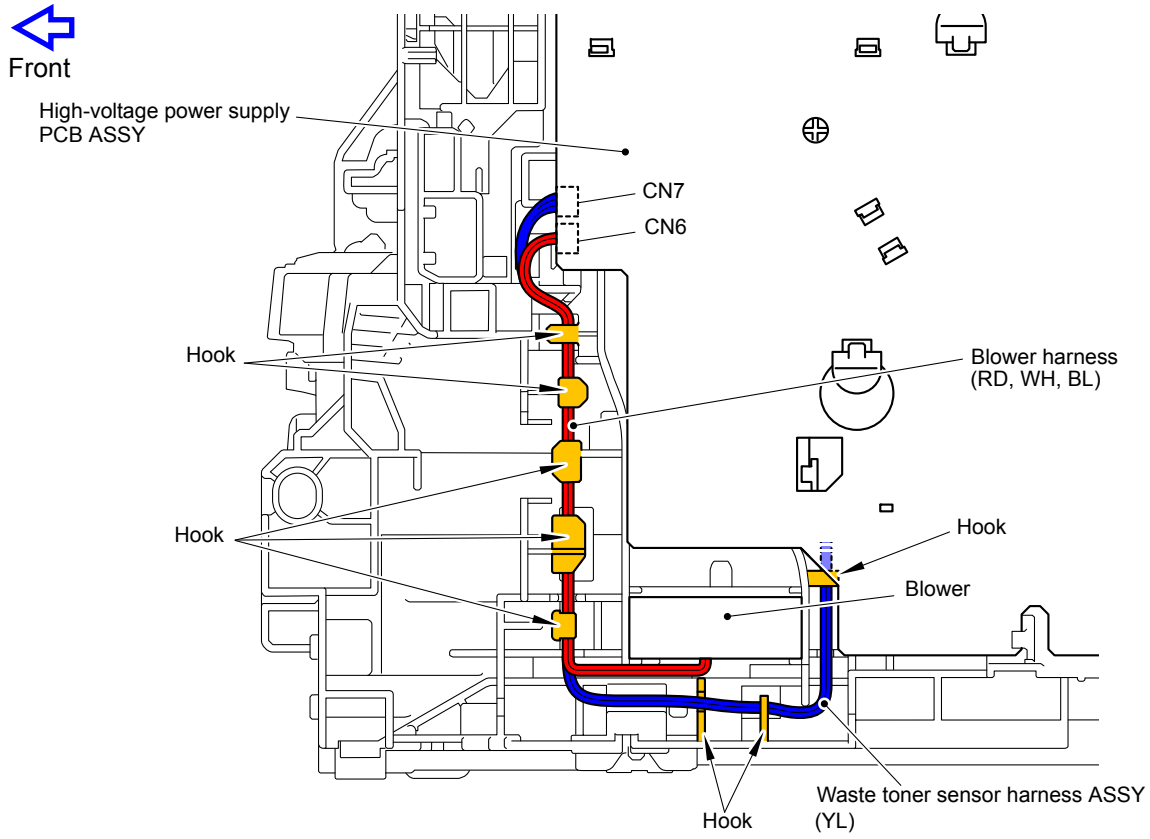

Harness colors may be changed for any reason.

8. DISASSEMBLY FLOW

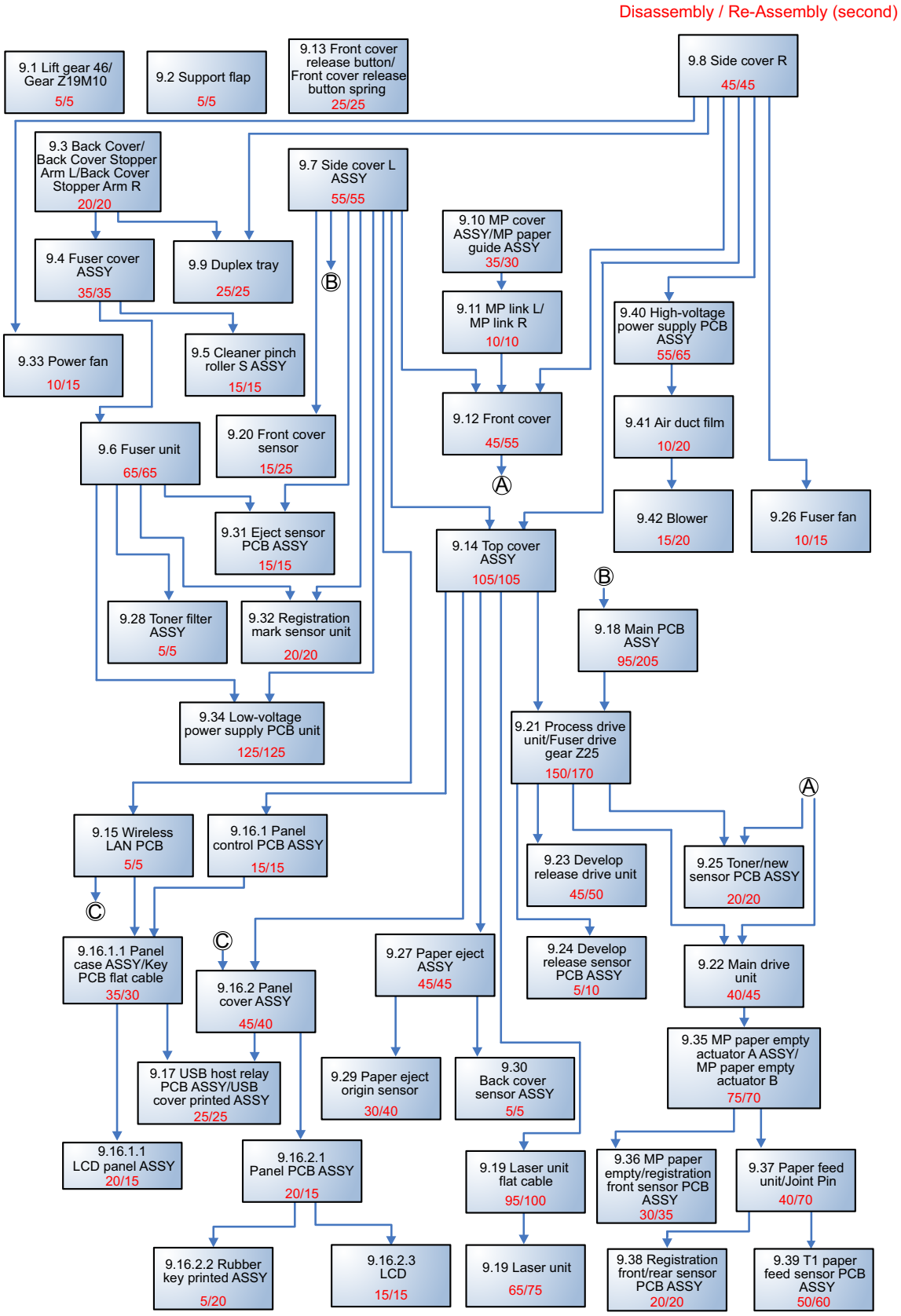

Confidential

9. DISASSEMBLY PROCEDURE

■ Preparation

Prior to proceeding with the disassembly procedure,

(1) Unplug

- the AC cord,
- the USB cable, if connected,
- the LAN cable, if connected, and
- USB flash memory drive, if connected.

(2) Remove

- the Paper tray,
- the Toner cartridge,
- the Drum unit,
- the Belt unit,
- the Waste toner box, and
- LAN port cap.

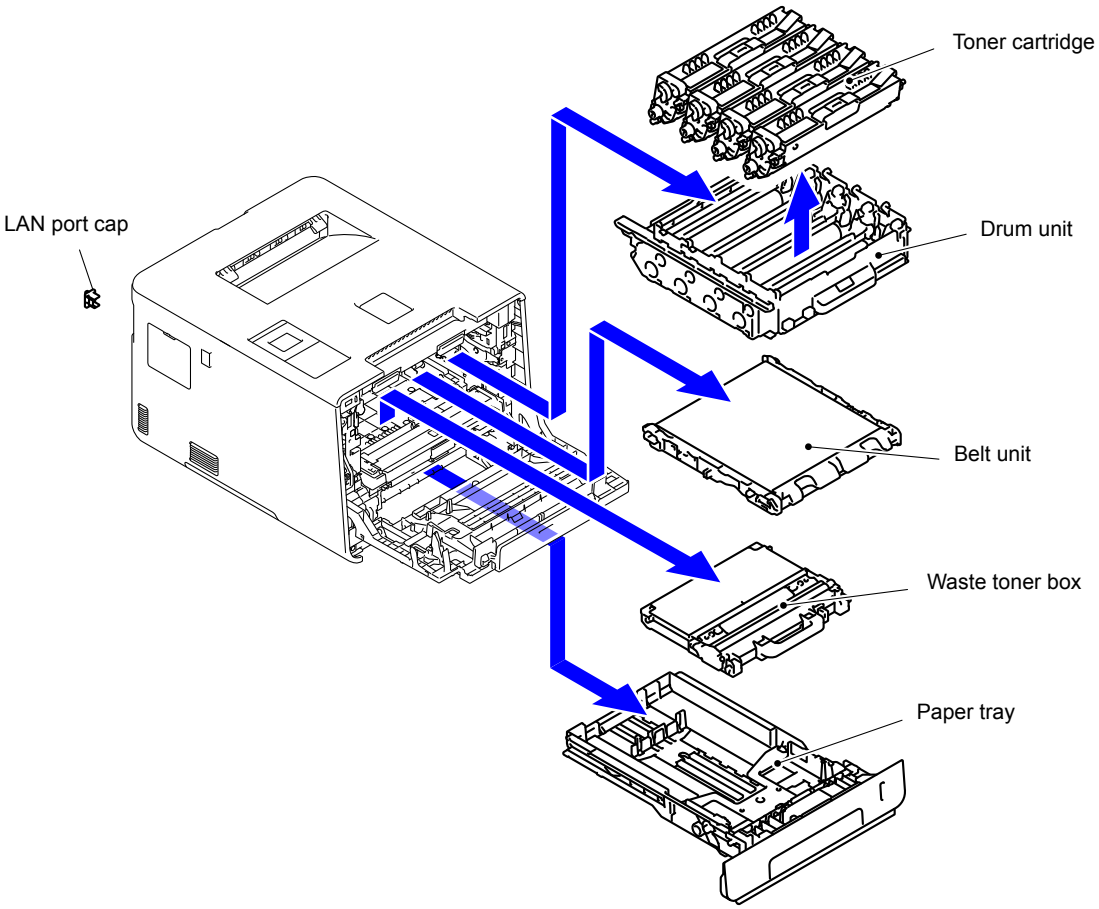

Note: Backup of machine information

Before starting disassembly work, back up the machine information and user setting information. (Refer to "1.3.11 Backup of machine information (Function code 41)" in Chapter 5.) After replacing the PCB, restore the backup data to a new PCB.

9.1 Lift Gear 46/Gear Z19M10

(1) Lift up the Plate. Release the Hook and remove the Lift gear 46 from the Plate up plate.

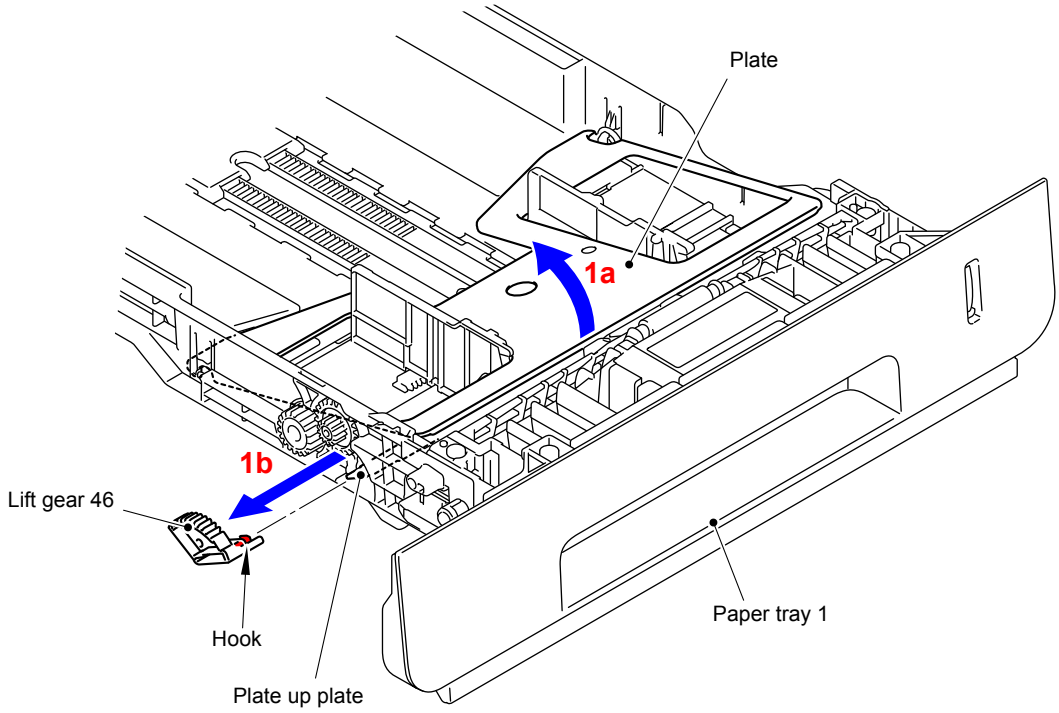

Fig. 3-1

(2) Remove the Gear Z24M10Z14M75 from the Paper tray 1.
(3) Remove the Gear Z19M10 from the Paper tray 1.

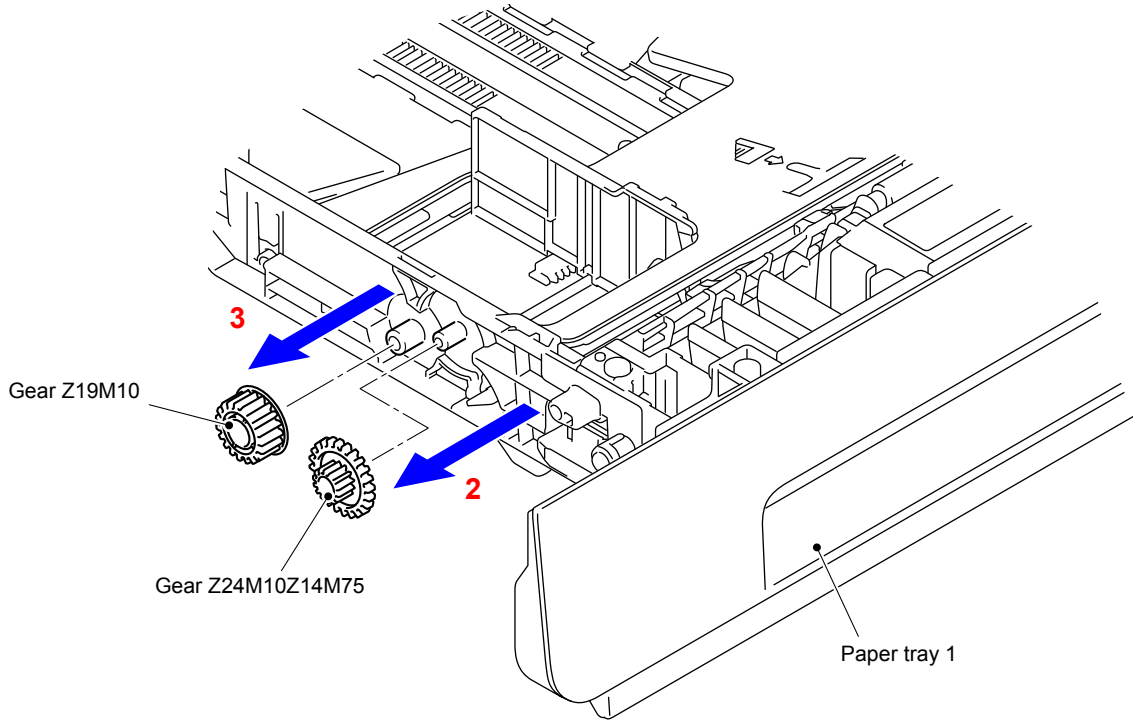

Fig. 3-2

Confidential

9.2 Support Flap

(1) Release the two Pins and remove the Support flap from the Main body.

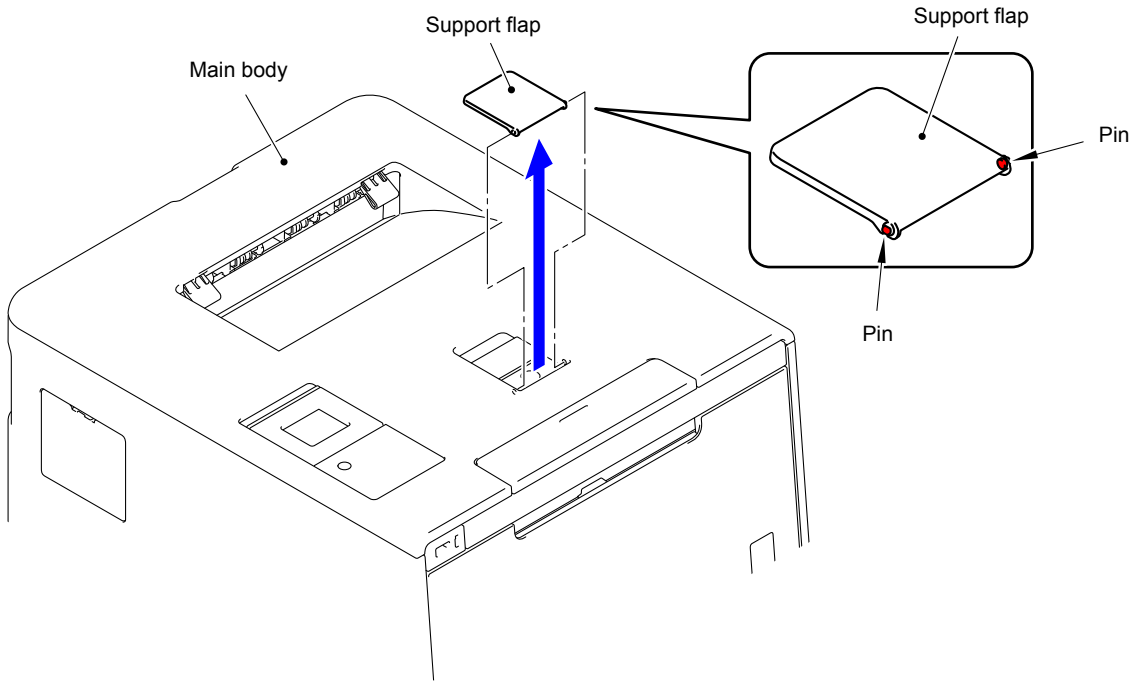

Fig. 3-3

9.3 Back Cover/Back Cover Stopper Arm L/ Back Cover Stopper Arm R

(1) Open the Back cover.

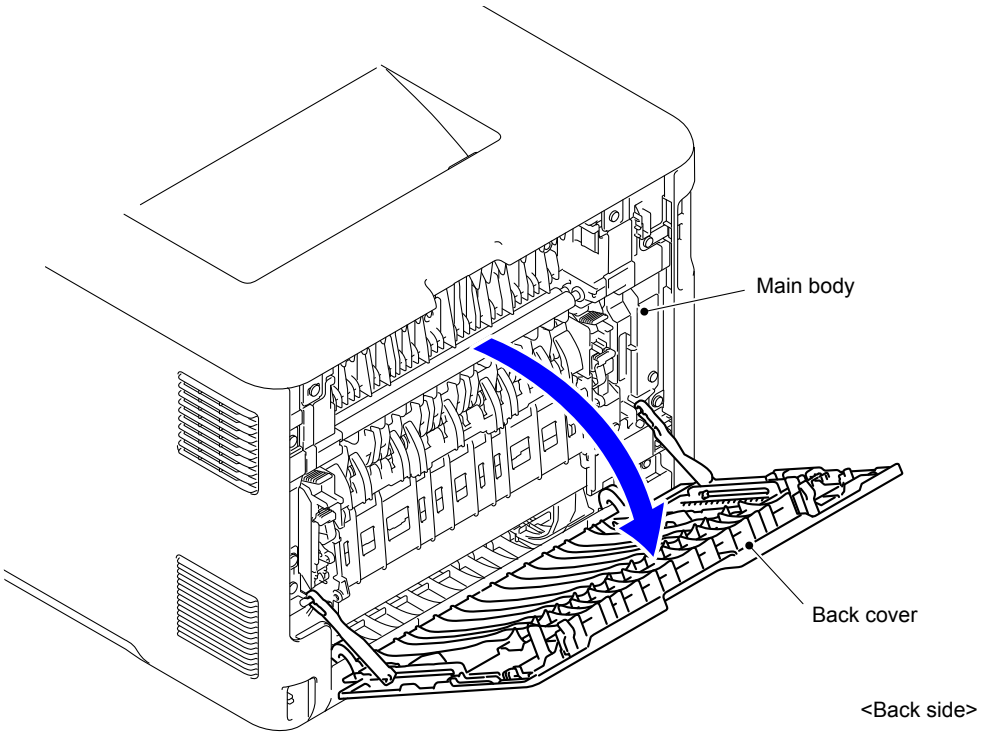

Fig. 3-4

(2) Remove the Back cover stopper arm L/R from the Main body.

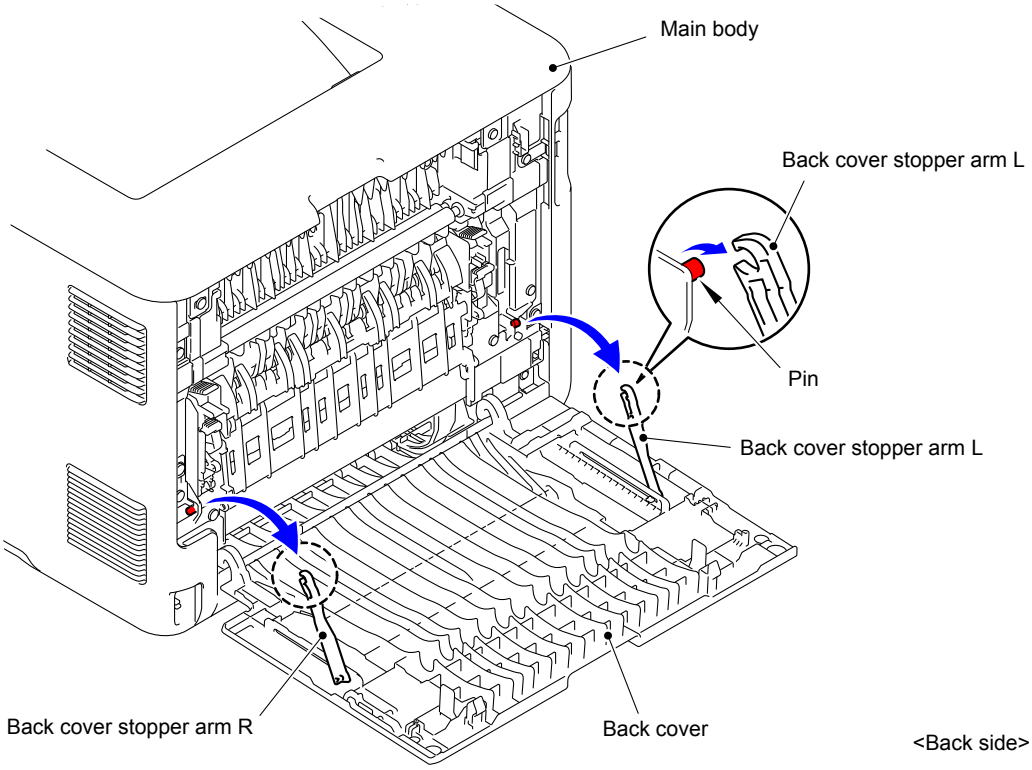

Fig. 3-5

Confidential

(3) Remove the Shaft of the Back cover from the Bush on the right side of the Main body.

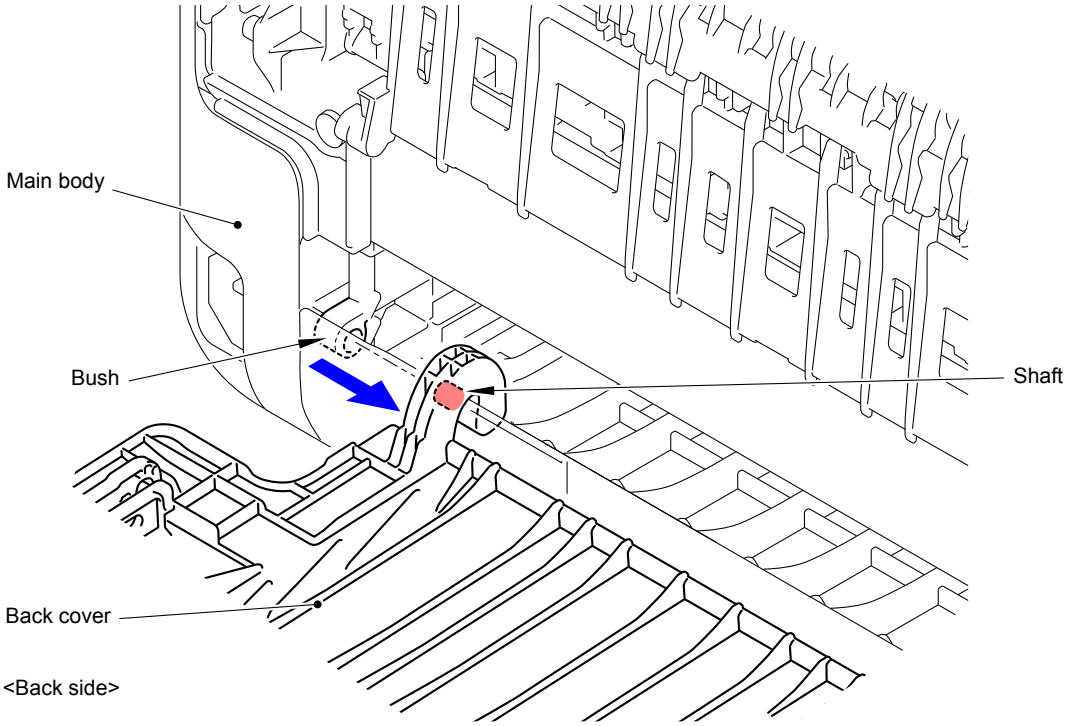

Fig. 3-6

(4) Remove the Back cover.

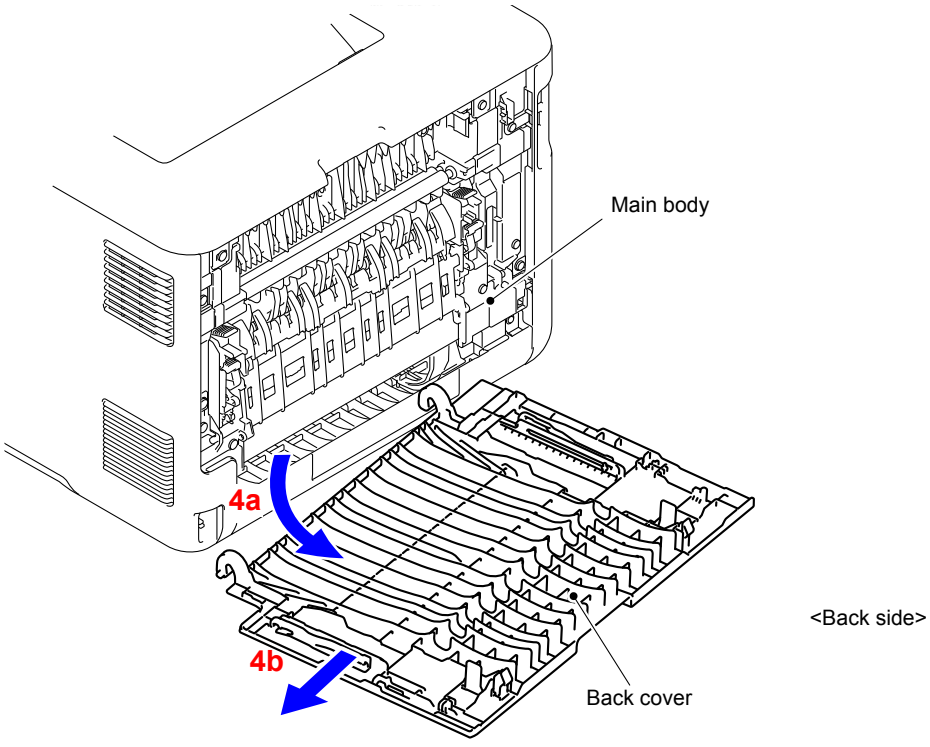

Fig. 3-7

(5) Remove the Back cover stopper arm L from the Back cover.

(6) Remove the Back cover stopper arm R from the Back cover.

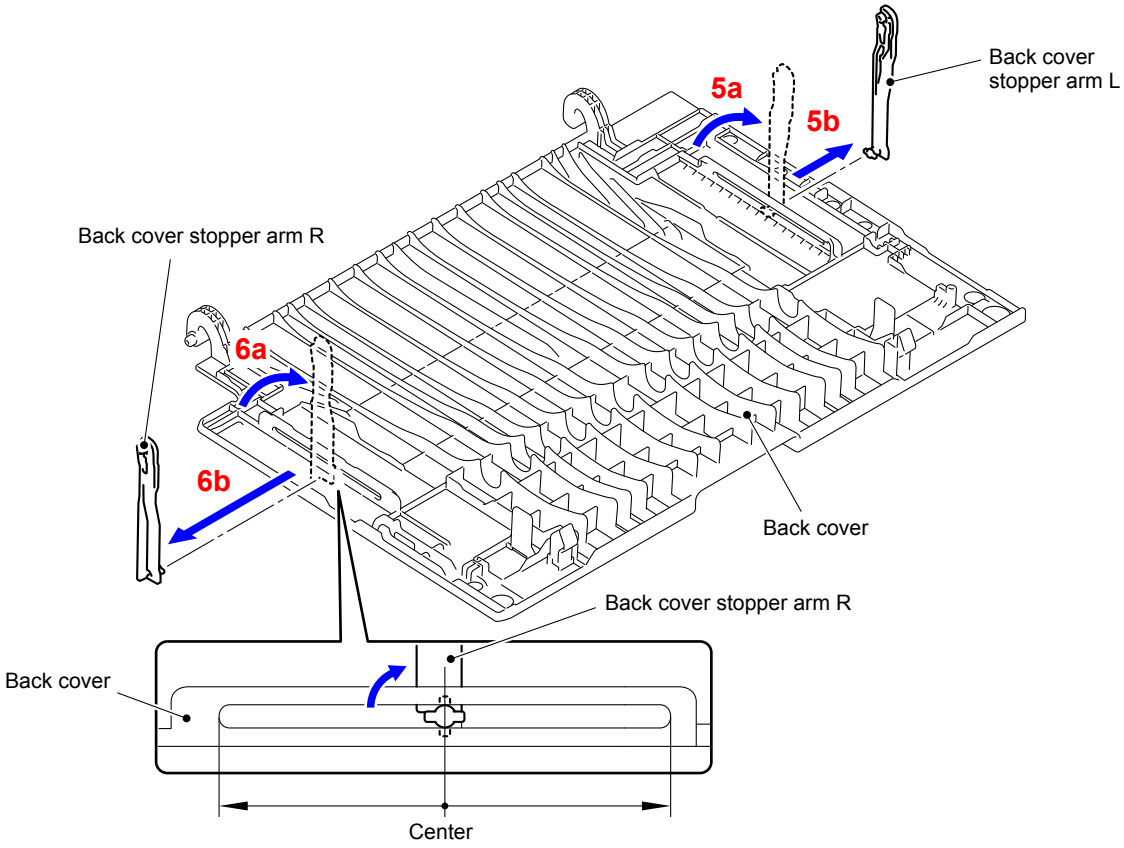

Fig. 3-8

Confidential

9.4 Fuser Cover ASSY

(1) Open the Back flapper holder.
Release the two Pins and remove the Back flapper holder from the Main body.

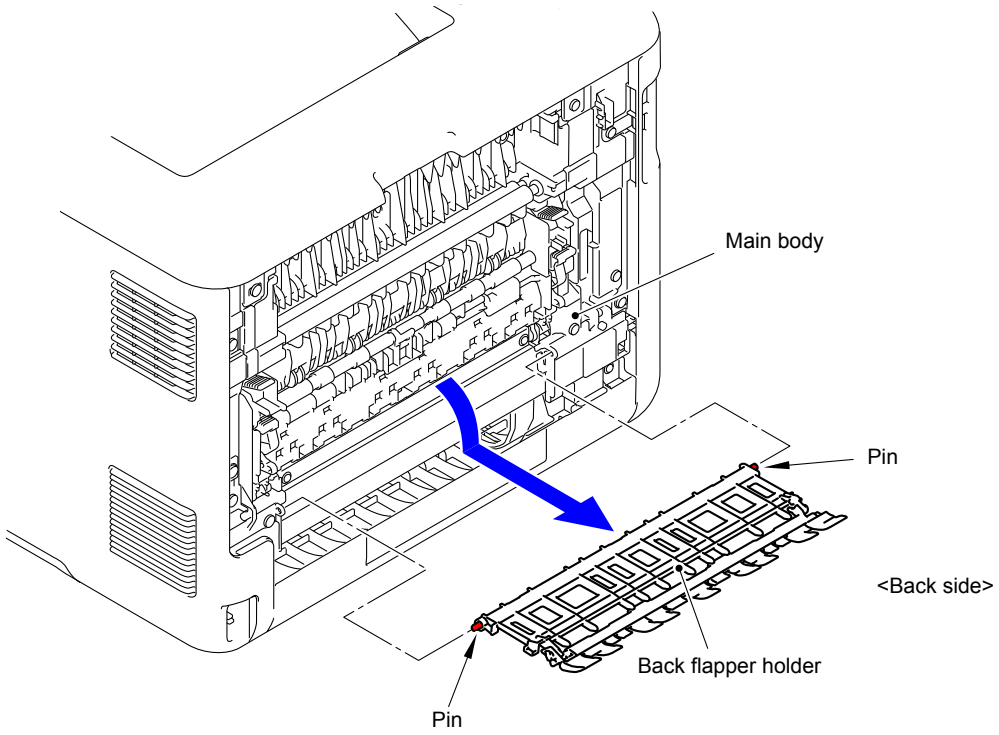

Fig. 3-9

(2) Remove the two Taptite bind B M4x12 screws from the Fuser cover L.
(3) Release the one Hook and one Pin and remove the Fuser cover L from the Main body.

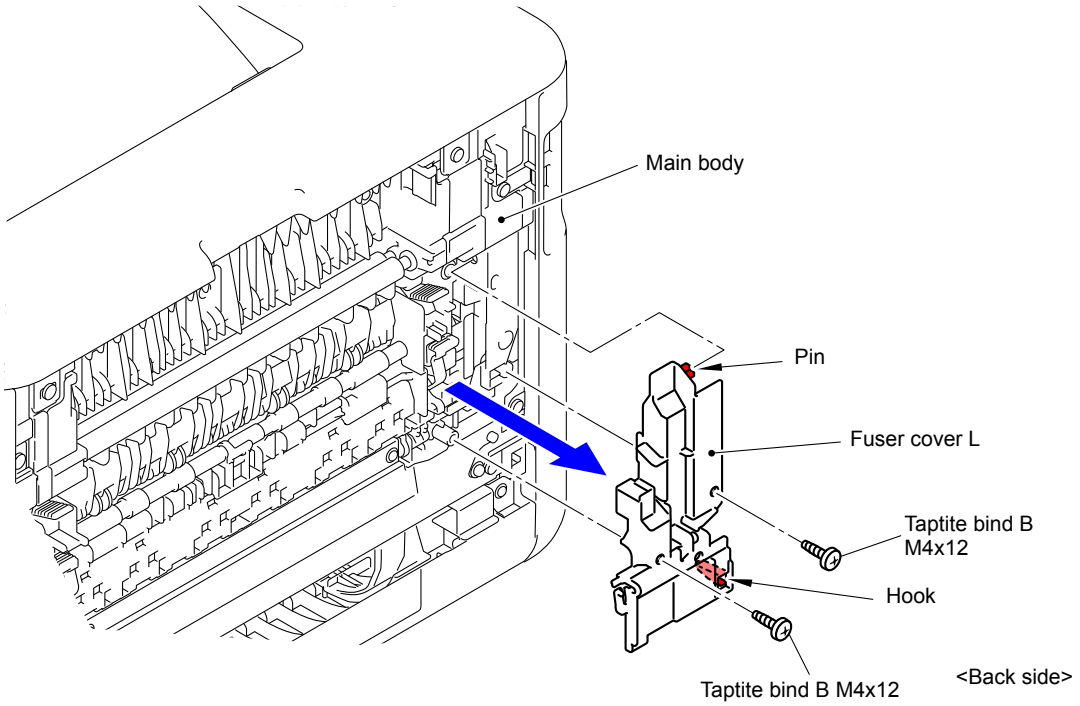

Fig. 3-10

(4) Release the lock of the Fuser cover lock lever L/R to open the Fuser cover ASSY.

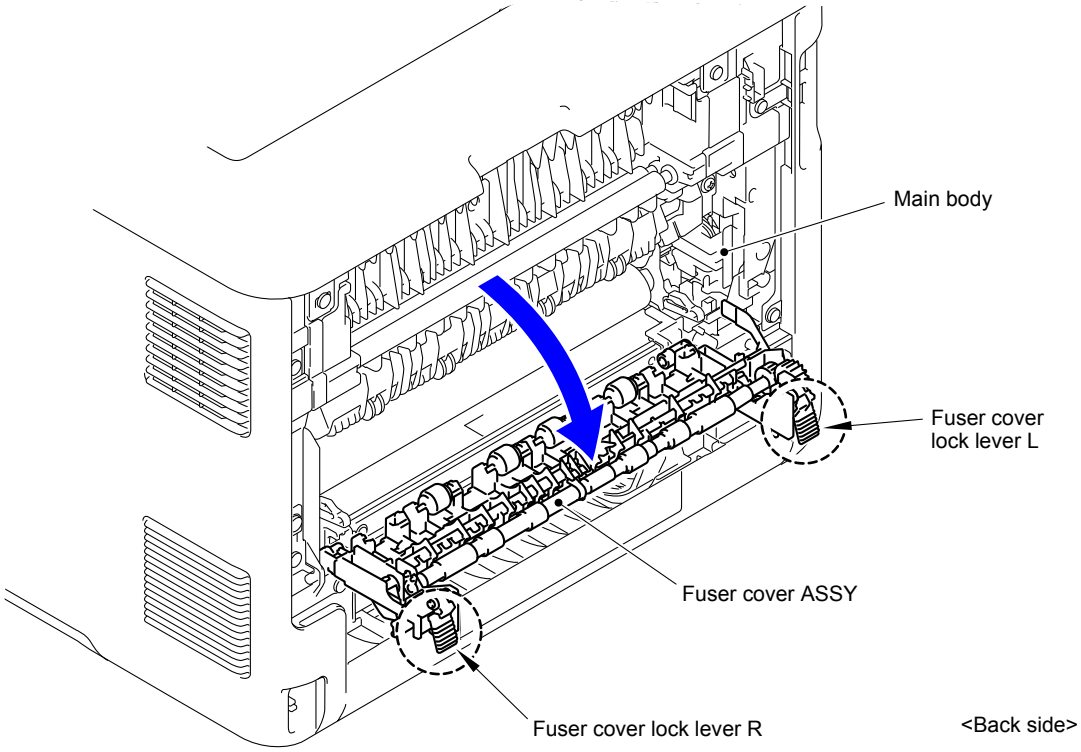

Fig. 3-11

(5) Slide the Fuser cover ASSY in the direction of the arrow 5a and remove it to the front.

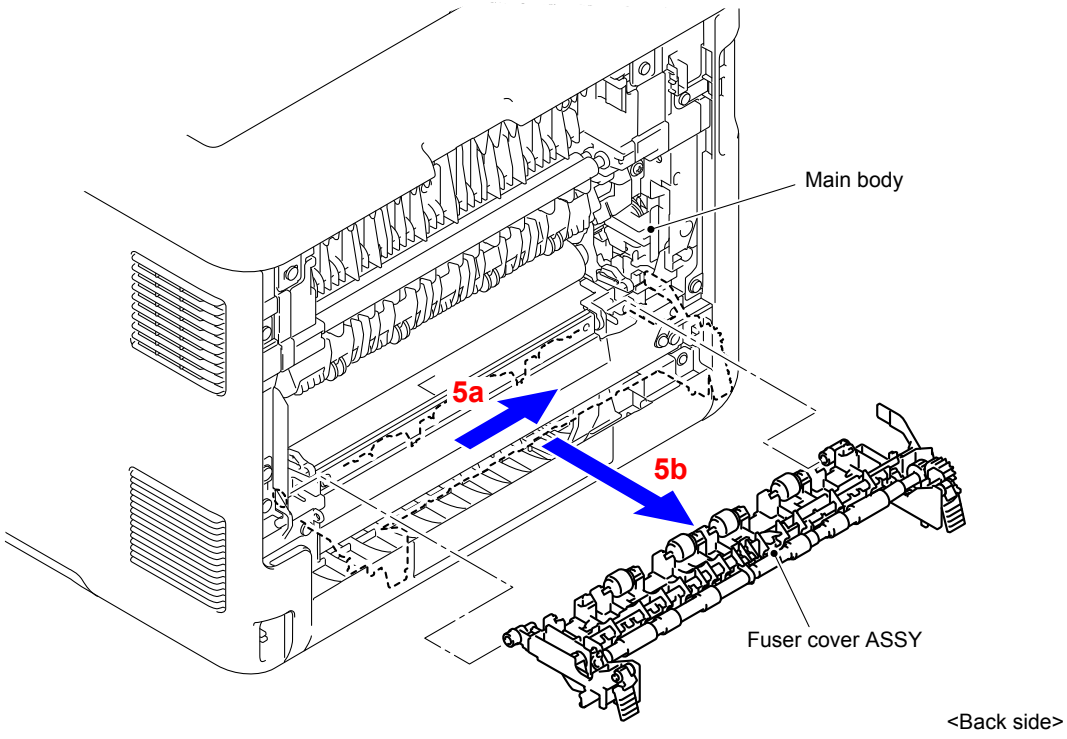

Fig. 3-12

9.5 Cleaner Pinch Roller S ASSY

(1) Remove the Cleaner roller spring from the Hook of the Fuser cover ASSY.

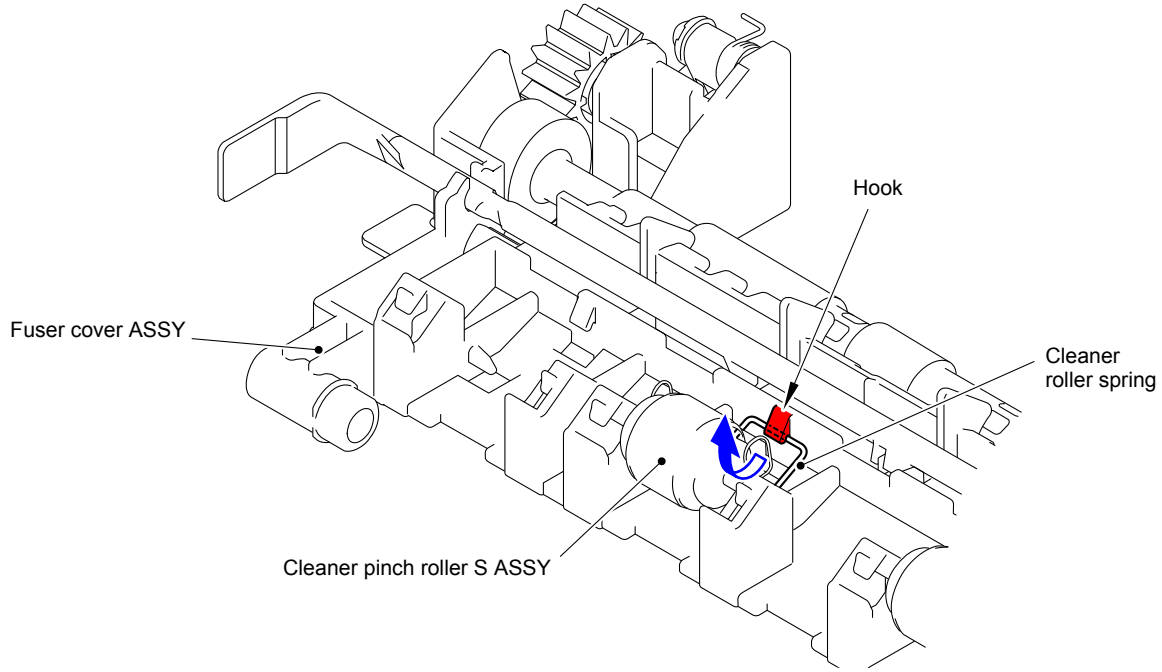

Fig. 3-13

(2) Remove the Cleaner roller spring from the two Pins of the Fuser cover ASSY.
Remove the Cleaner pinch roller S ASSY and Cleaner roller spring from the Fuser cover ASSY.

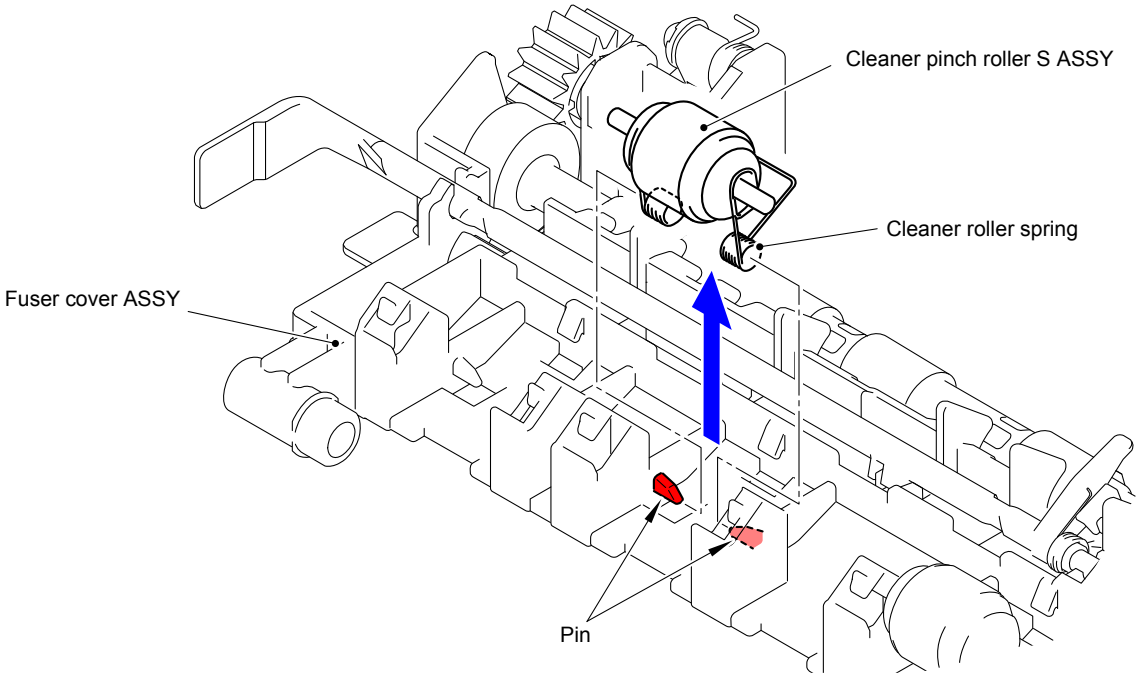

Fig. 3-14

Confidential

(3) Remove the Cleaner pinch roller S ASSY from the Cleaner roller spring.

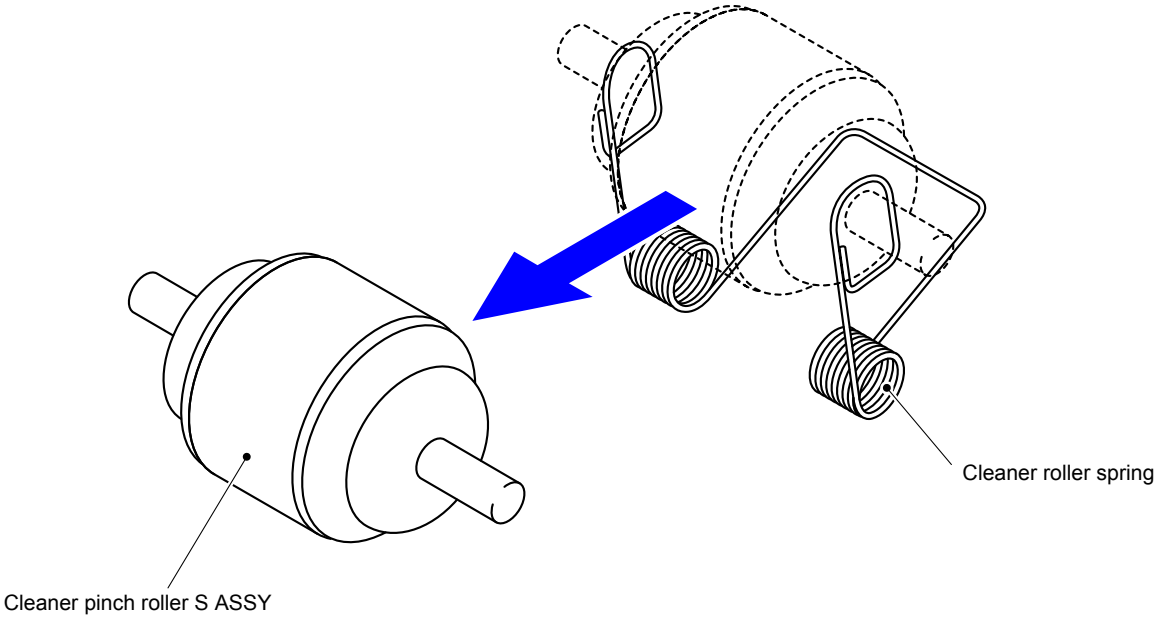

Fig. 3-15

(4) Remove the other three Cleaner pinch roller S ASSYs in the same way.

9.6 Fuser Unit

(1) Remove the two Taptite bind B M4x12 screws from the Fuser cover R.

(2) Release the two Hooks and remove the Fuser cover R from the Main body.

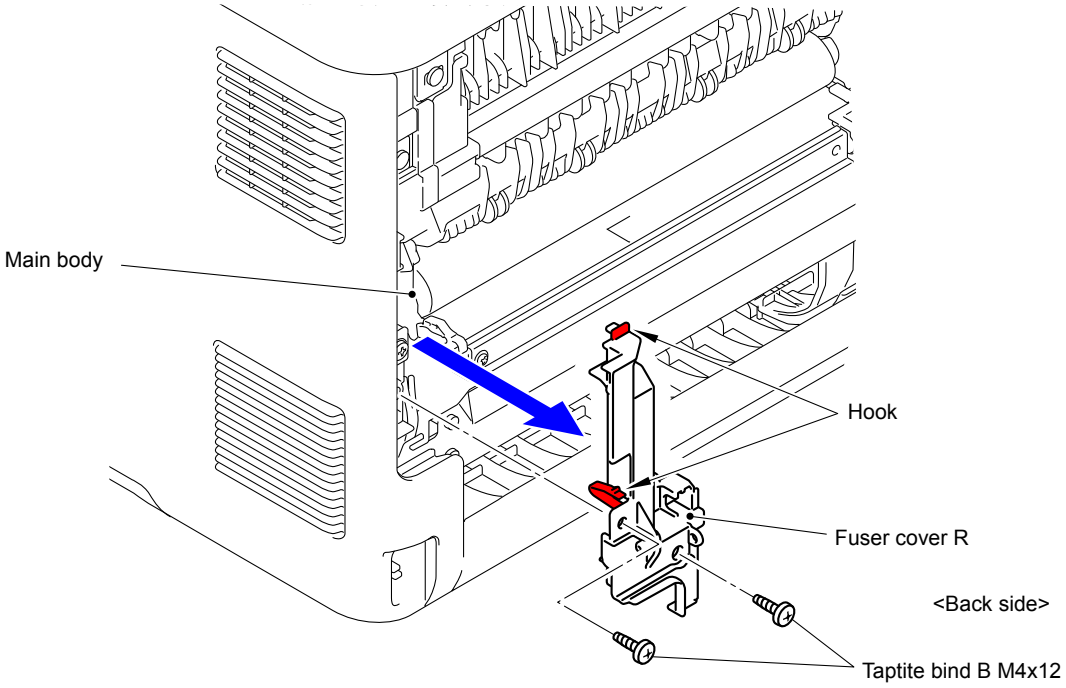

Fig. 3-16

(3) Disconnect the two Connectors (CN1 and CN2) from the Eject sensor PCB ASSY.

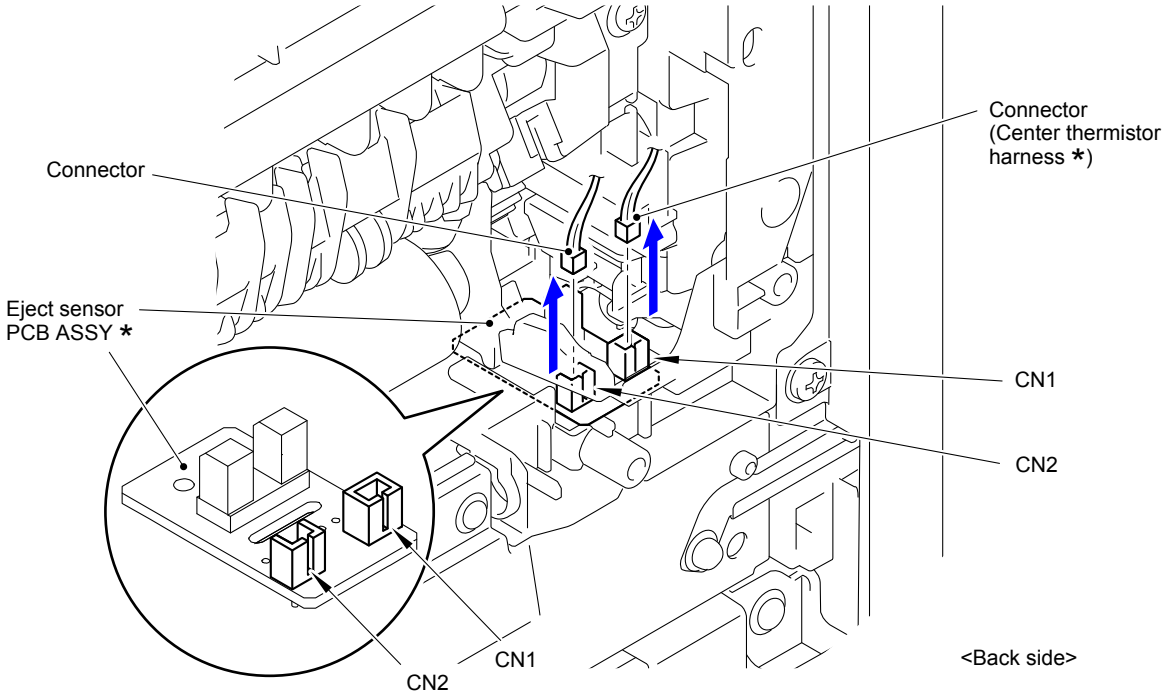

Fig. 3-17

Assembling Note:

* Center thermistor has a black and blue connectors (230V models only).
The black connector may be connected to the blue insertion port and vice versa.

(4) Disconnect the Electrode terminal of the Main body from the Electrode terminal of the Fuser unit.

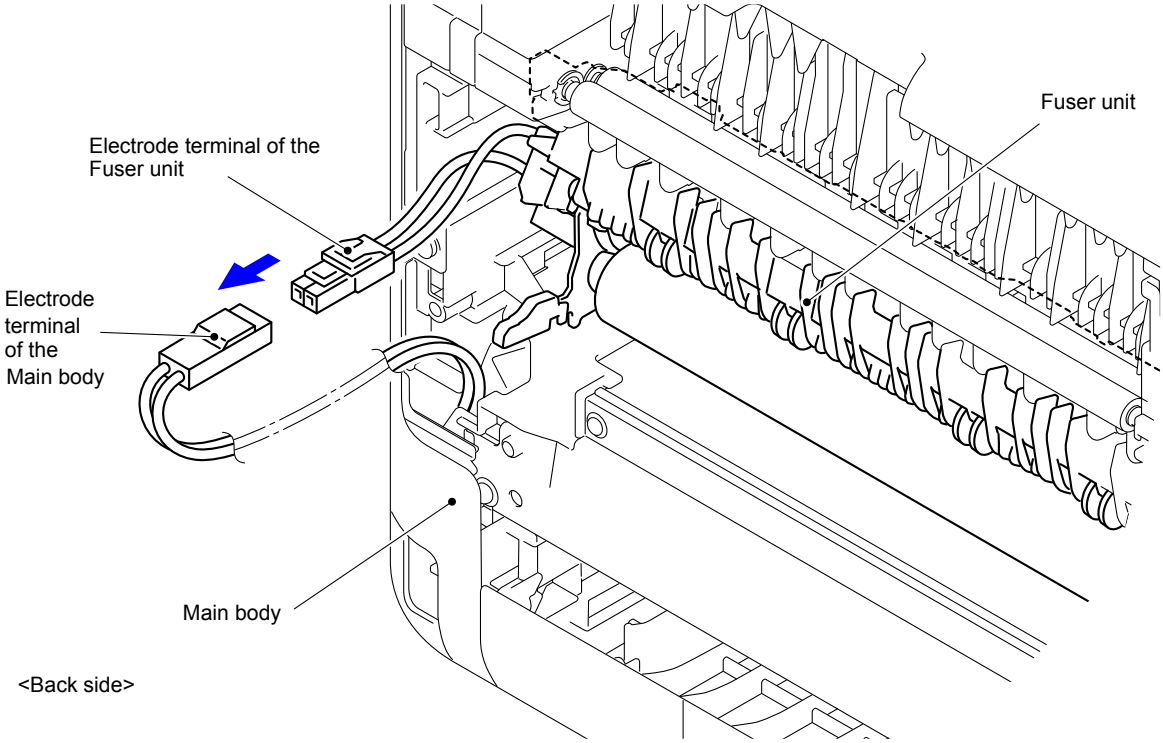

Fig. 3-18

(5) Remove the two Taptite pan B M4x14 screws to remove the Fuser unit from the Main body.

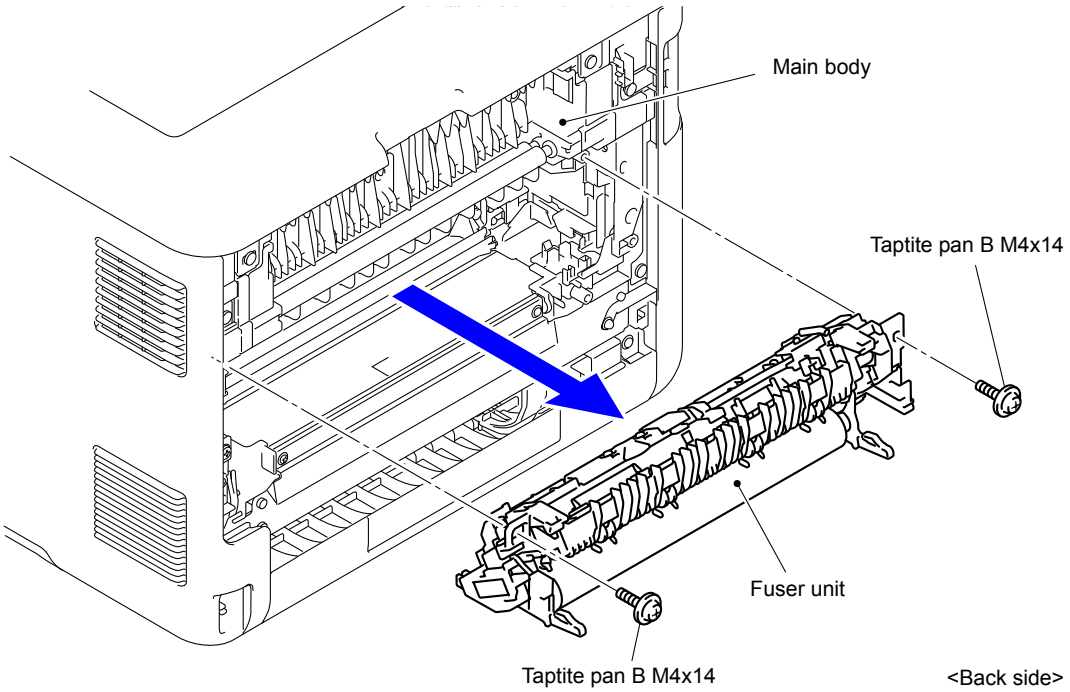

Fig. 3-19

Note:

- Do not apply a physical impact or vibration to the Fuser unit.
- Do not touch the roller and electrodes as shown in the figure below to prevent breakage of the Fuser unit.

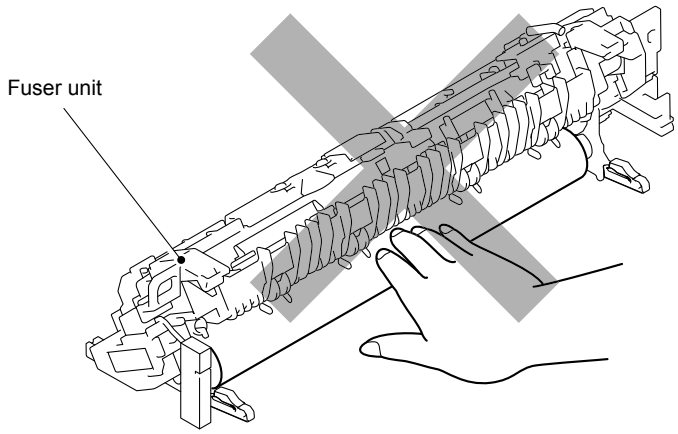

Fig. 3-20

Harness routing: Refer to " 7 Eject Sensor PCB ASSY, Fuser Unit"

9.7 Side Cover L ASSY

(1) Open the Front cover.

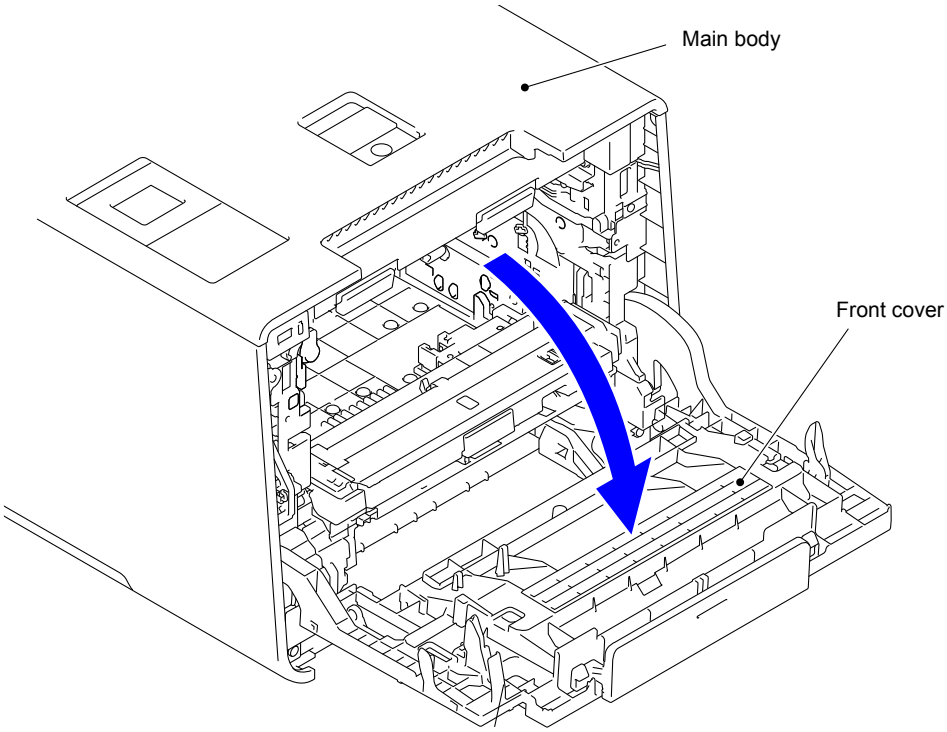

Fig. 3-21

(2) Remove the one Taptite B 3x6 screw and the one Taptite bind B M4x12 screw from the front of the Side cover L ASSY.
(3) Remove the Taptite bind B M4x12 screw from the side of the Side cover L ASSY.

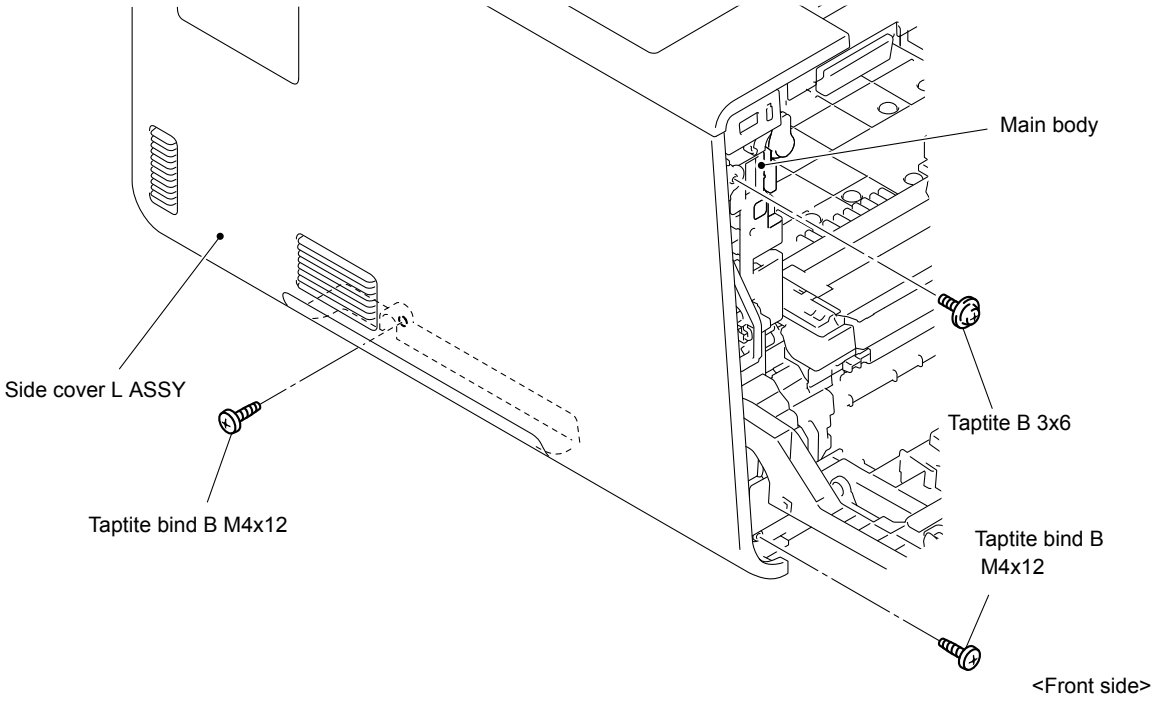

Fig. 3-22

(4) Remove the two Taptite bind B M4x12 screws from the back of the Side cover L ASSY.

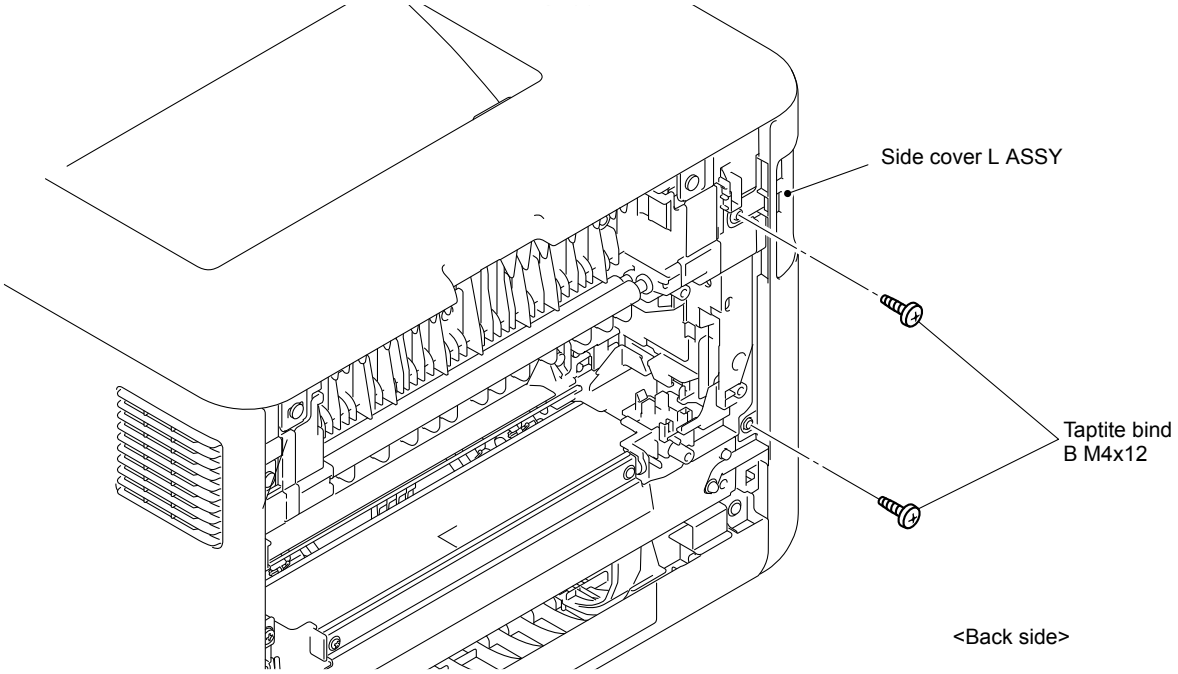

Fig. 3-23

(5) Release the Hooks 1 to 8 in numerical order. Move the Side cover L ASSY in the direction of the arrow 5a and release the Hook 9 and remove the Side cover L ASSY from the Main body.

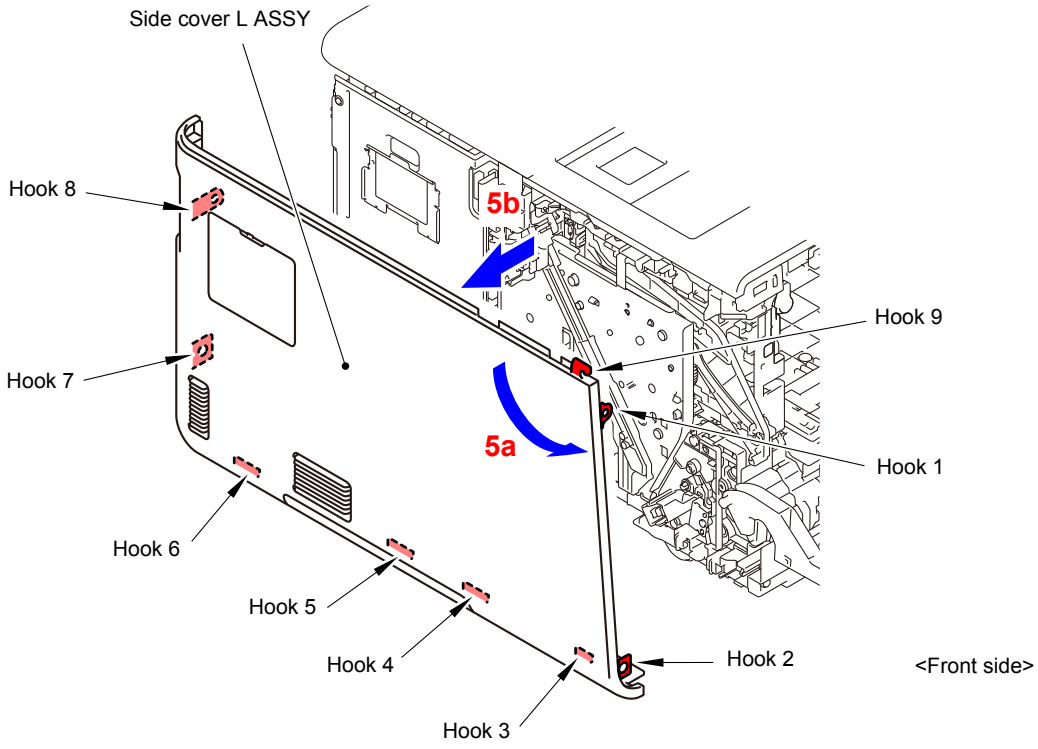

Fig. 3-24

* Inside of Side cover L ASSY

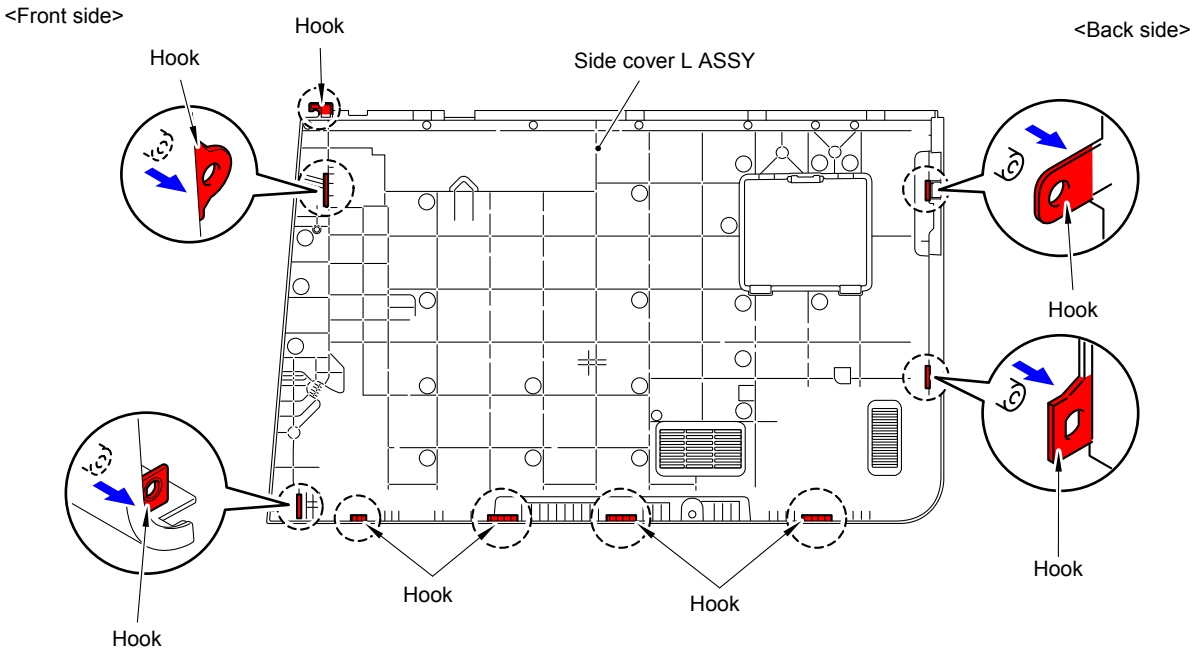

Fig. 3-25

Confidential

9.8 Side Cover R

(1) Remove the one Taptite B 3x6 screw and the one Taptite bind B M4x12 screw from the front of the Side cover R.

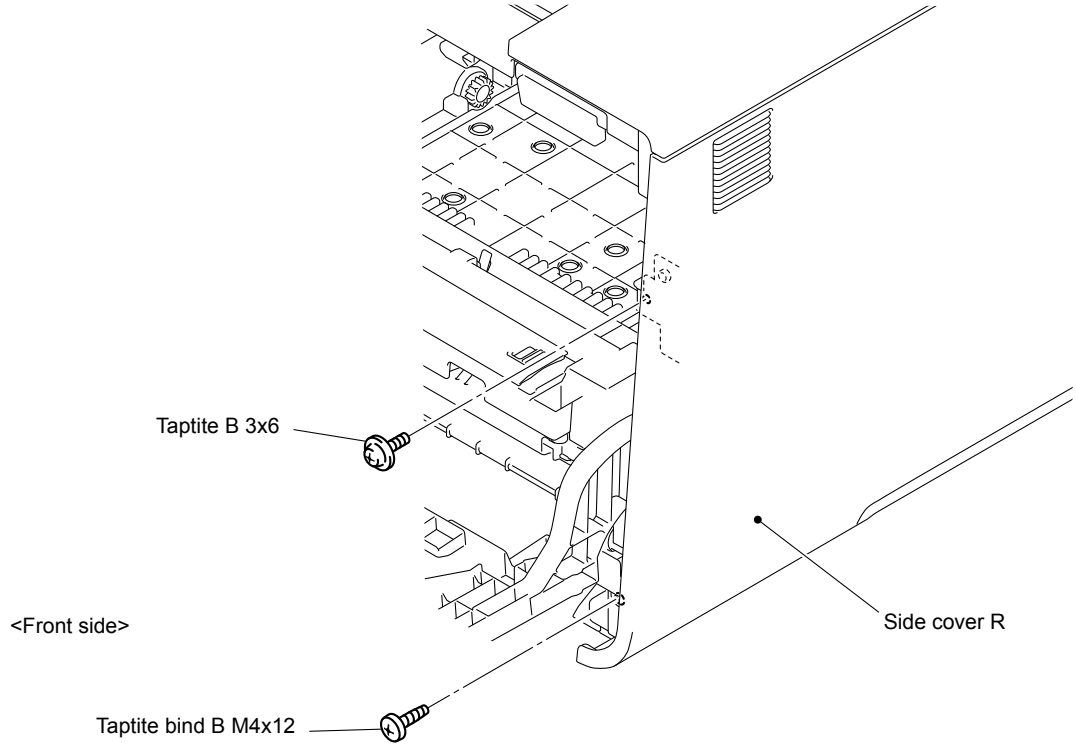

Fig. 3-26

(2) Remove the two Taptite bind B M4x12 screws from the back of the Side cover R.

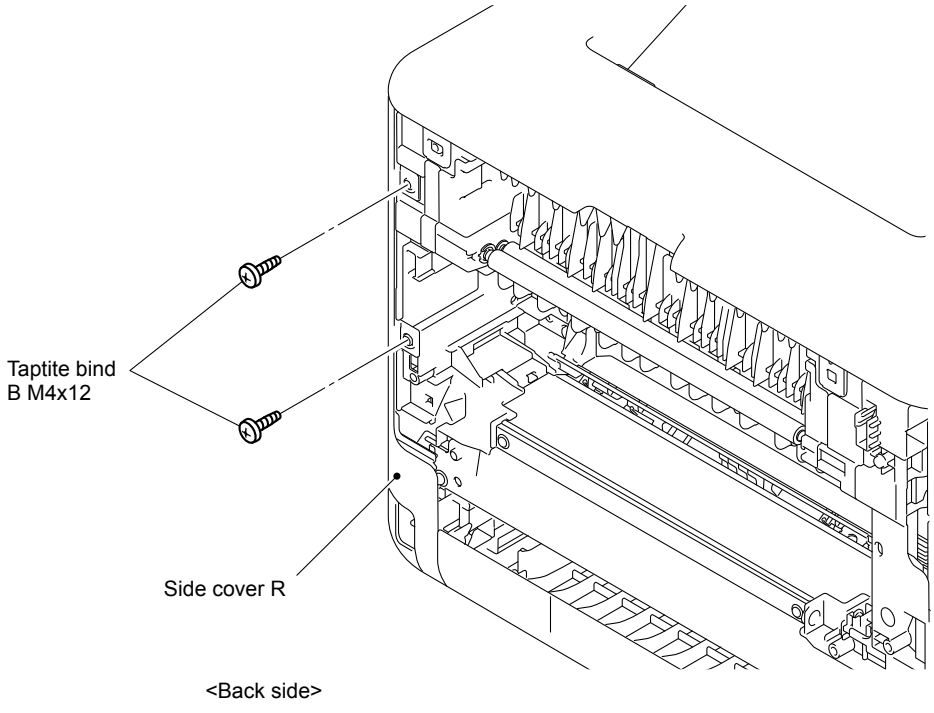

Fig. 3-27

(3) Release the Hooks 1 to 7 in numerical order. Move the Side cover R in the direction of the arrow 3a and release the Hook 8 and remove the Side cover R from the Main body.

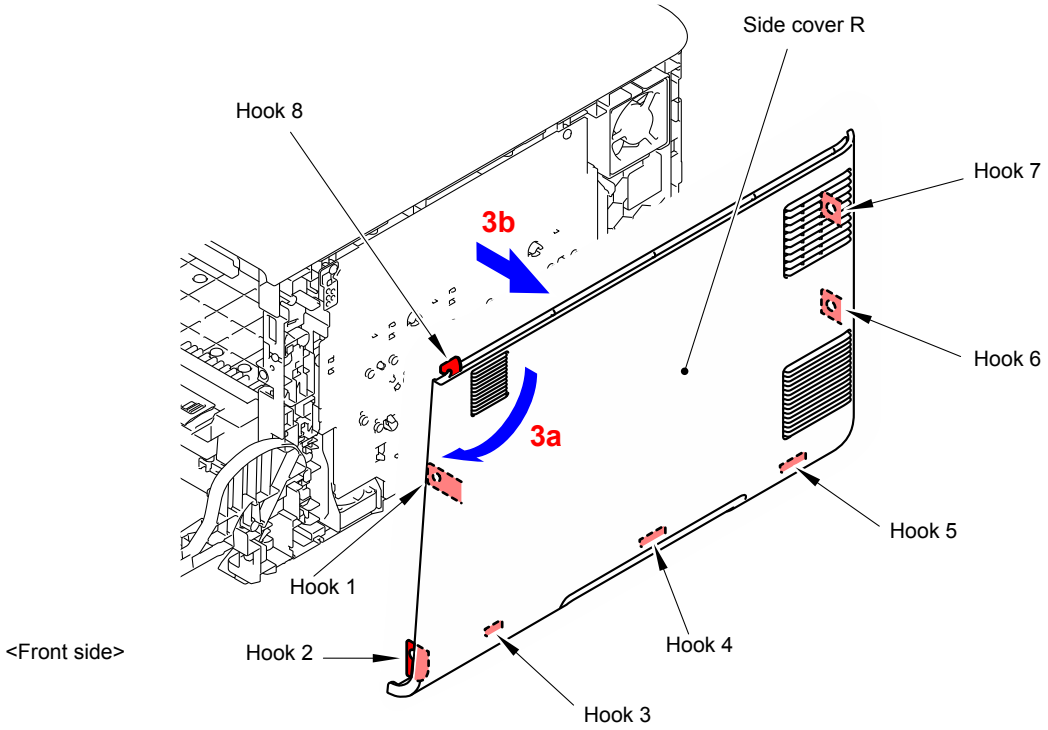

Fig. 3-28

* Inside of Side cover R

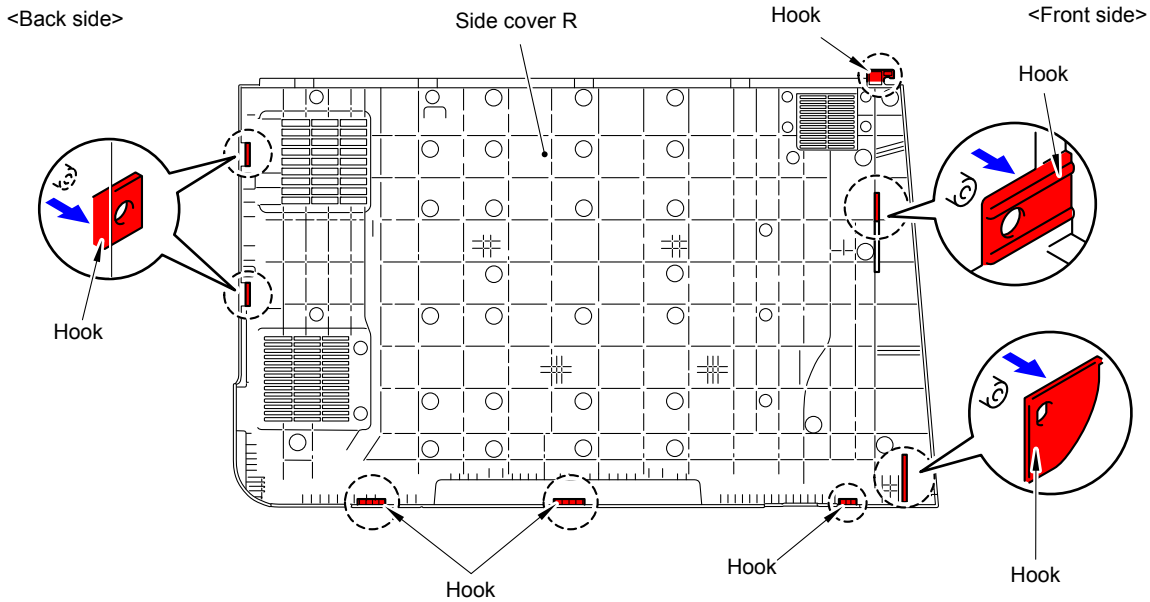

Fig. 3-29

Confidential

Note:
As the Spacer tends to come off, be careful not to lose it.

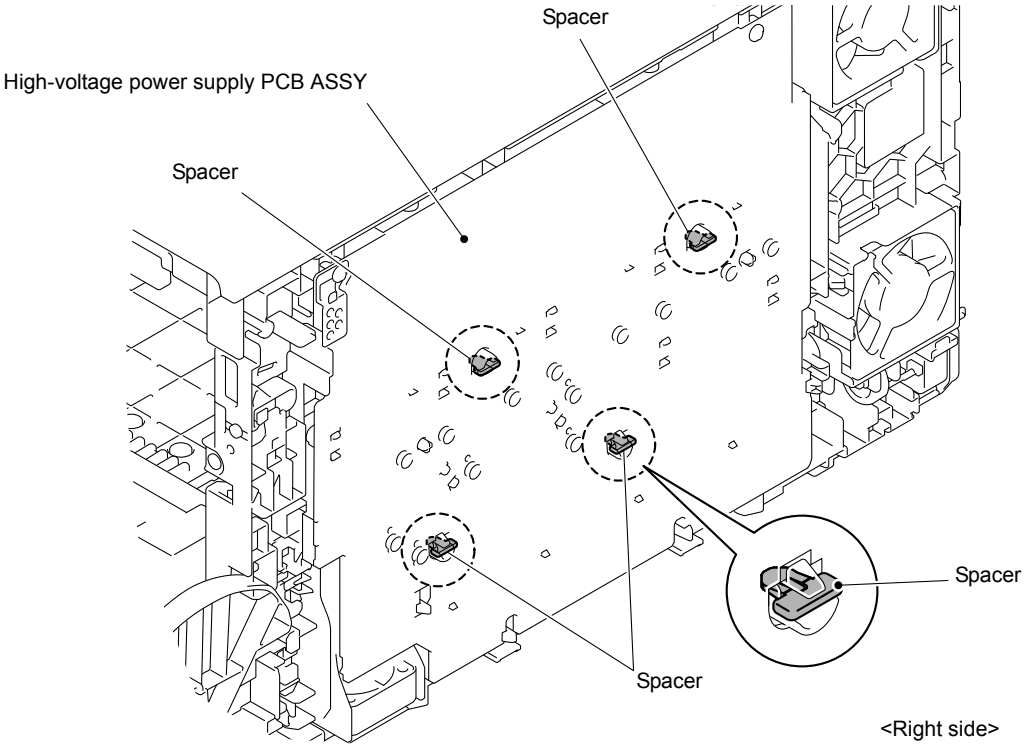

Fig. 3-30

9.9 Duplex Tray

(1) Remove the two Taptite cup B M3x12 screws and remove the Duplex tray from the Main body.

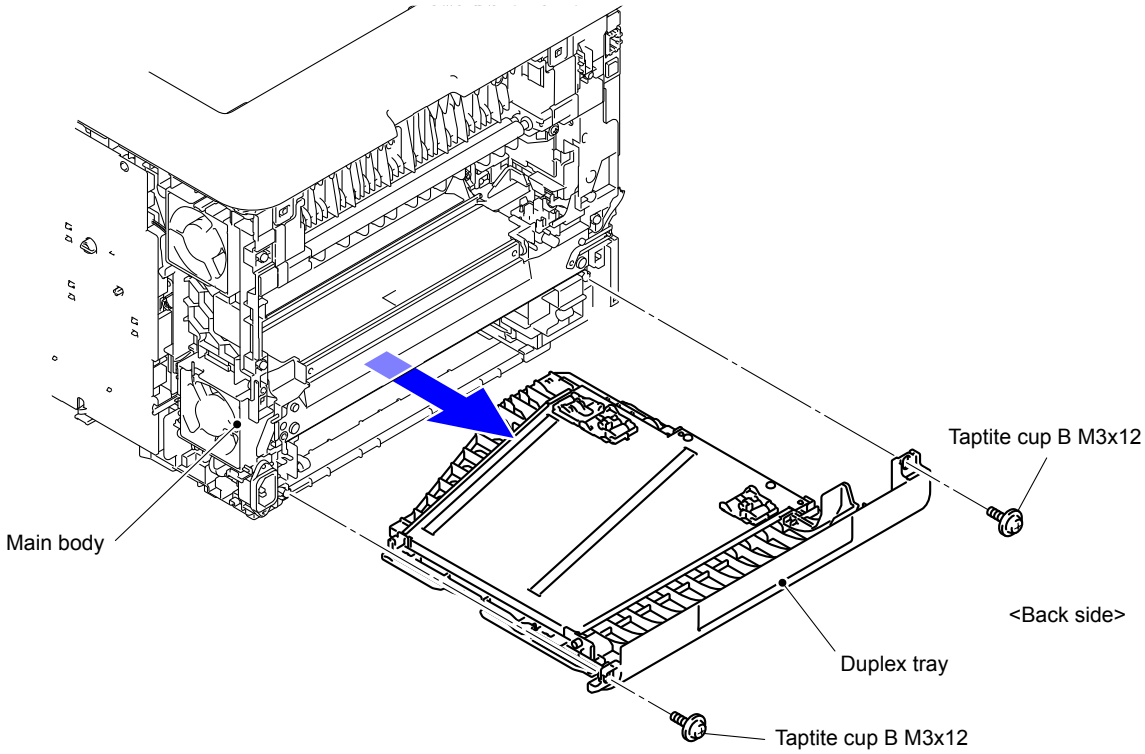

Fig. 3-31

9.10 MP Cover ASSY/MP Paper Guide ASSY

(1) Close the Front cover.
(2) Open the MP cover ASSY.

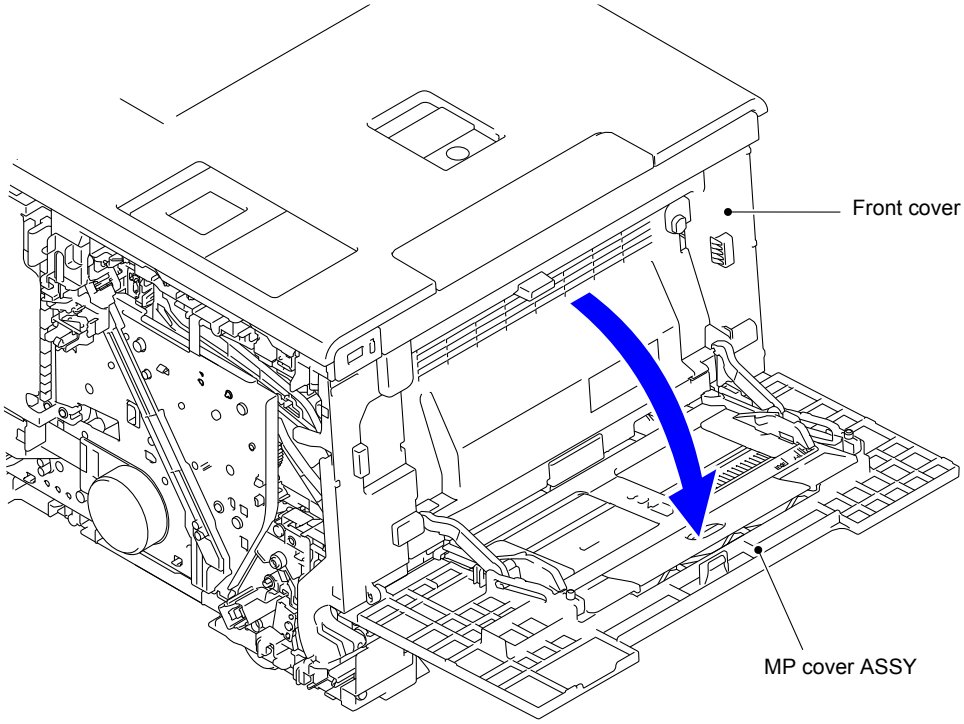

Fig. 3-32

(3) Release the Pin of the MP link L from the MP cover ASSY.
(4) Release the Pin of the MP link R from the MP cover ASSY.

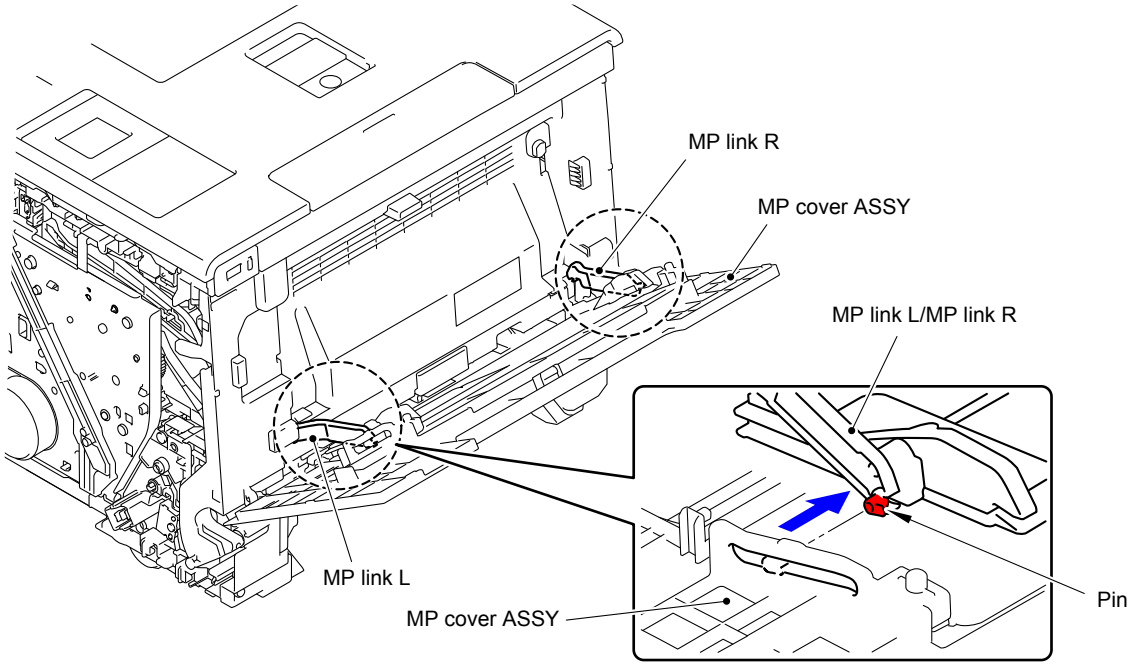

Fig. 3-33

Confidential

(5) Release the Pin of the MP link L from the MP paper guide ASSY.

(6) Release the Pin of the MP link R from the MP paper guide ASSY.

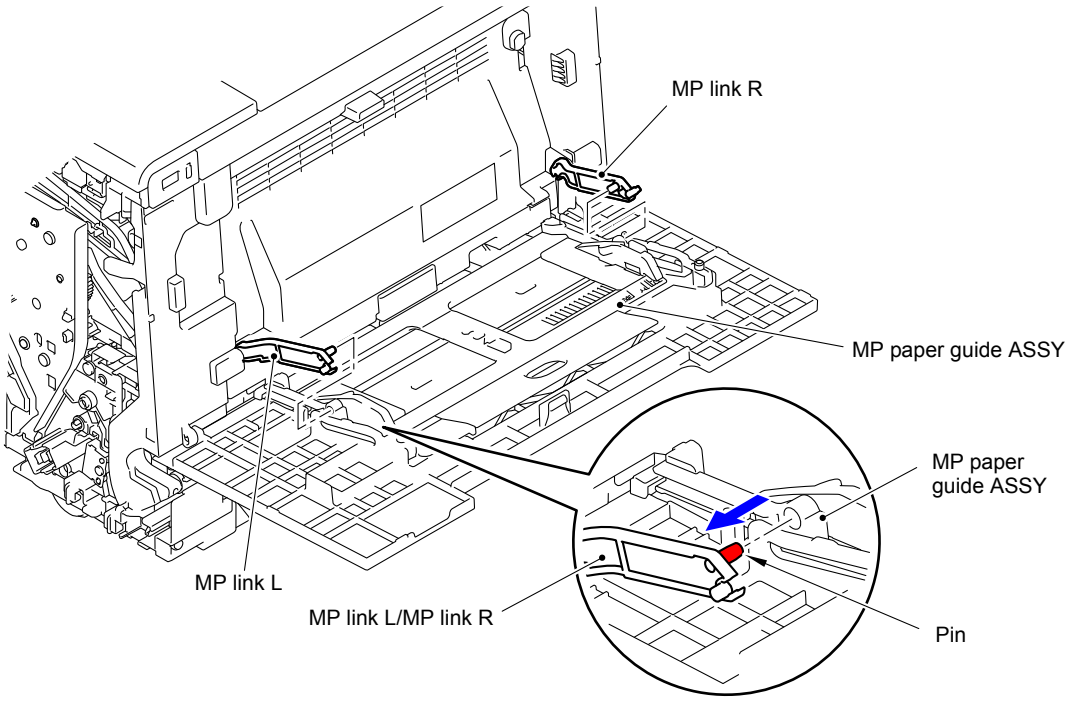

Fig. 3-34

(7) Slide the MP paper guide ASSY in the direction of the arrow 7b and remove it from MP cover ASSY.

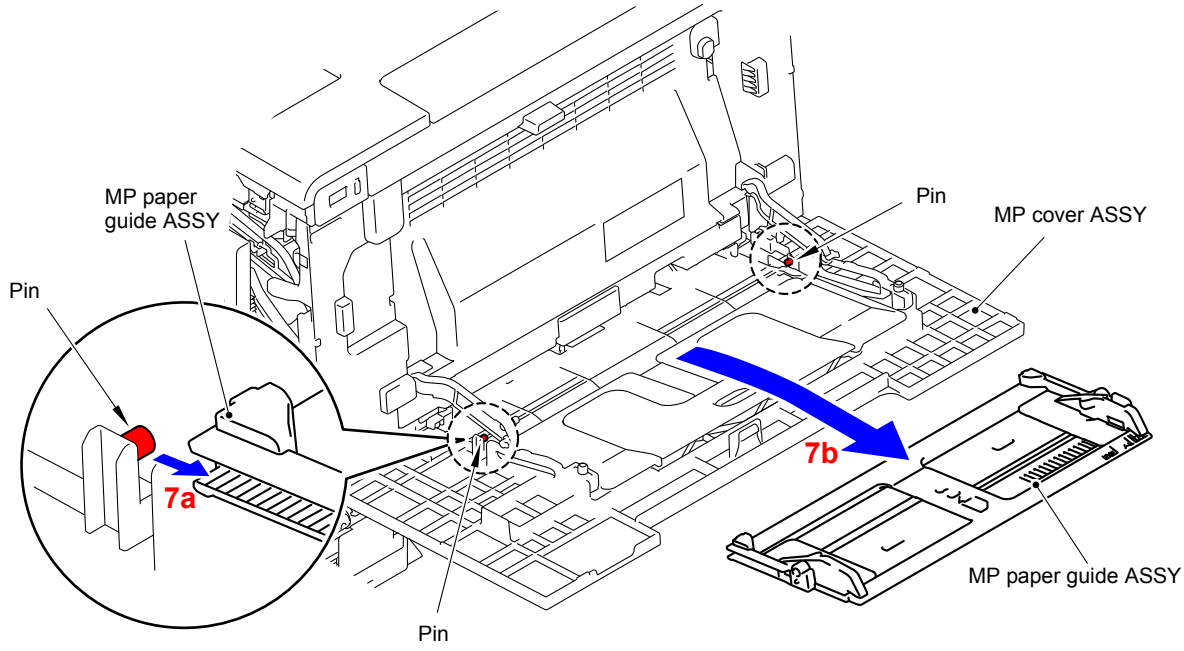

Fig. 3-35

(8) Release the two Pins and remove the MP cover ASSY from the Front cover.

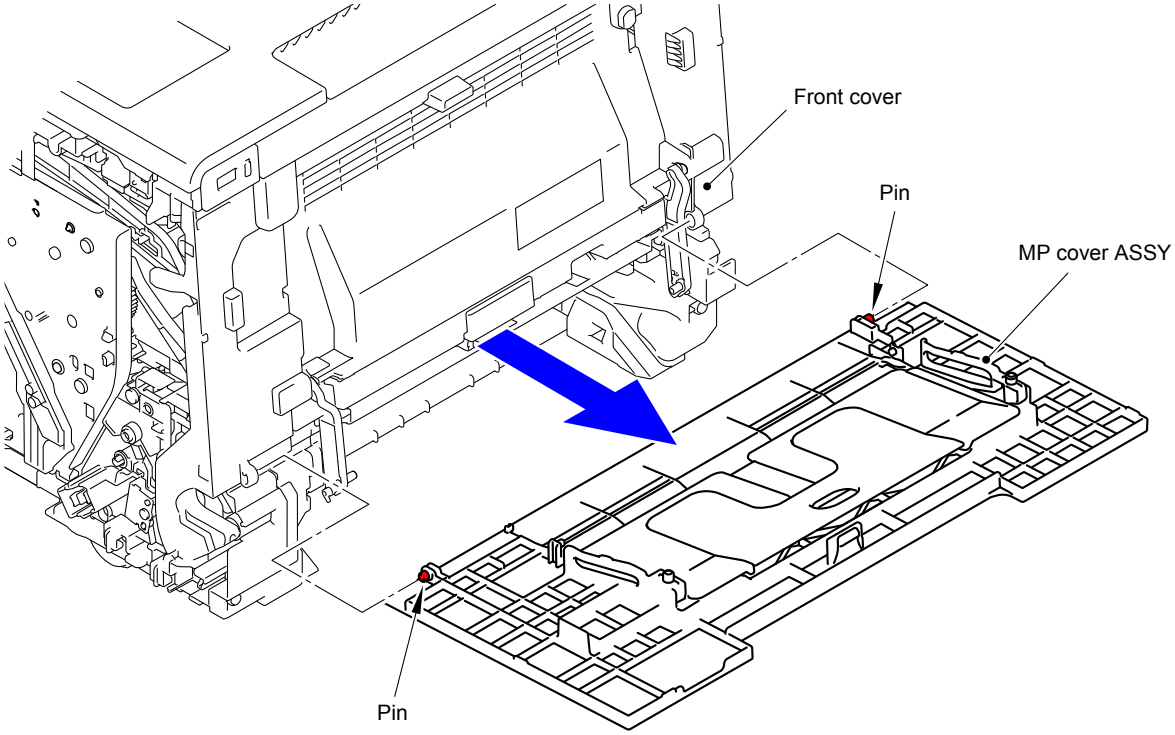

Fig. 3-36

9.11 MP Link L/MP Link R

(1) Remove the MP link L from the Front cover.

(2) Remove the MP link R from the Front cover.

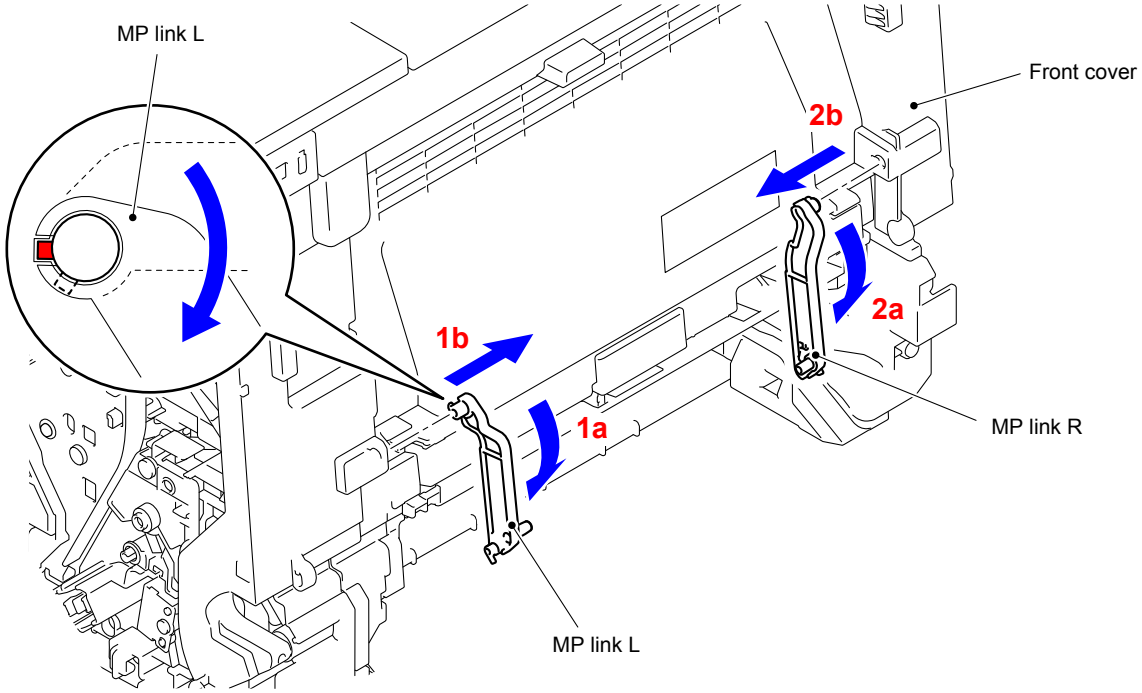

Fig. 3-37

Confidential

9.12 Front Cover

(1) Remove the Front cover damper spring from the Spring hook of the Main frame R ASSY.
(2) Remove the Taptite B 3x6 screw and remove the Front cover damper spring from the Front cover.

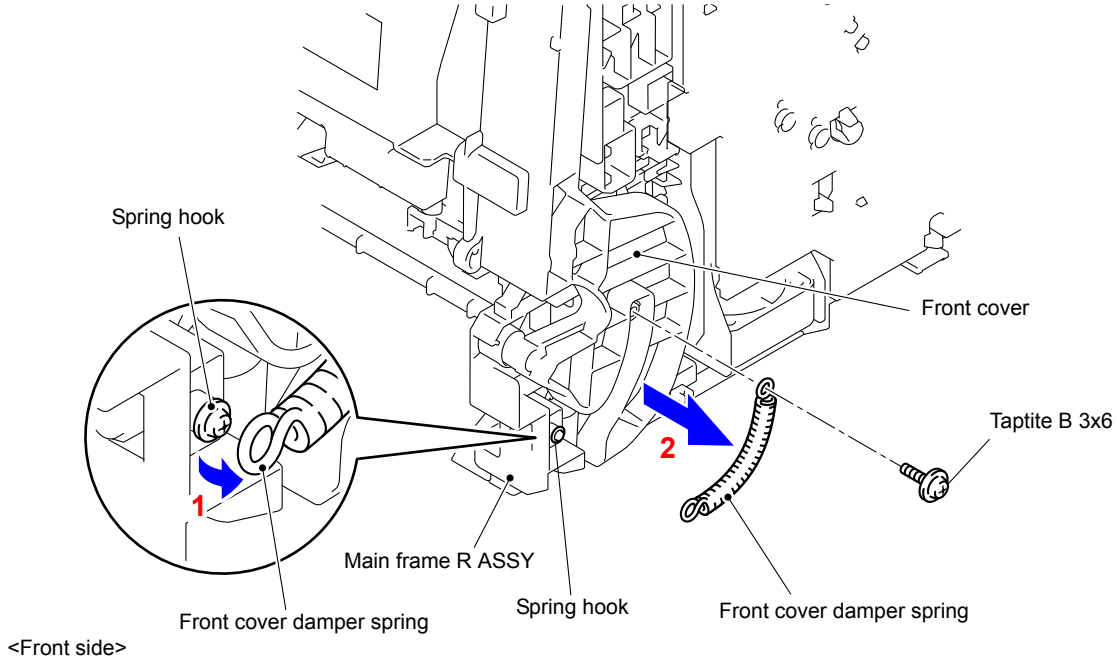

Fig. 3-38

(3) Open the Front cover.
(4) Release the Hook and remove the Forced develop release link from the Front cover.

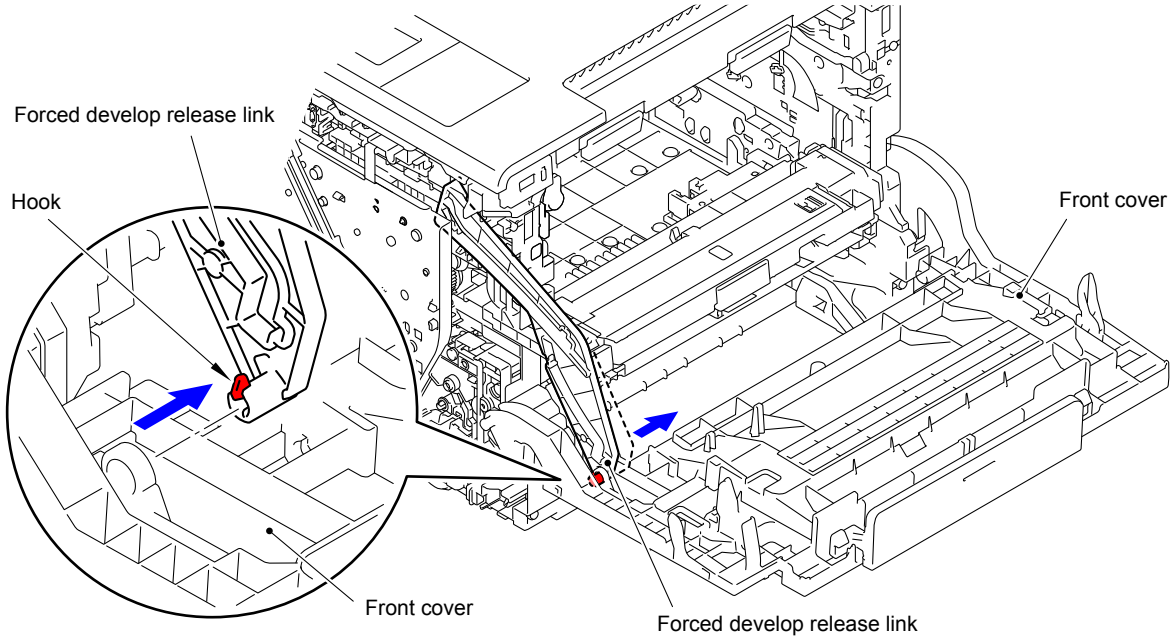

Fig. 3-39

(5) Release the three Bosses and remove the Front cover from the Main body.

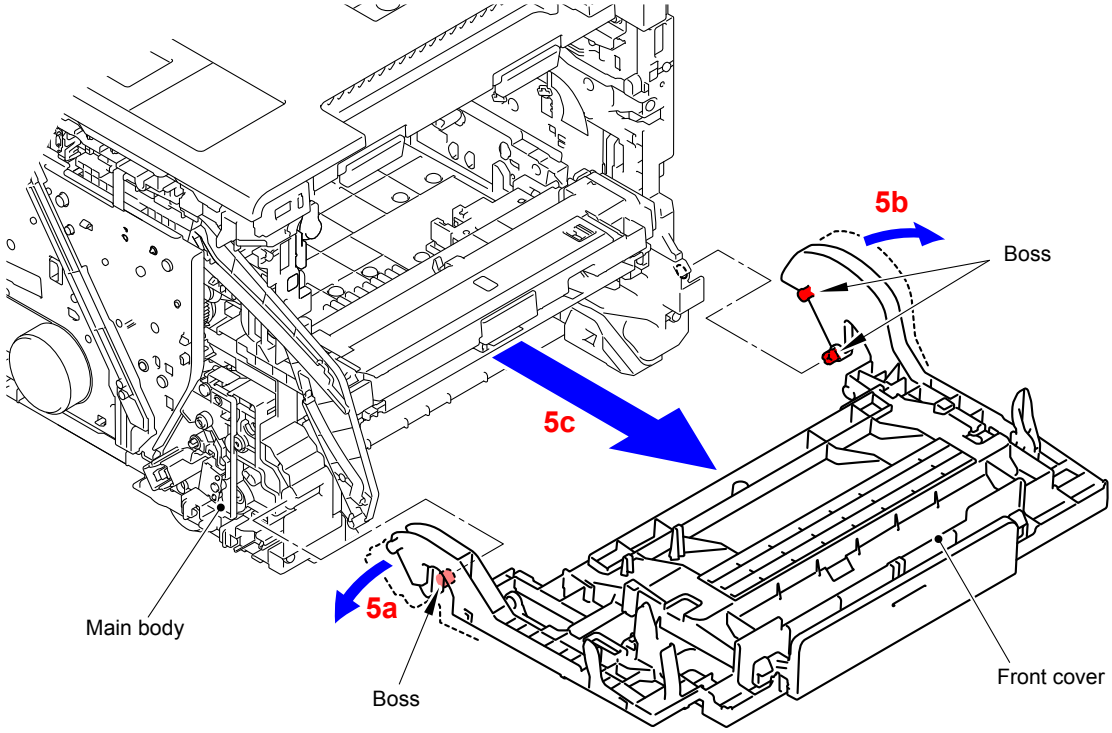

Fig. 3-40

Confidential

9.13 Front Cover Release Button/ Front Cover Release Button Spring

(1) Release the Hook, tilt the Front cover release button in the direction of the arrow 1b, and remove it from the Boss.

Assembling Note:
Align the Hole of the Front cover release button to the Boss of the Front cover and insert it into the Hole.

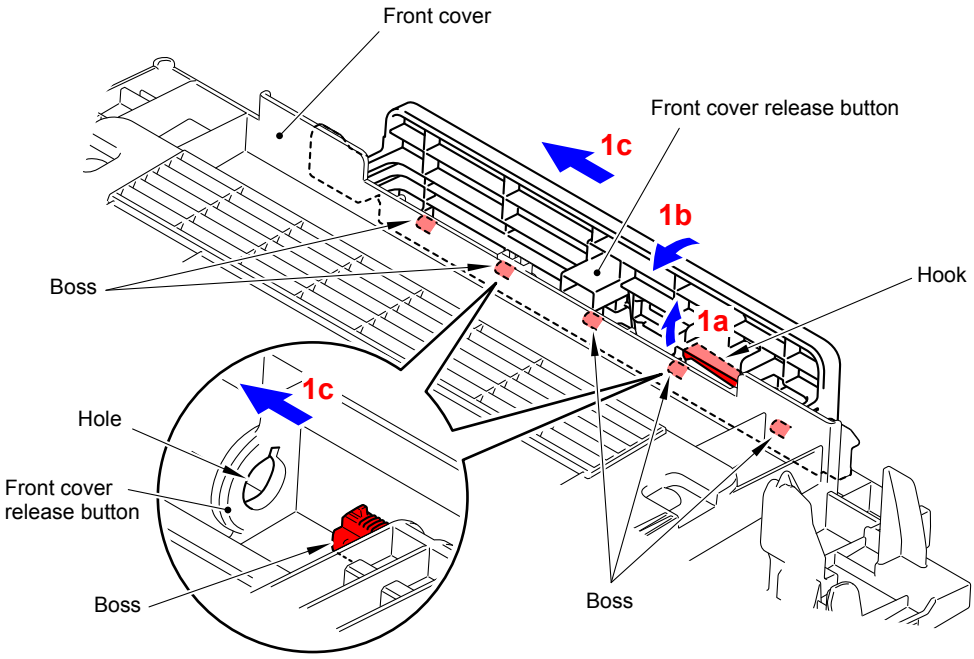

Fig. 3-41

(2) Tilt the Front cover release button in the direction of the arrow 2a, and remove it from the Front cover.

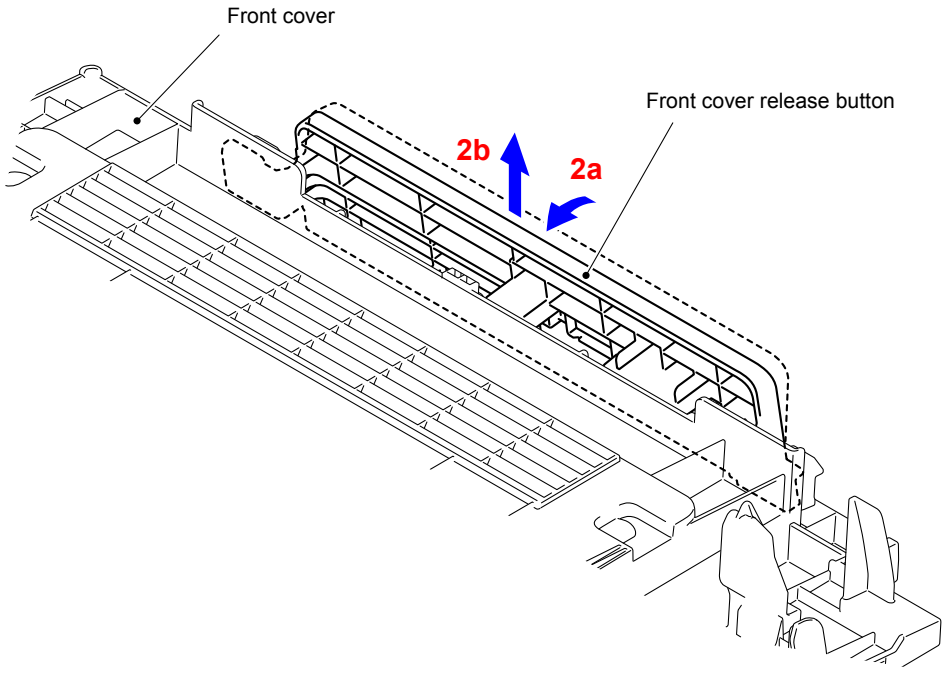

Fig. 3-42

(3) Remove the Front cover release button spring from the Front cover.

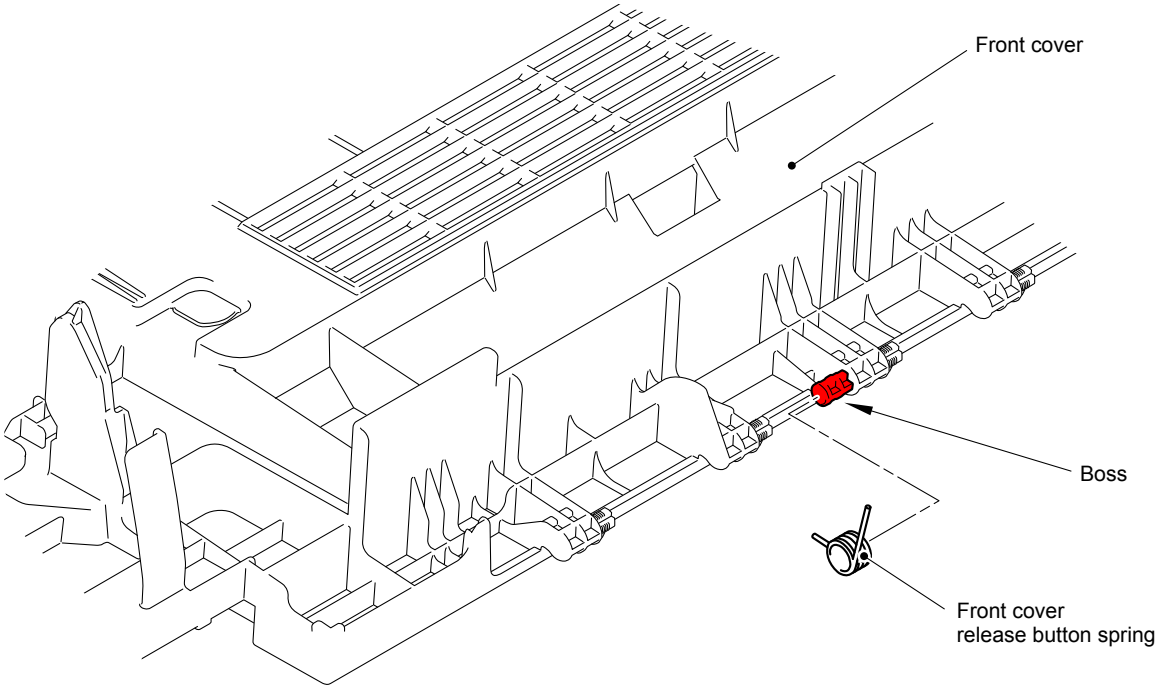

Fig. 3-43

Assembling Note:
When assembling the Front cover release button spring, attach “A” of the Front cover release button spring to the cutout of the Front cover release button.

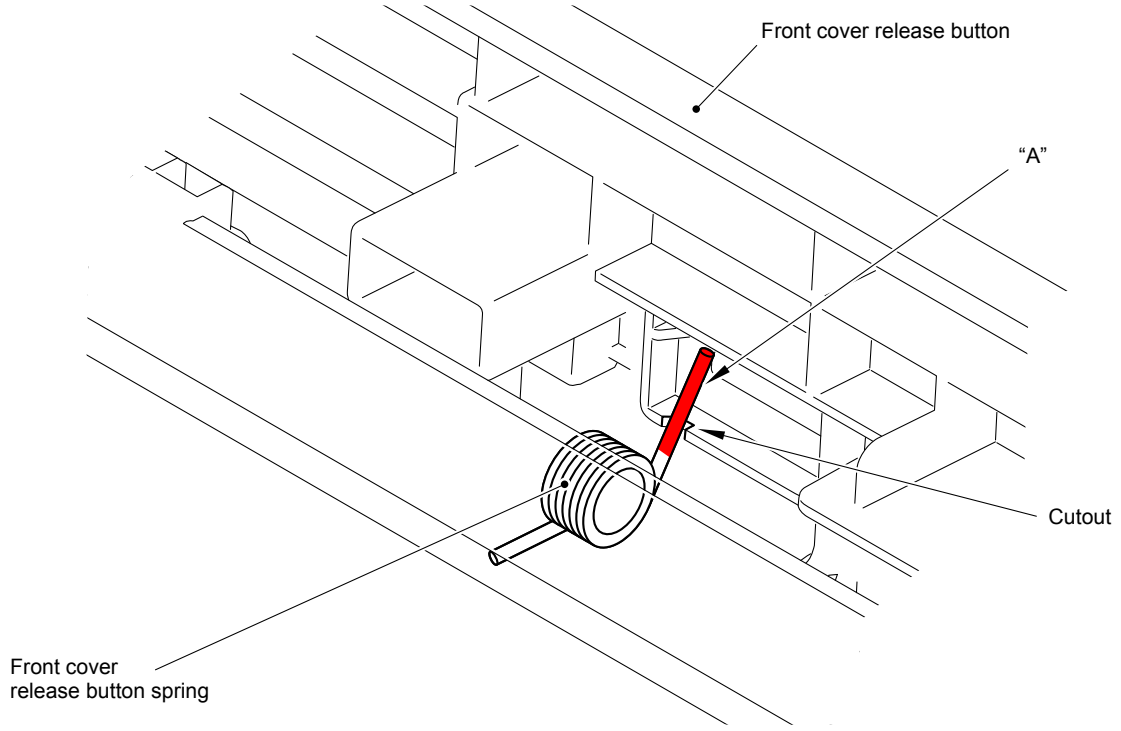

Fig. 3-44

Confidential

9.14 Top Cover ASSY

(1) Remove the four Screw bind M3x8 screws and remove the Main shield cover plate ASSY from the Main body.

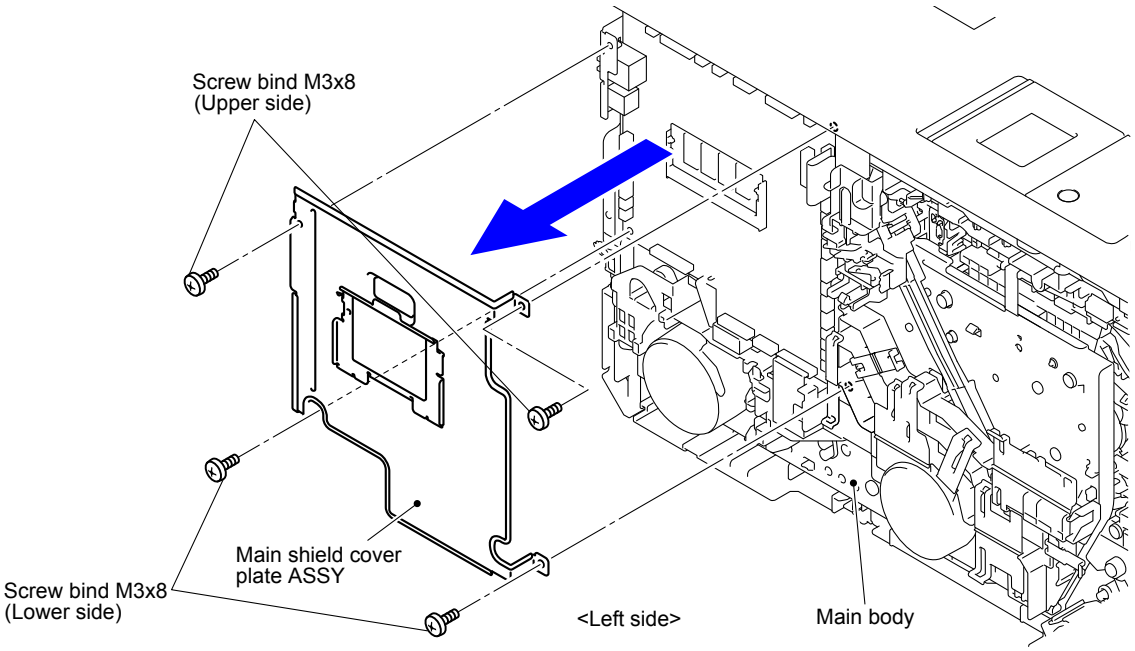

Fig. 3-45

Note:
Note that the tightening torque is different between the upper side and lower side of the Screw bind M3x8.
Upper side: 0.5±0.05 N·m
Lower side: 0.8±0.1 N·m

(2) In the case of model without touch panel, disconnect the three Connectors (CN5, CN6 and CN23) from the Main PCB ASSY and release the wiring.
In the case of model with touch panel, disconnect the three Connectors (CN5, CN6 and CN18) from the Main PCB ASSY and release the wiring.

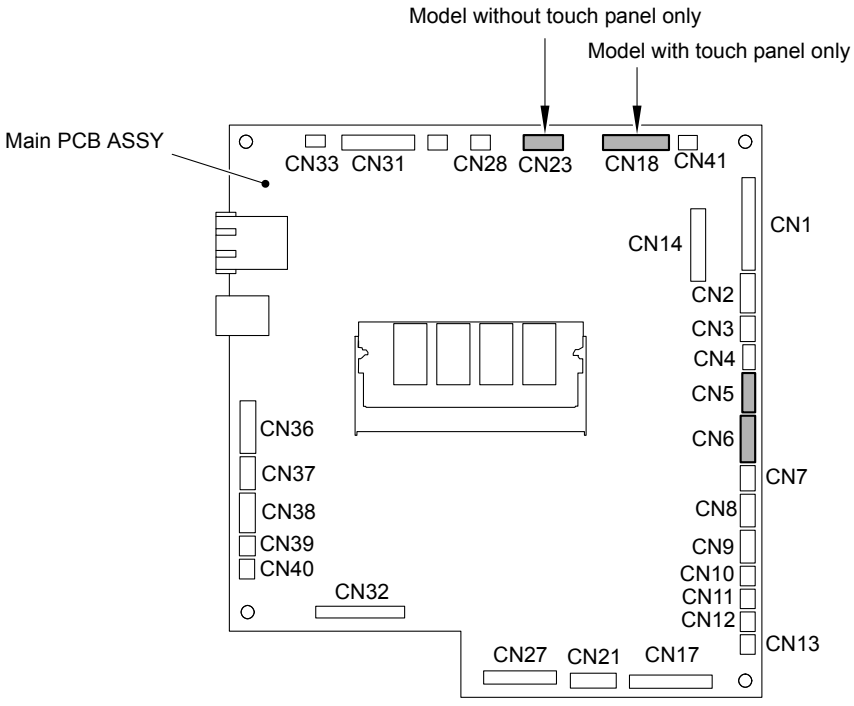

Fig. 3-46

(3) Remove the Taptite cup S M3x8 SR screw from the front of the Top cover ASSY.

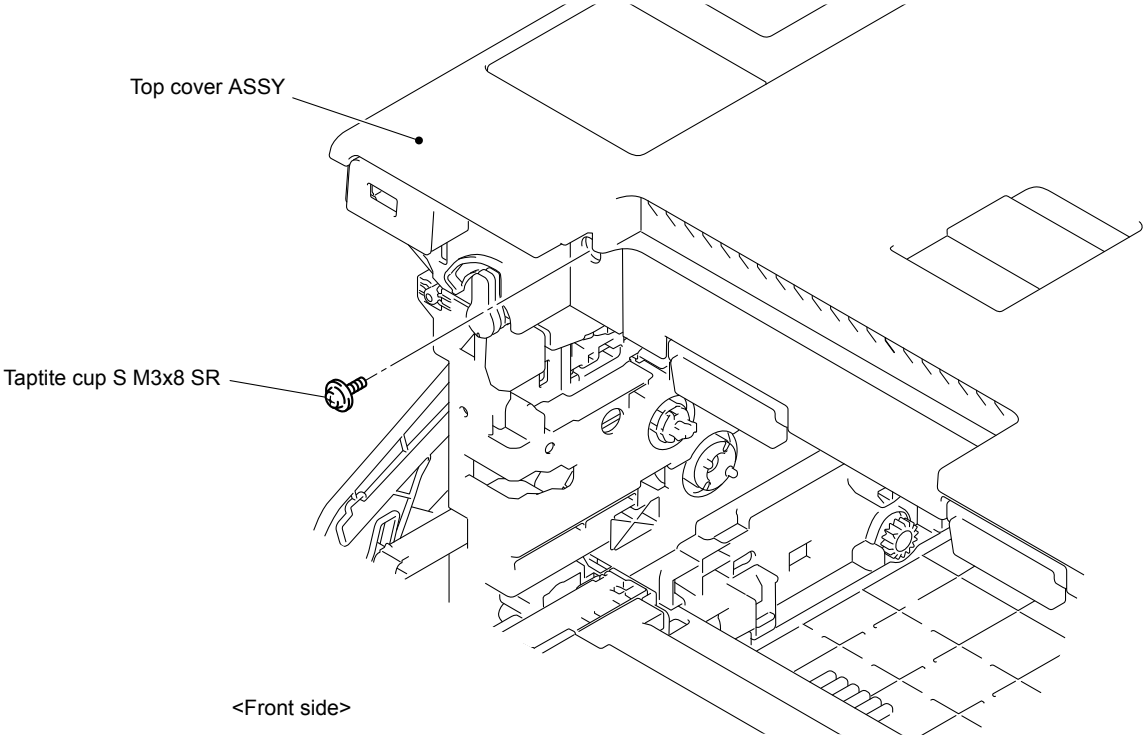

Fig. 3-47

Assembling Note:
Never fail to tighten the screw if the machine to be repaired is a model with a screw.

(4) Remove the two Taptite bind B M4x12 screws from the back of the Top cover ASSY.

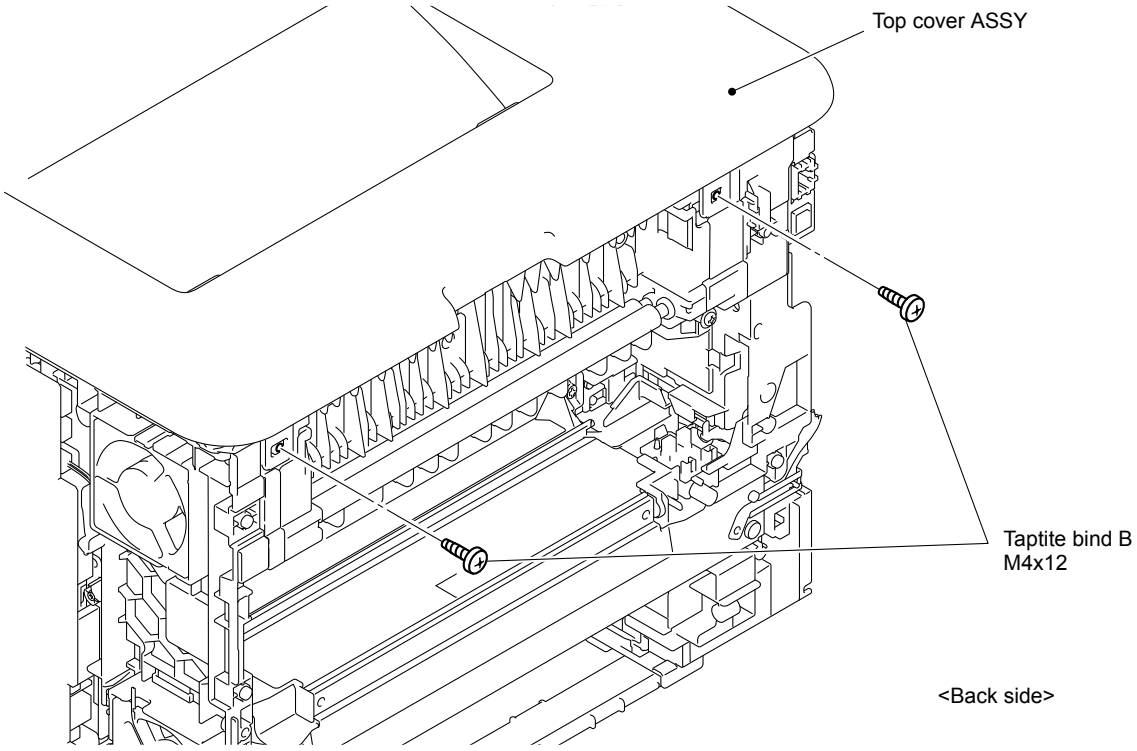

Fig. 3-48

(5) Release the three Hooks 1 and two Bosses. Release the other six Hooks and remove the Top cover ASSY from the Main body.

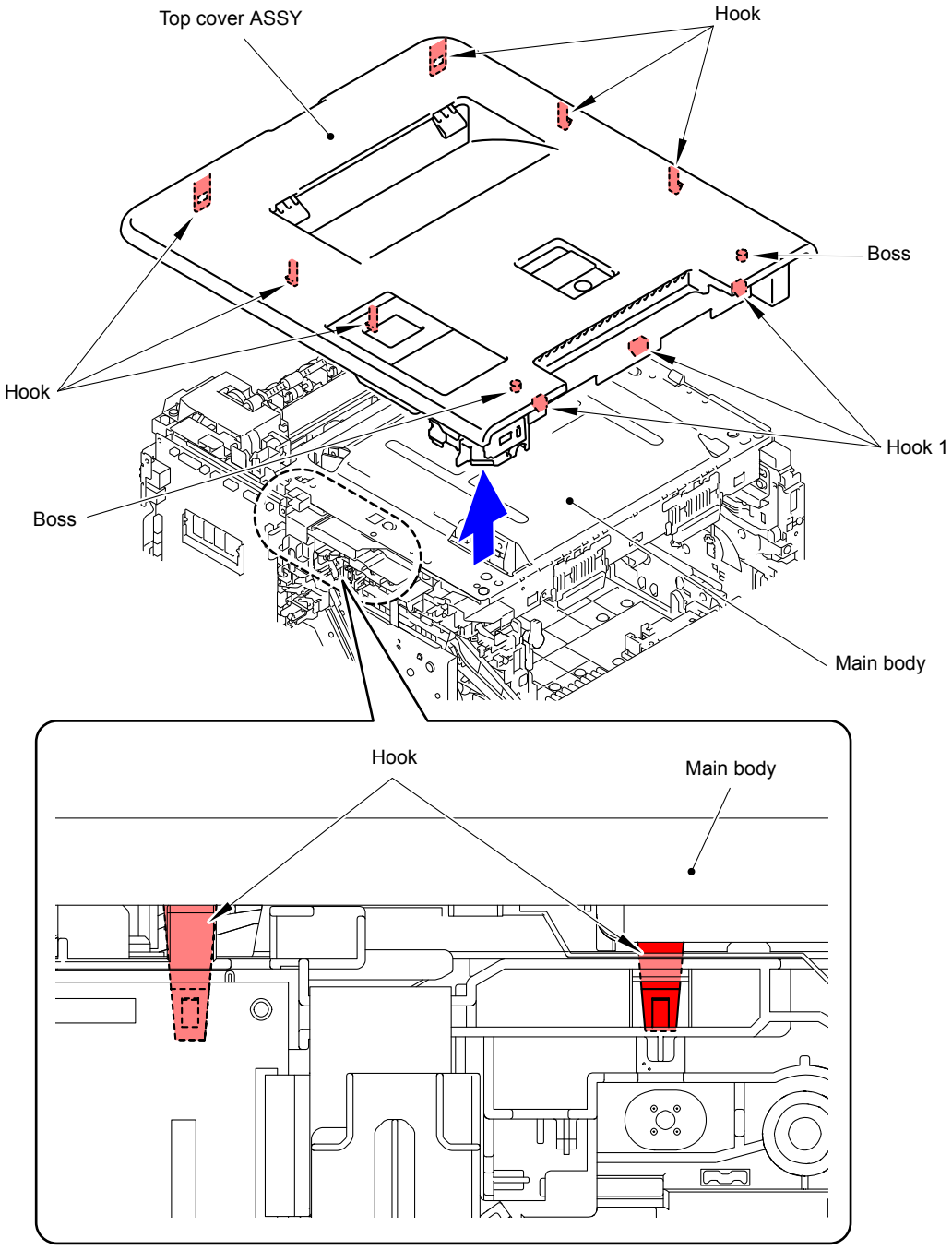

Fig. 3-49

Harness routing: Refer to " 1 Top Cover ASSY"

9.15 Wireless LAN PCB

(1) Turn the Top cover ASSY upside down.

(2) Release the Pin and remove the Wireless LAN PCB from the Top cover ASSY.

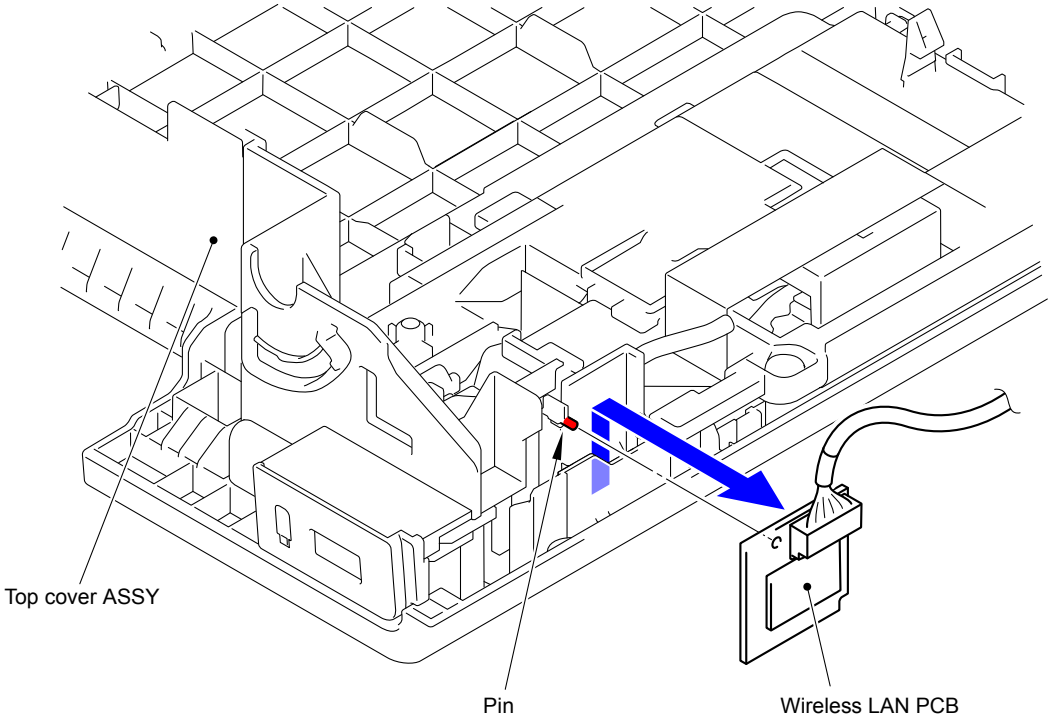

Fig. 3-50

(3) Disconnect the Main Wireless LAN harness ASSY from the Wireless LAN PCB.

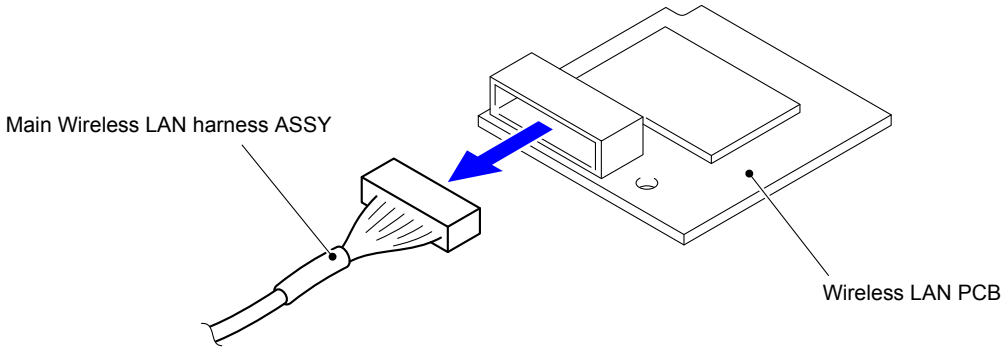

Fig. 3-51

9.16 Panel

■ Model with touch panel

9.16.1 Panel control PCB ASSY

(1) Disconnect the Panel relay PCB flat cable from the Panel control PCB ASSY.

(2) Disconnect the Key PCB flat cable from the Panel control PCB ASSY.

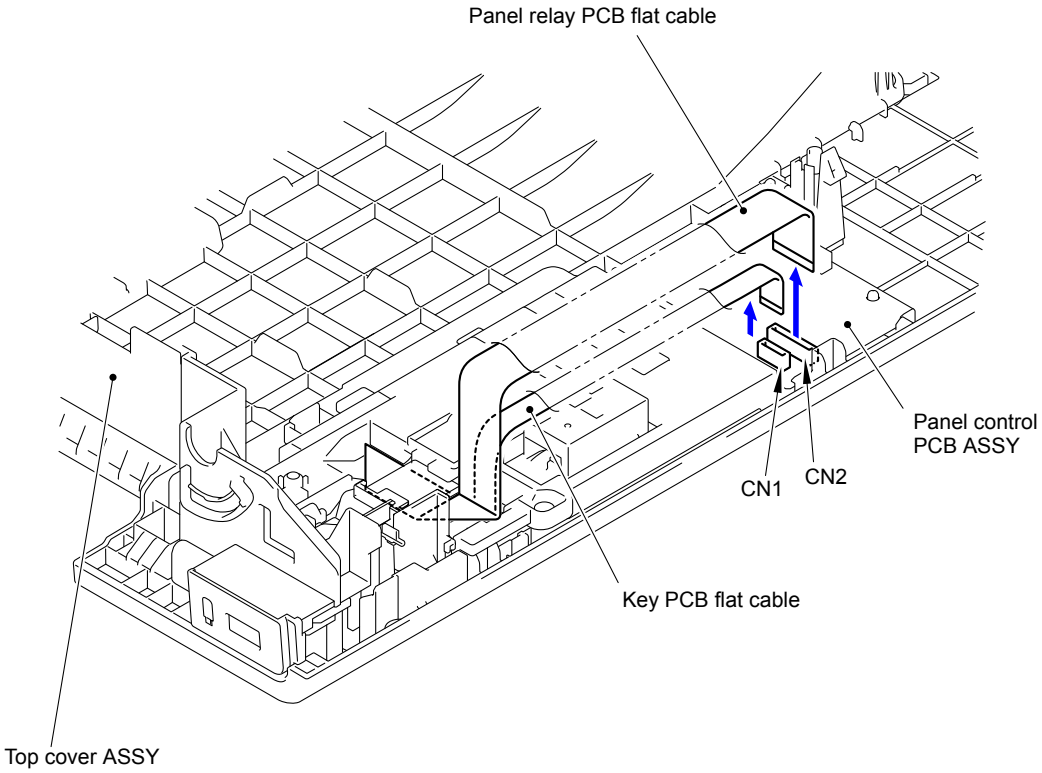

Fig. 3-52

Note:

- After disconnecting flat cables, check that each cable is not damaged at its end or short-circuited.
- When connecting flat cables, do not insert them at an angle. After insertion, check that the cables are not at an angle.

(3) Release the four Hooks and remove the Panel control PCB ASSY from the Top cover ASSY.

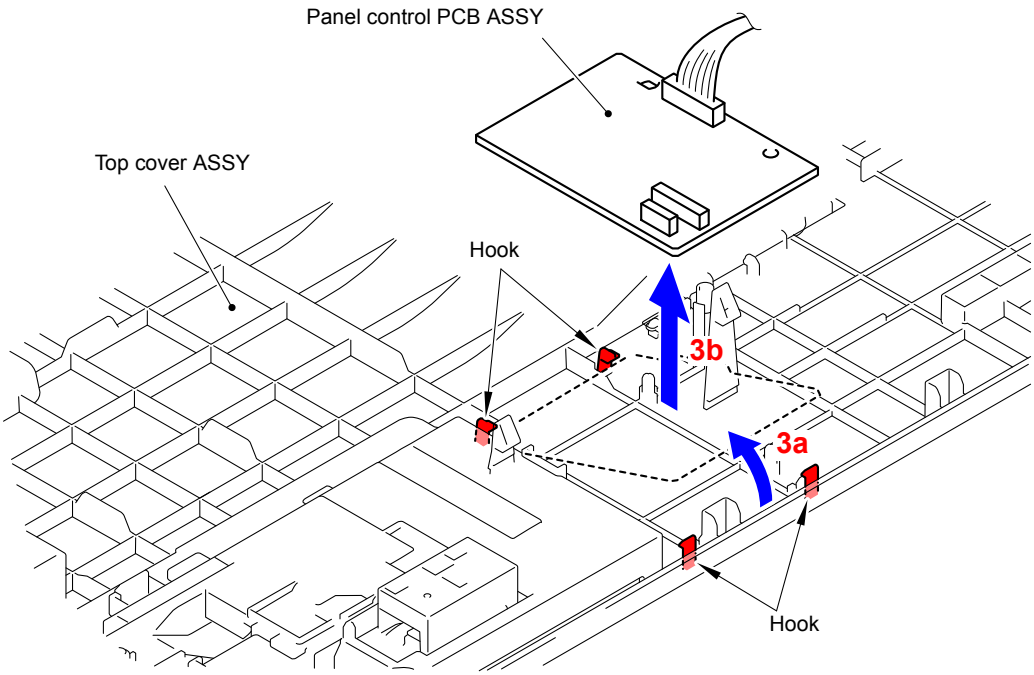

Fig. 3-53

(4) Disconnect the Panel control PCB harness ASSY from the Panel control PCB ASSY.

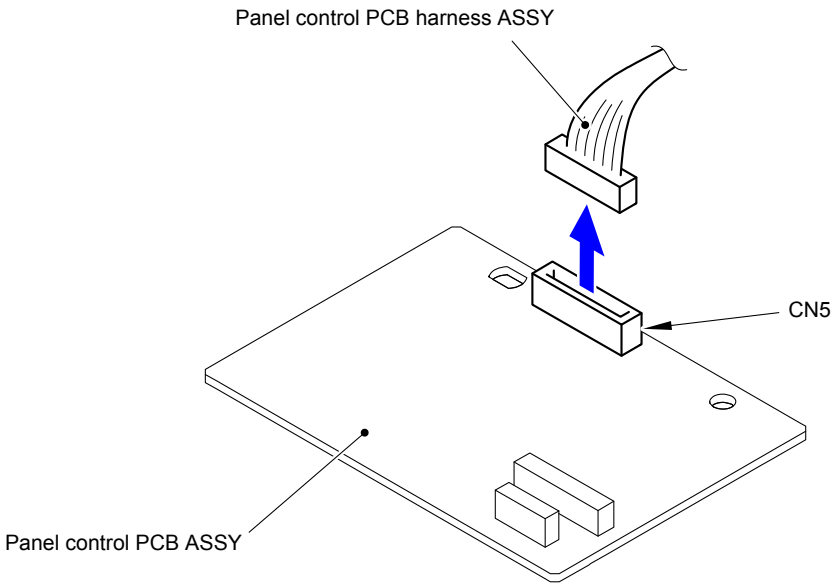

Fig. 3-54

9.16.1.1 Panel case ASSY/Key PCB flat cable/LCD panel ASSY

(1) Release the Hook and remove the Flat core from the Panel cover case lower.

(2) Pull out the Flat core from the Panel relay PCB flat cable.

(3) Remove the Taptite cup B M3x10 screw and remove the FG wire.

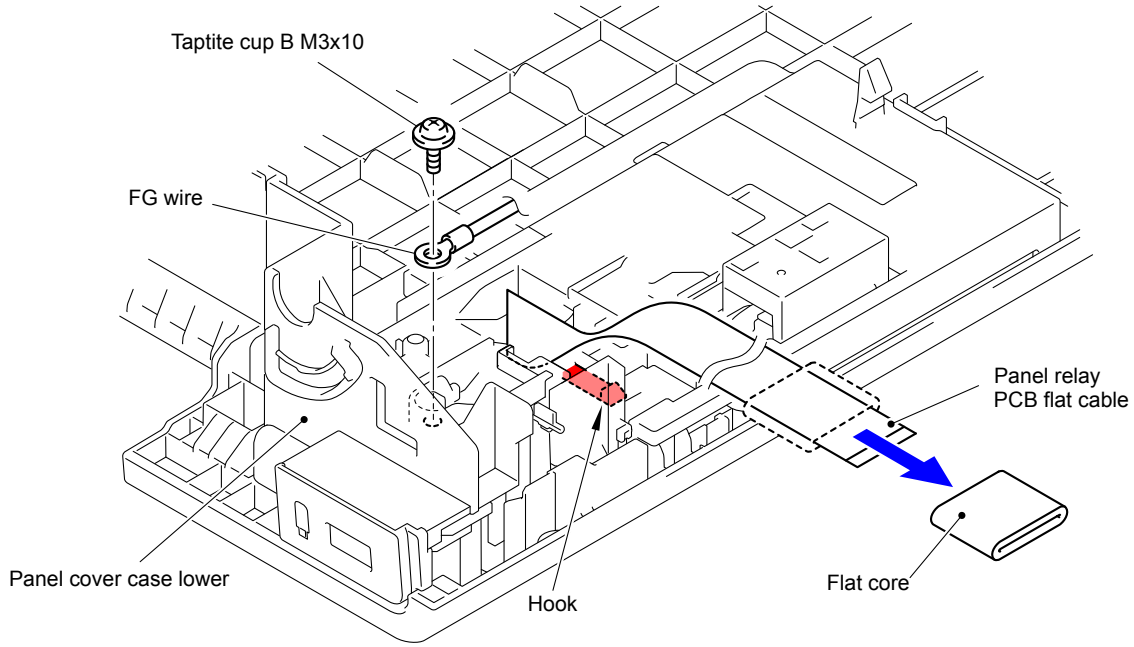

Fig. 3-55

<How to fold the Panel relay PCB flat cable>

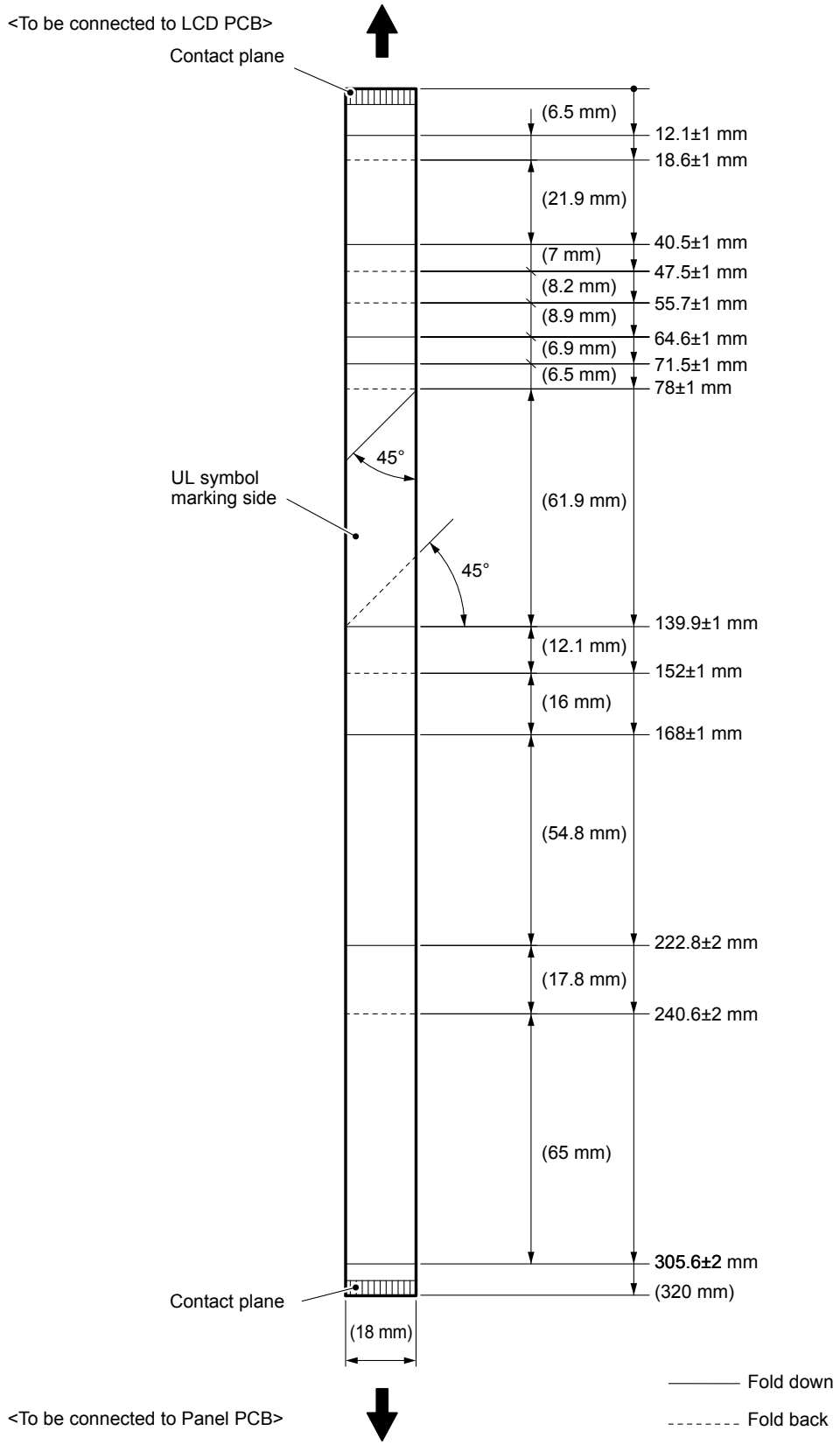

Fig. 3-56

Confidential

(4) Remove the two Taptite bind B M4x12 screws from the Panel cover case lower. Release the three Hooks and remove the Panel cover case lower from the Top cover ASSY.

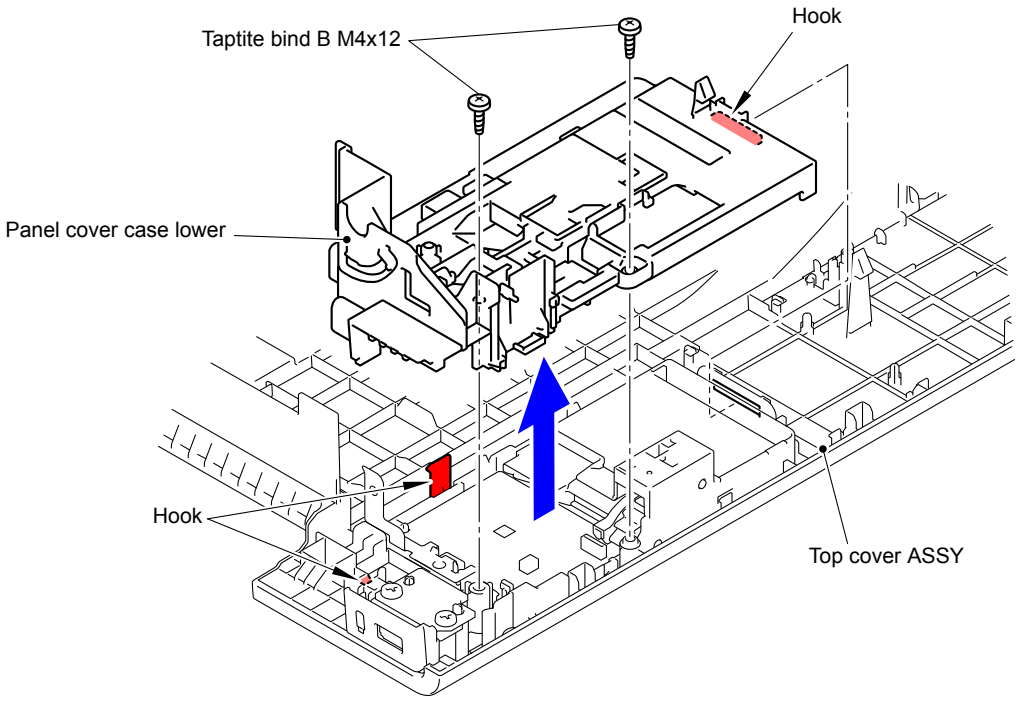

Fig. 3-57

(5) Release the eight Hooks and remove the Panel case ASSY from the Top cover ASSY.

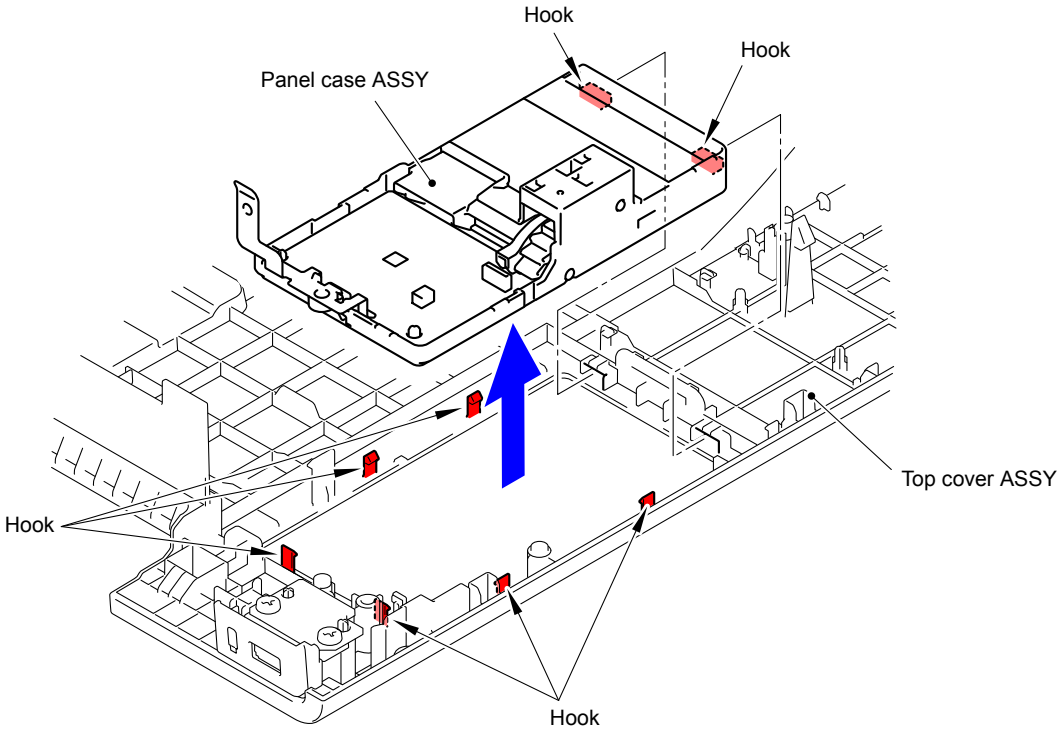

Fig. 3-58

(6) Disconnect the Key PCB flat cable from the Key PCB ASSY.

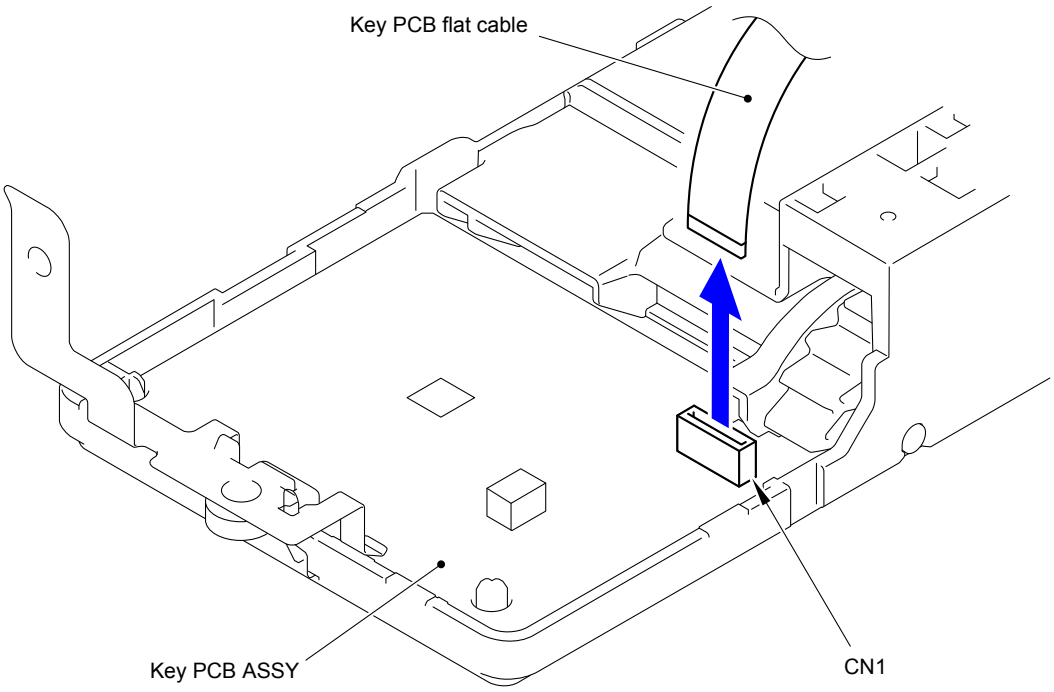

Fig. 3-59

Note:

- After disconnecting flat cables, check that each cable is not damaged at its end or short-circuited.
- When connecting flat cables, do not insert them at an angle. After insertion, check that the cables are not at an angle.

<How to fold the Key PCB flat cable>

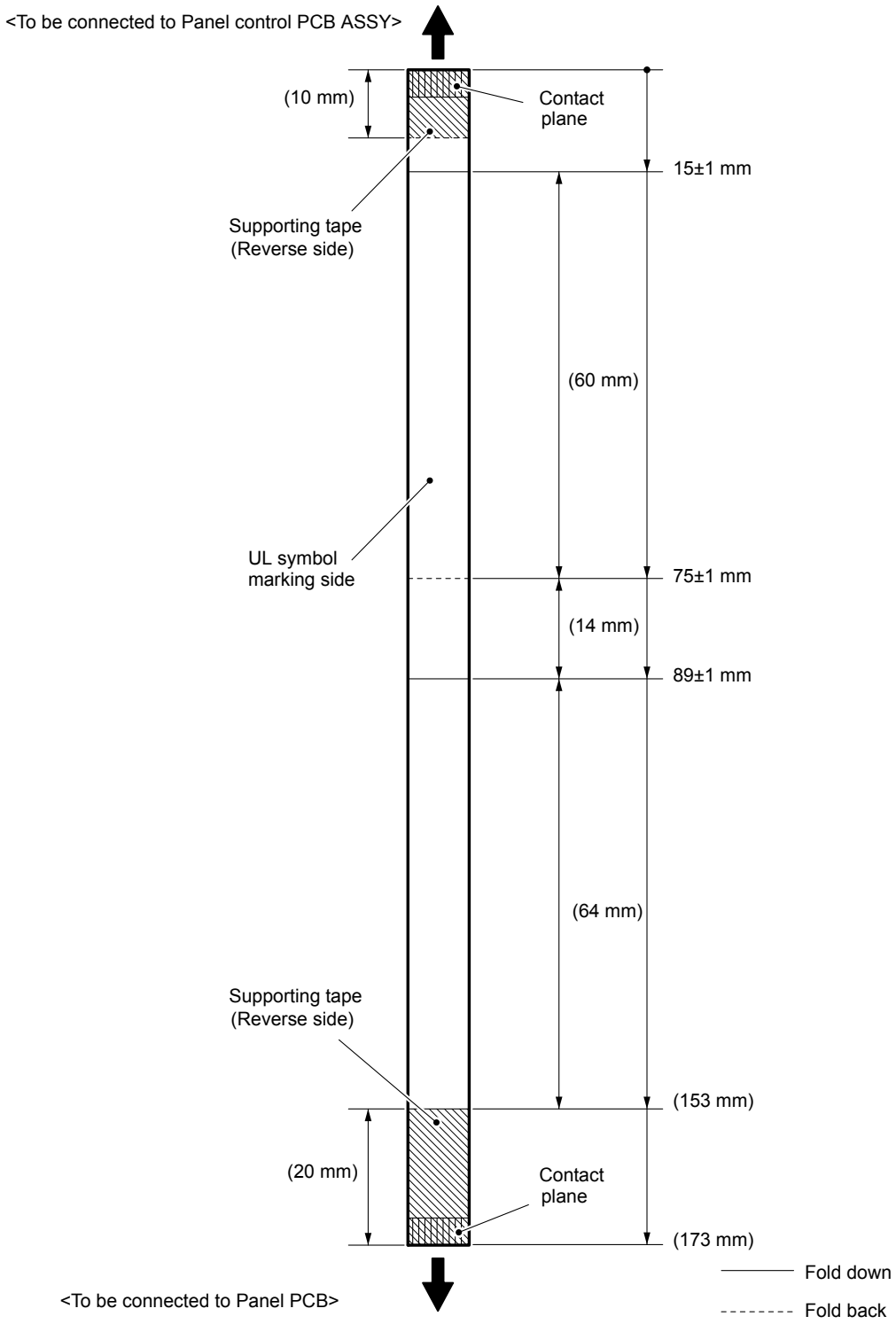

Fig. 3-60

Confidential

(7) Release the two Pins and remove the LCD panel ASSY from the Panel case ASSY.

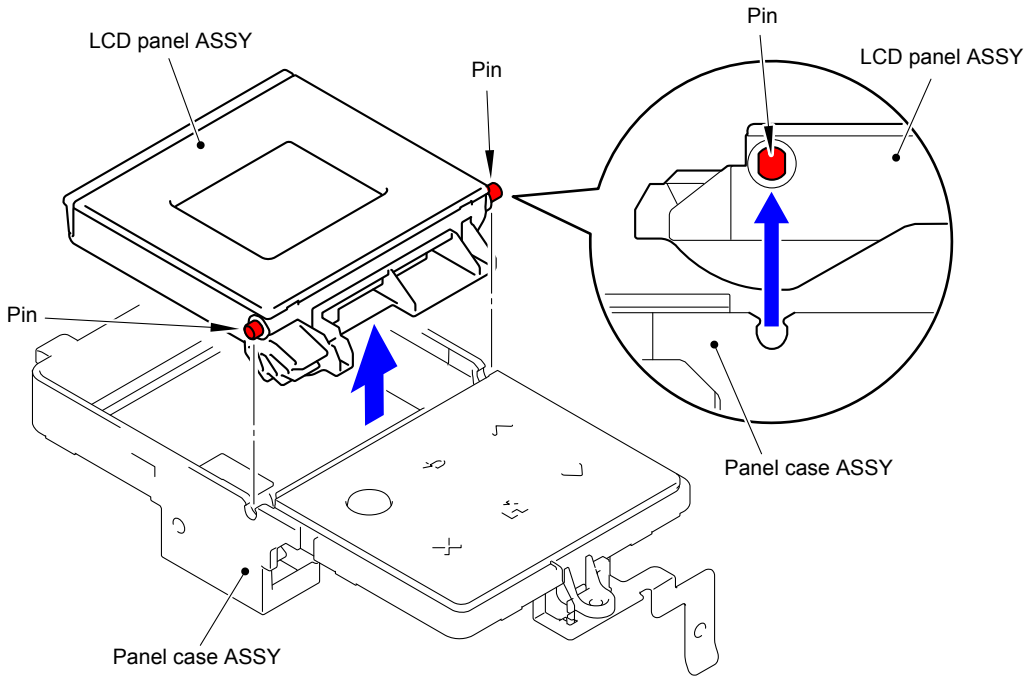

Fig. 3-61

■ **Model without touch panel**

9.16.2 Panel cover ASSY

(1) Remove the two Taptite bind B M4x12 screws from the Panel cover case lower.
(2) Release the three Hooks and remove the Panel cover case lower from the Top cover ASSY.

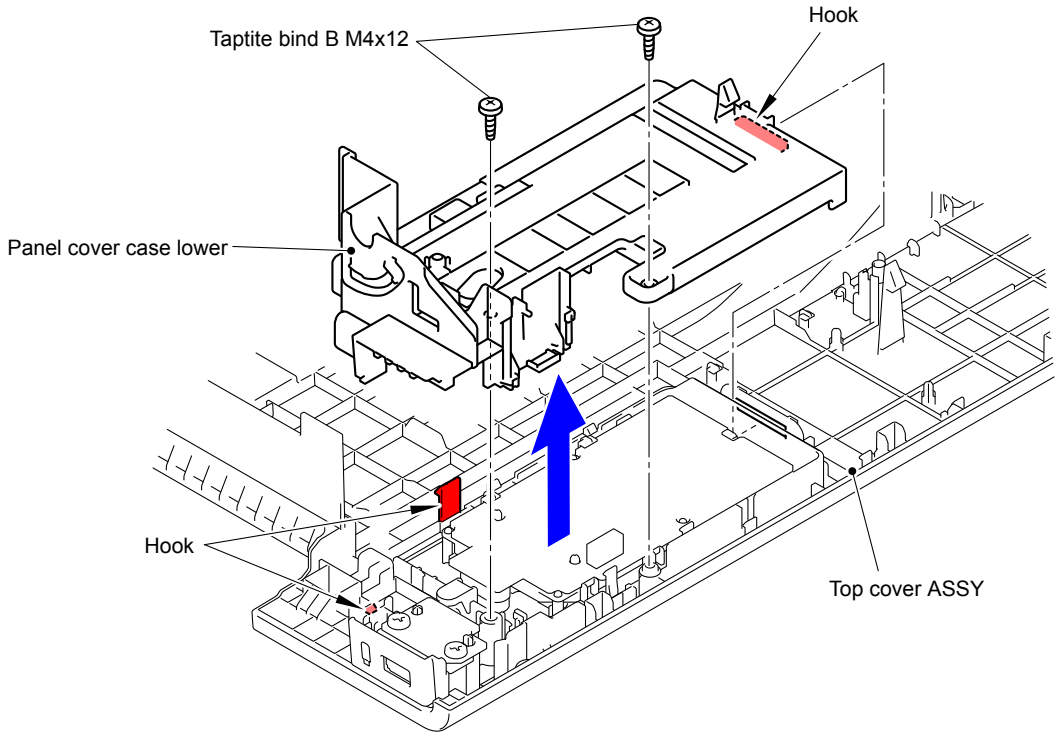

Fig. 3-62

(3) Remove the Taptite cup B M3x10 screw from the Panel cover ASSY.
(4) Release the eight Hooks and remove the Panel cover ASSY from the Top cover ASSY.

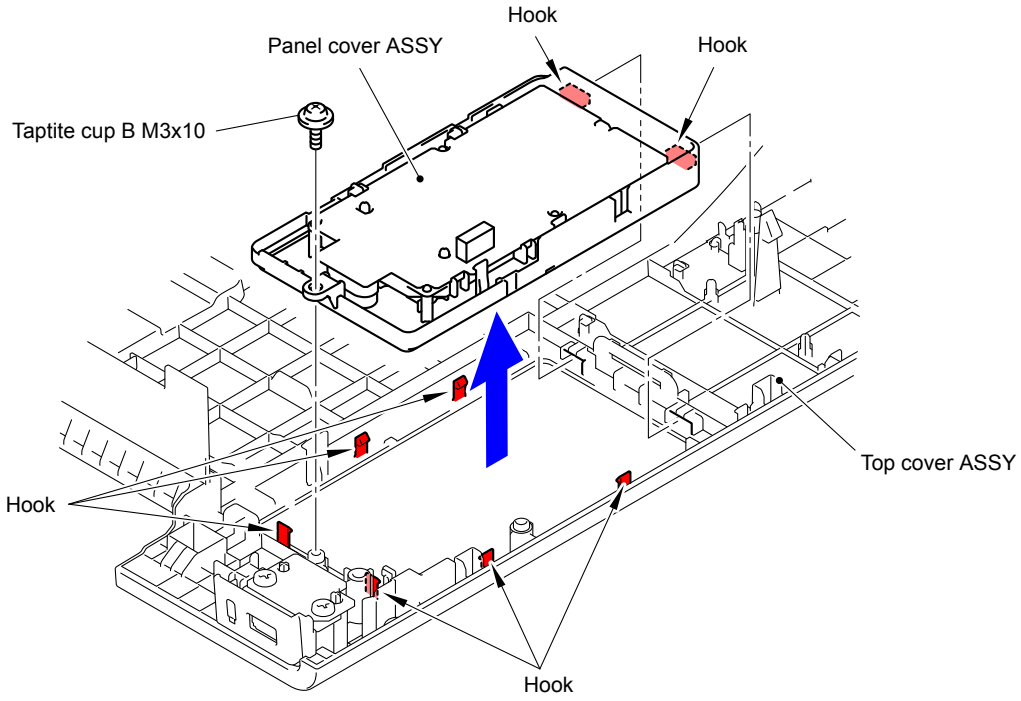

Fig. 3-63

9.16.2.1 Panel PCB ASSY

(1) Release the five Hooks and remove the Panel PCB ASSY from the Panel cover ASSY.

Note:
Be careful not to lose the Panel light guide.

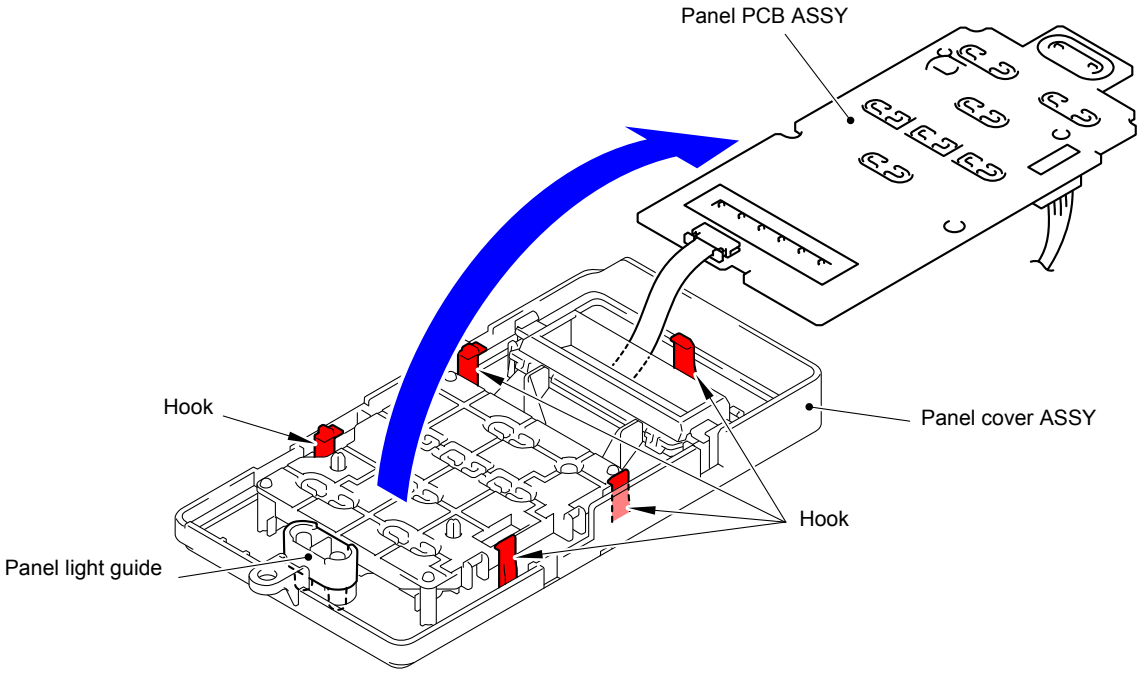

Fig. 3-64

(2) Release the Lock and disconnect the Flat cable of the LCD from the Panel PCB ASSY.

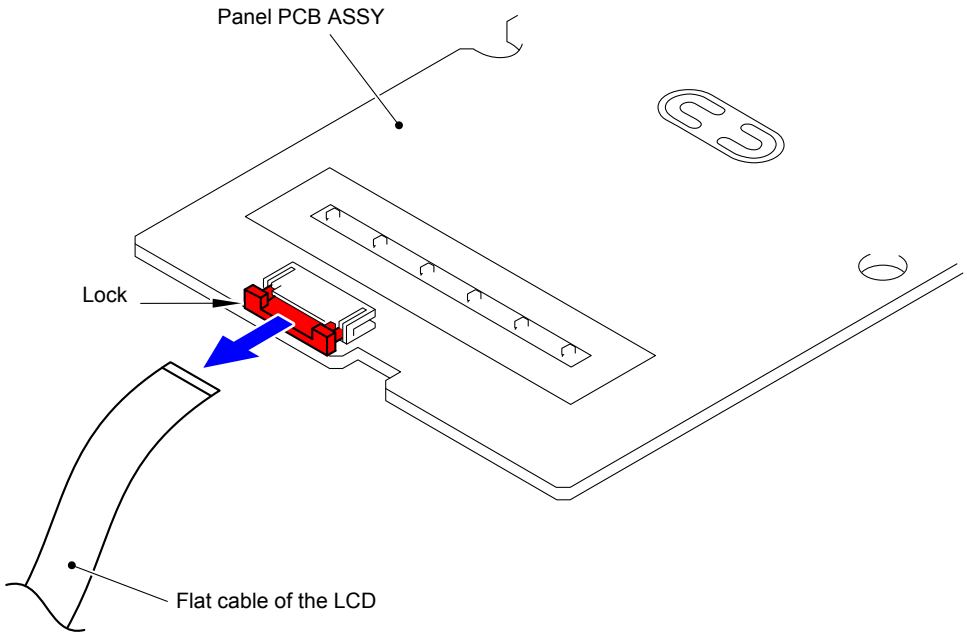

Fig. 3-65

(3) Disconnect the Panel PCB harness ASSY (CN1) from the Panel PCB ASSY.

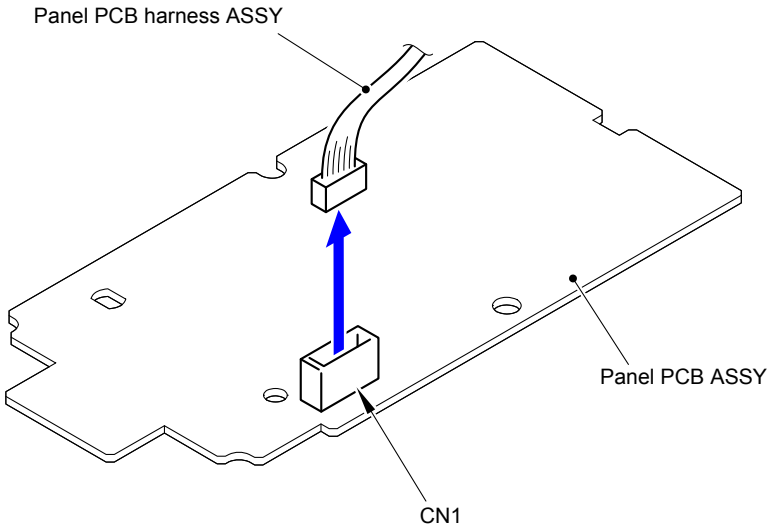

Fig. 3-66

9.16.2.2 Rubber key printed ASSY

(1) Remove the Rubber key printed ASSY from the Panel cover ASSY.

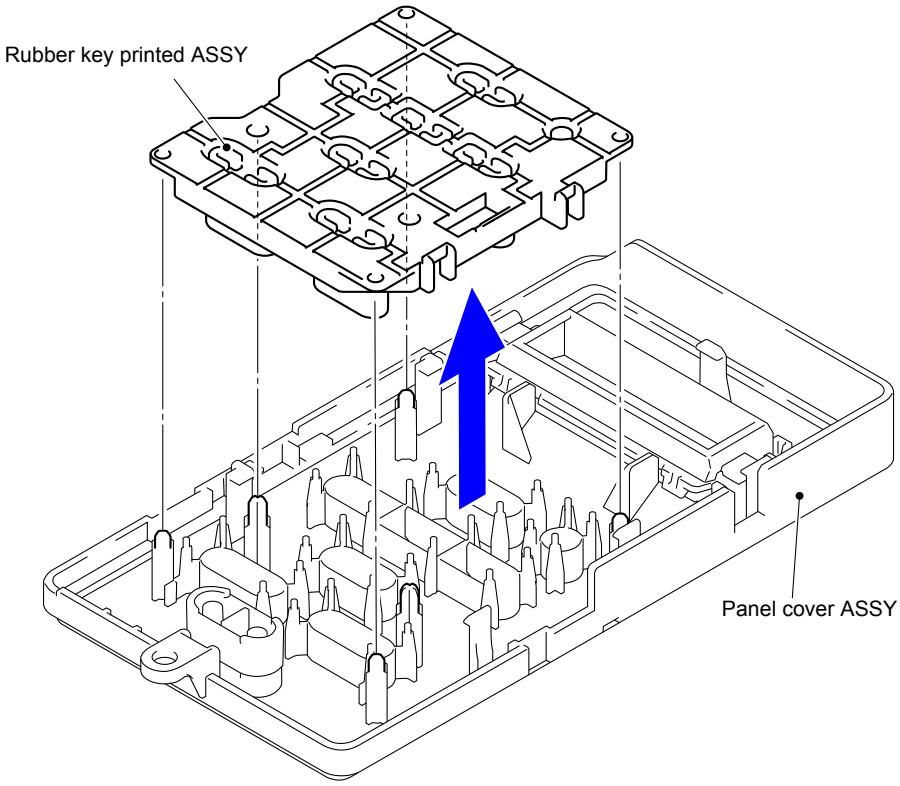

Fig. 3-67

9.16.2.3 LCD

(1) Release the three Hooks and remove the Backlight guide from the Panel cover ASSY.

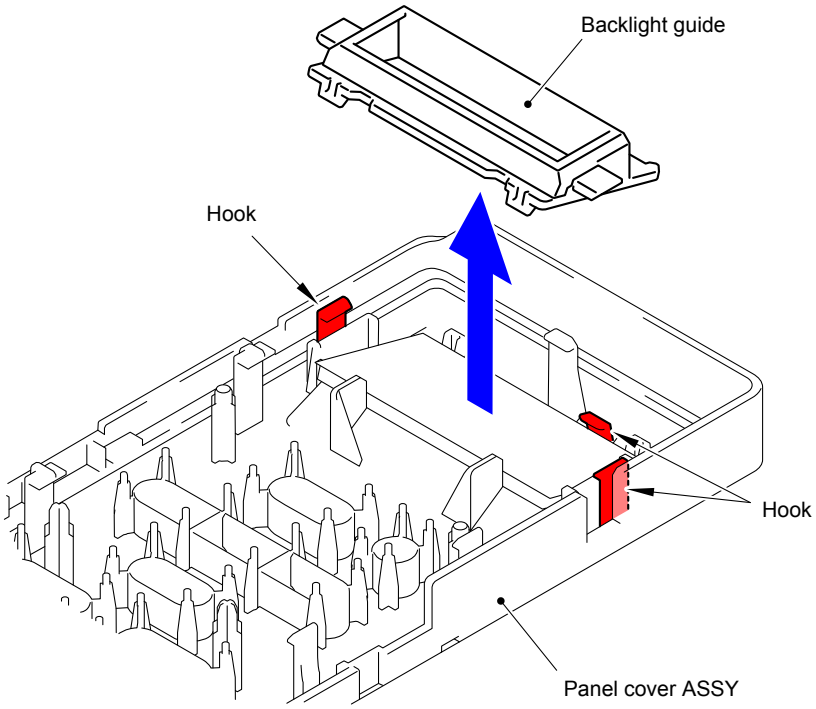

Fig. 3-68

(2) Remove the Diffusion film from the LCD.

(3) Remove the LCD from the Panel cover ASSY.

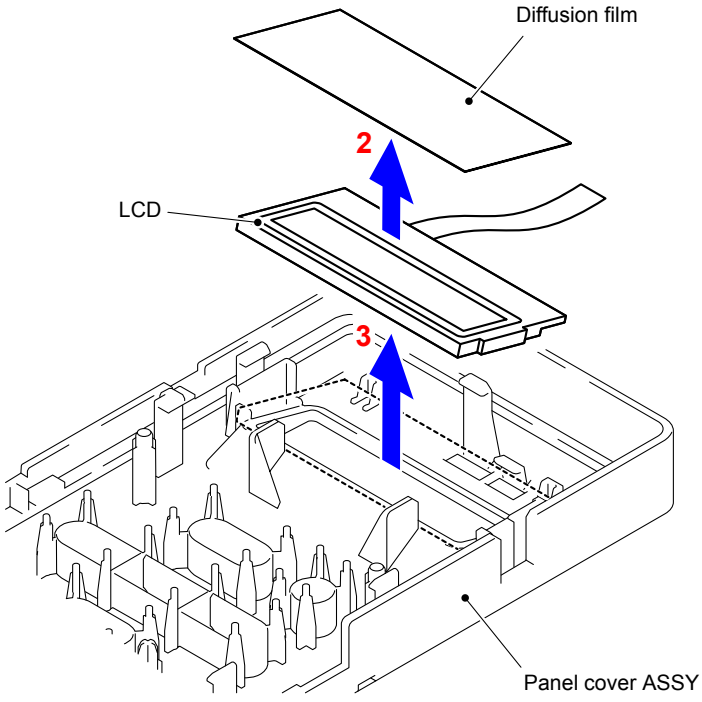

Fig. 3-69

Confidential

9.17 USB Host Relay PCB ASSY/USB Cover Printed ASSY

(1) Remove the two Taptite bind B M4x12 screws and remove the USB host relay PCB ASSY from the USB cover printed ASSY.

(2) Remove the USB cover printed ASSY from the Top cover ASSY.

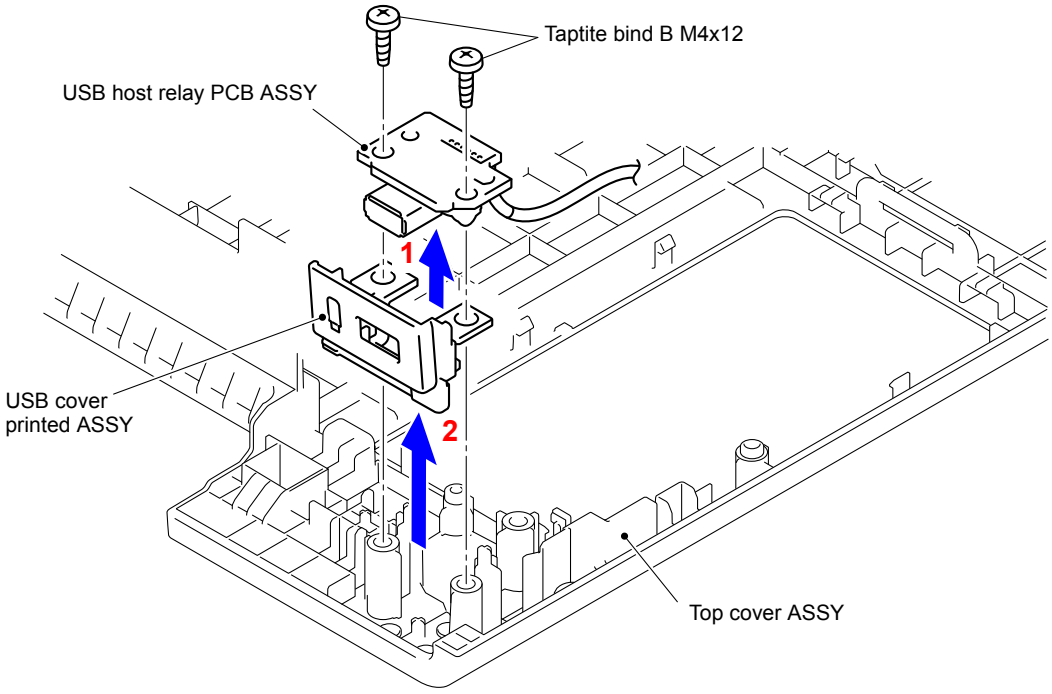

Fig. 3-70

(3) Disconnect the Main USB host harness ASSY from the USB host relay PCB ASSY.

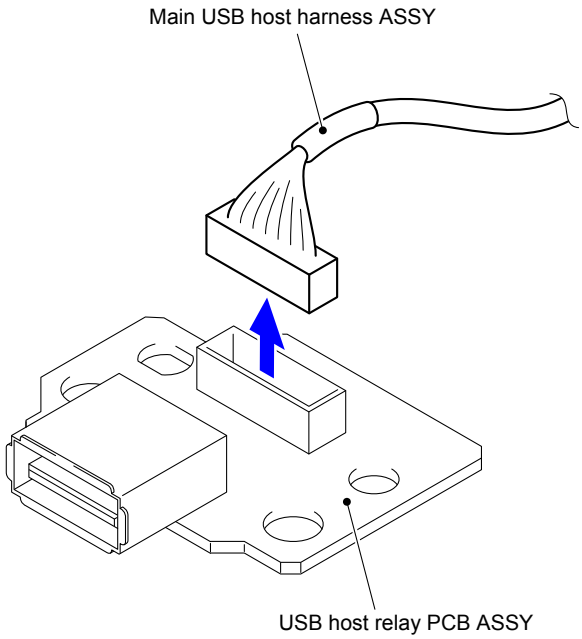

Fig. 3-71

9.18 Main PCB ASSY

Note: Backup of machine information

Before starting disassembly work, back up the machine information and user setting information. (Refer to “1.3.11 Backup of machine information (Function code 41)” in Chapter 5.) After replacing the PCB, restore the backup data to a new PCB.

(1) Disconnect the twenty two Connectors (CN2, CN3, CN4, CN7, CN8, CN9, CN10, CN11, CN12, CN13, CN14, CN21, CN28, CN30, CN31, CN32, CN33, CN36, CN37, CN38, CN39 and CN41) and three Flat cables (CN1, CN17 and CN27) from the Main PCB ASSY.

Note:

- After disconnecting flat cables, check that each cable is not damaged at its end or short-circuited.
- When connecting flat cables, do not insert them at an angle. After insertion, check that the cables are not at an angle.

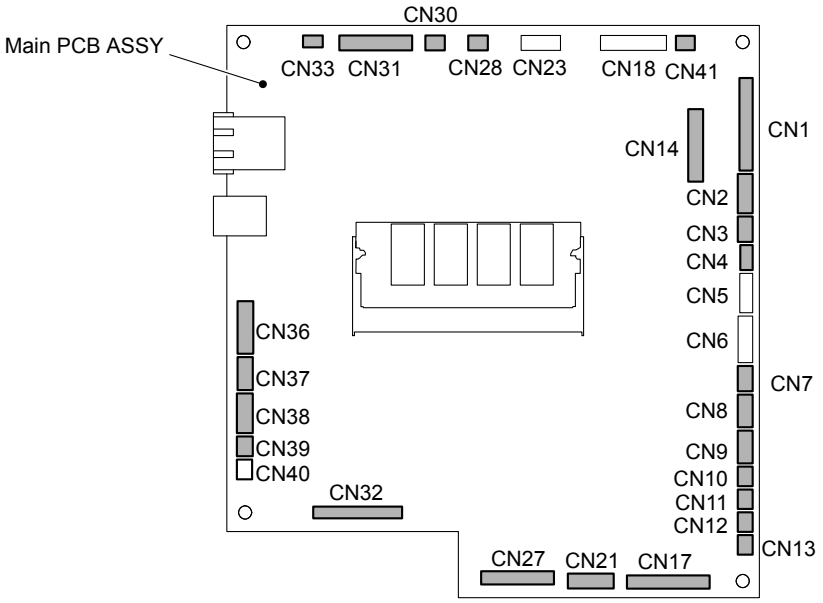

Fig. 3-72

(2) Remove the two Screw bind M3x6 screws and remove the Main PCB ASSY from the Process drive unit.

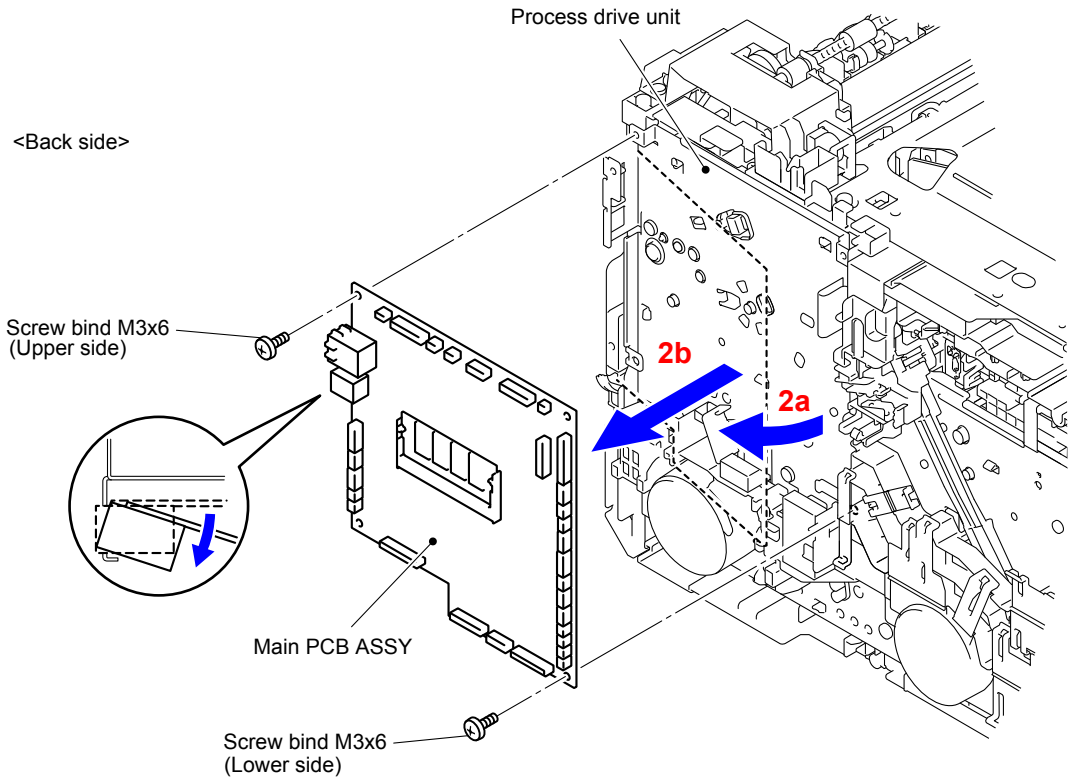

Fig. 3-73

Note:
Note that the tightening torque is different between the upper side and lower side of the Screw bind M3x6.
Upper side: 0.5±0.1 N·m
Lower side: 0.8±0.1 N·m

9.19 Laser Unit Flat Cable/Laser Unit

(1) Remove the six Taptite bind B M4x12 screws and four Taptite cup S M3x6 SR screws, and remove the Scanner cover plate from the Main body.

Assembling Note:
When assembling the six screws of the Taptite bind B M4x12, be sure to assemble them in the order shown in the figure.

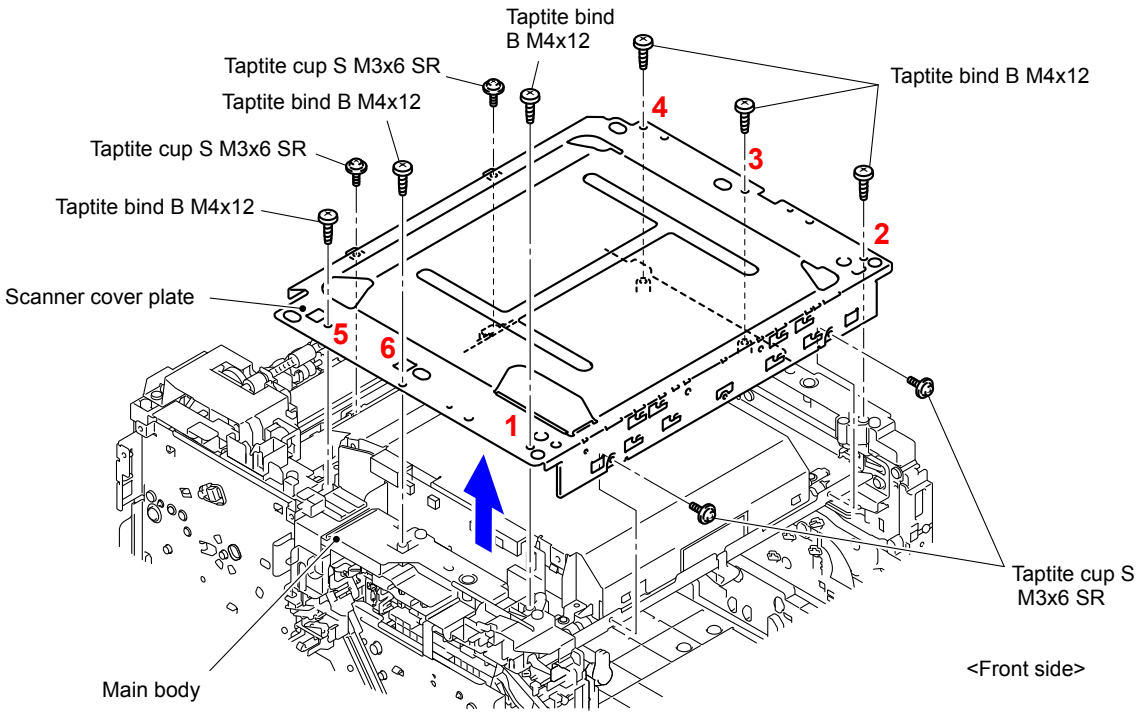

Fig. 3-74

(2) Disconnect the Laser unit flat cable from the Laser unit and release the wiring.

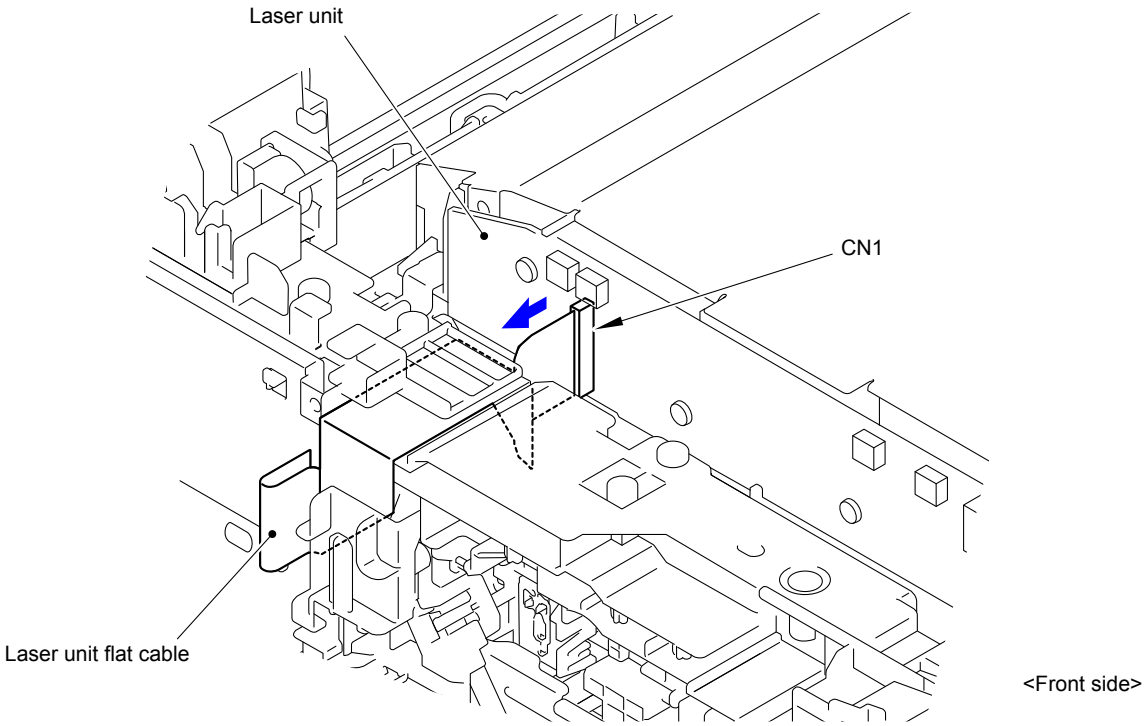

Fig. 3-75

Harness routing: Refer to " 2 Laser Unit"

Note:

- After disconnecting flat cables, check that each cable is not damaged at its end or short-circuited.
- When connecting flat cables, do not insert them at an angle. After insertion, check that the cables are not at an angle.

<How to fold the Laser unit flat cable>

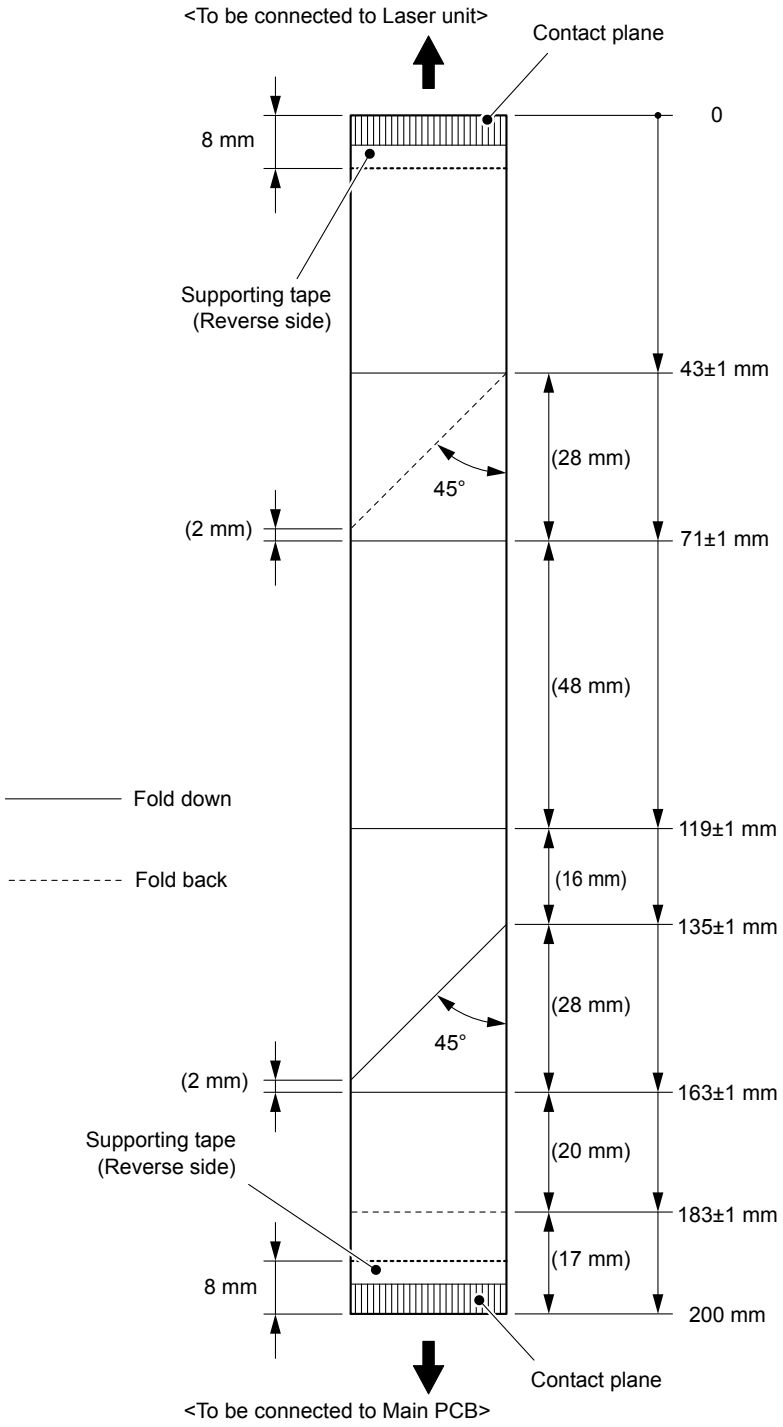

Fig. 3-76

Confidential

(3) Remove the five Taptite cup S M3x6 SR screws and remove the four Scanner holders from the Scanner plate.

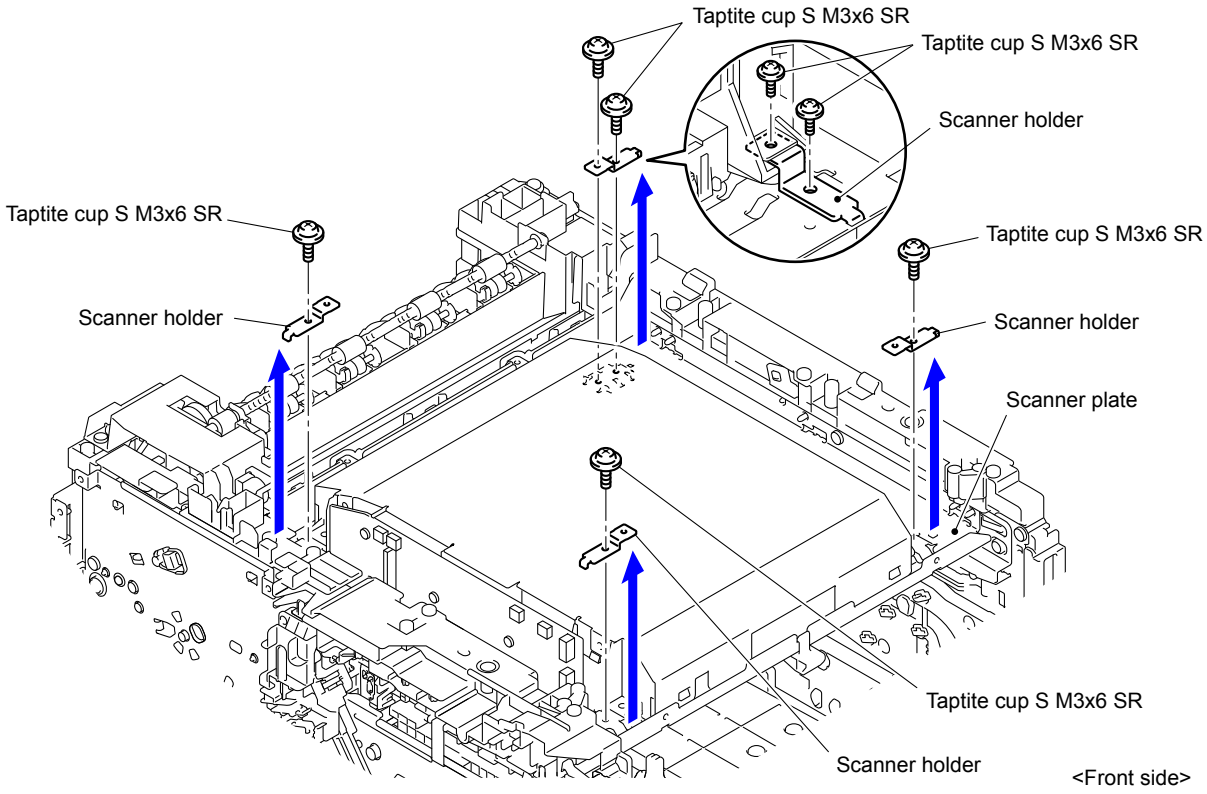

Fig. 3-77

Assembling Note:

- When assembling the Scanner holder to “A” of the Laser unit, be sure to use the Scanner holder of which “B” is a screw and not to use other Scanner holders.
- When assembling the Scanner holder to “A” of the Laser unit, be sure that the Scanner holder is placed as shown in the figure.

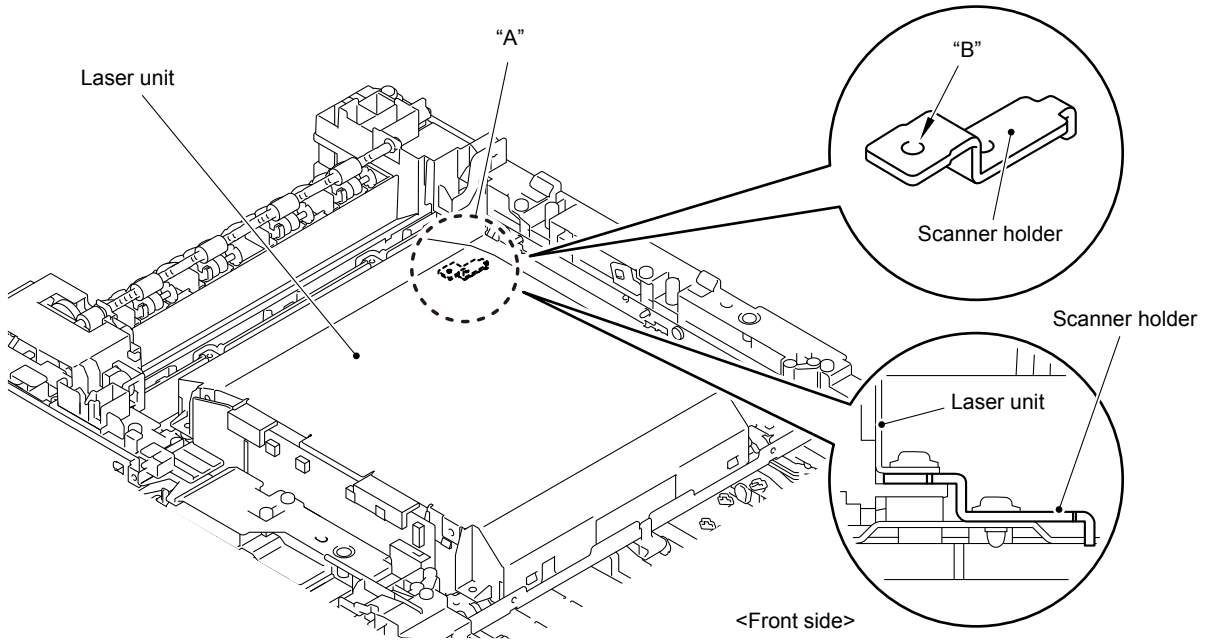

Fig. 3-78

(4) Disconnect the Connector (CN8).

(5) Remove the Laser unit from the Scanner plate.

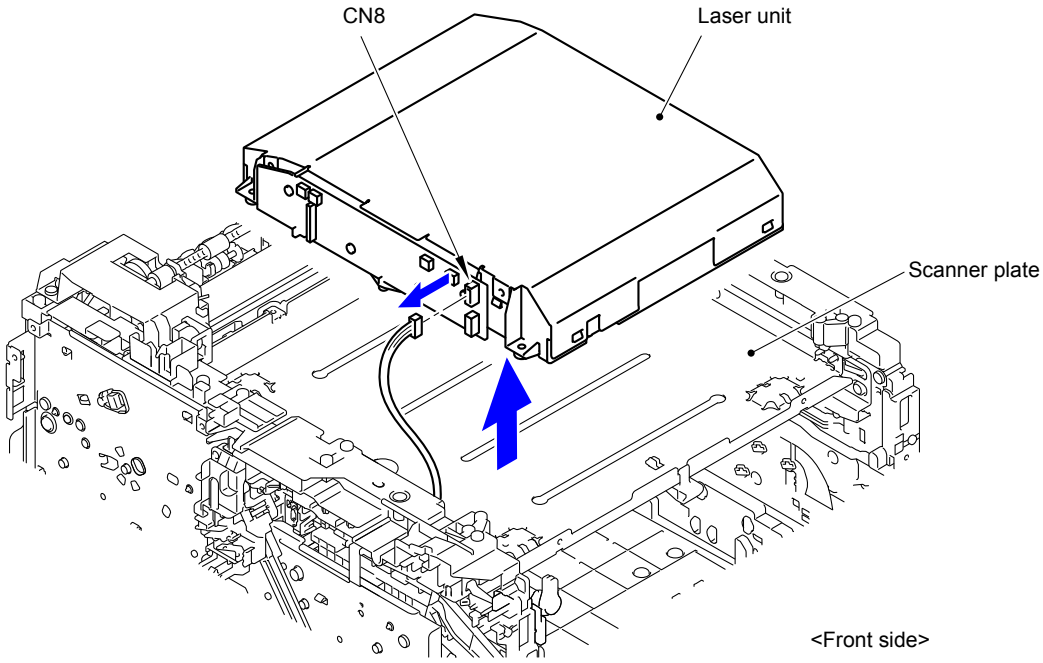

Fig. 3-79

9.20 Front Cover Sensor

(1) Release the wiring of the Front cover sensor.

(2) Release the two Hooks and remove the Front cover sensor from the Main body.

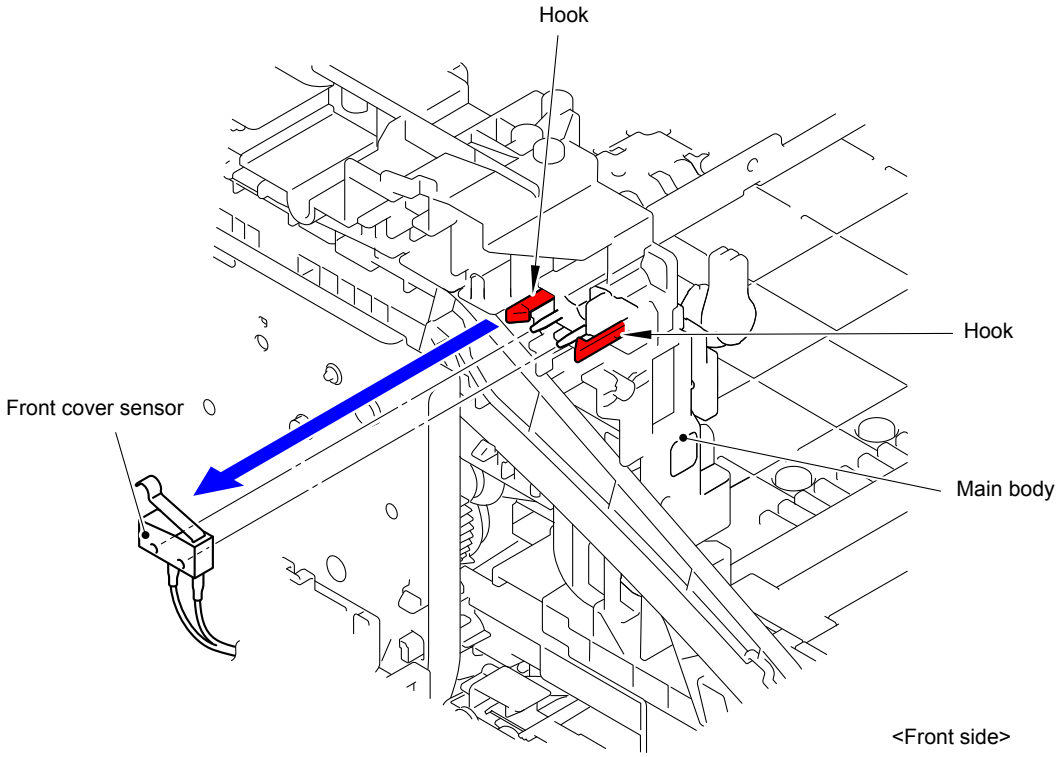

Fig. 3-80

Harness routing: Refer to " 3 Process Drive Unit, Front Cover Sensor, Main Drive Unit"

9.21 Process Drive Unit/Fuser Drive Gear Z25

(1) Release all the wiring from the Wireless LAN cable rack.
(2) Release the three Hooks and remove the Wireless LAN cable rack from the Main body.

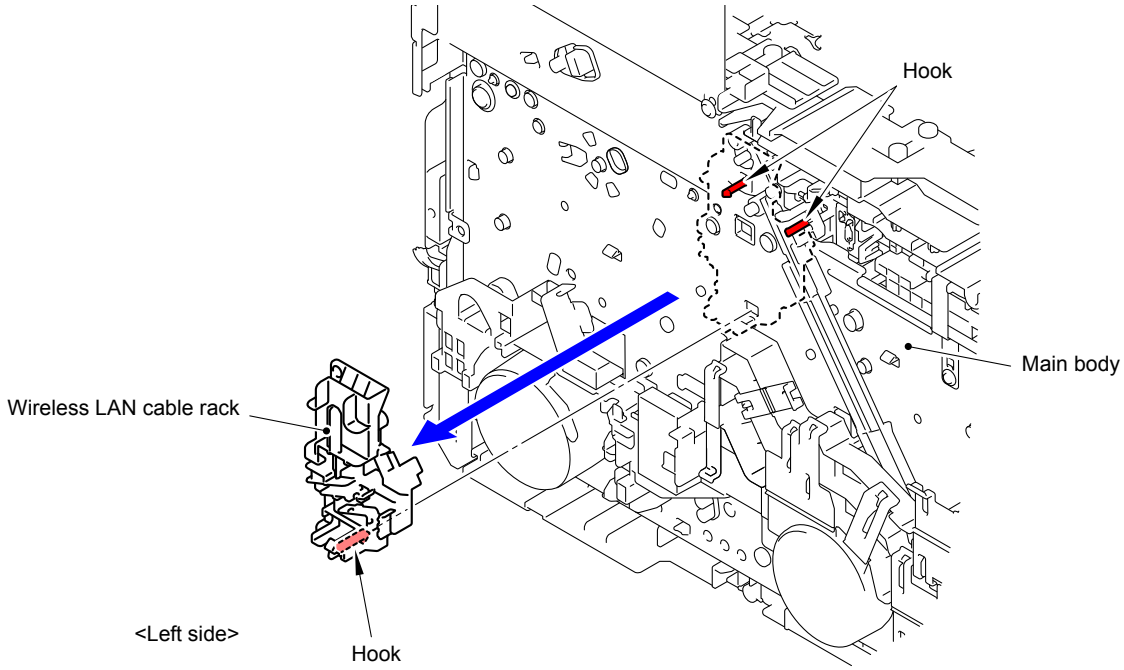

Fig. 3-81

(3) Release the wiring of the Polygon motor harness.
(4) Remove the two Taptite cup S M3x8 SR screws and remove the Side ground plate L from the Main body.

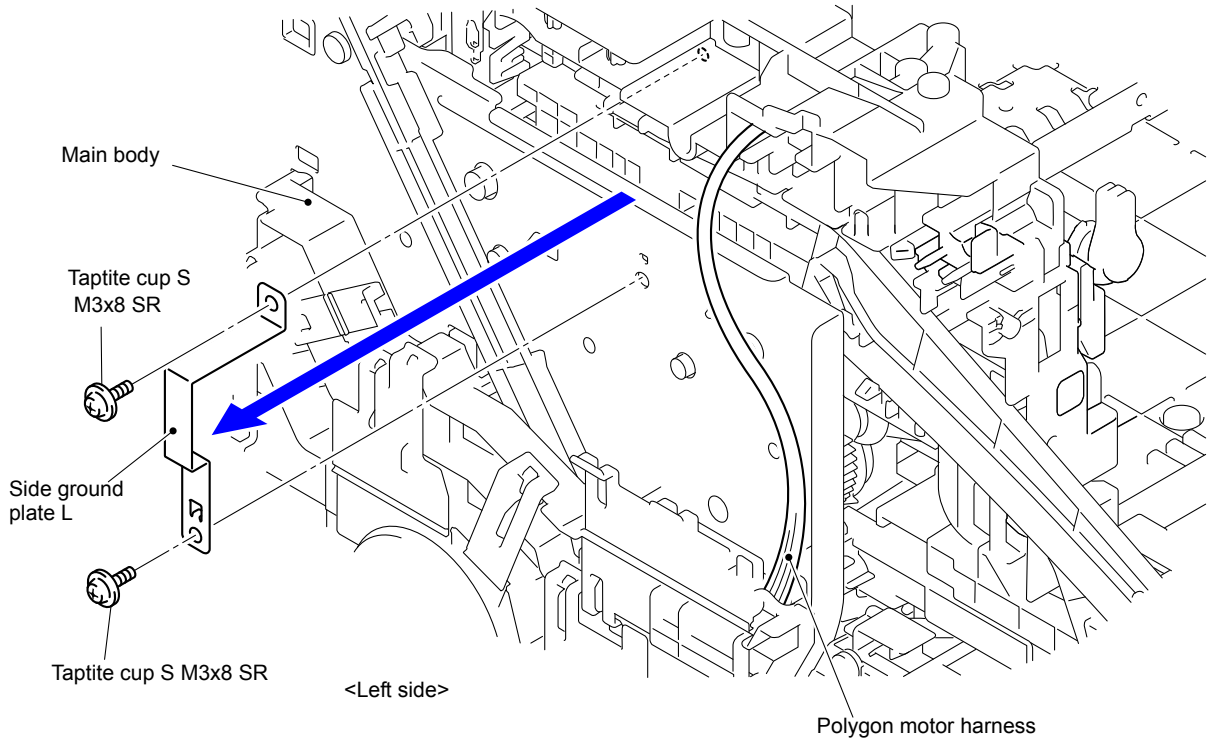

Fig. 3-82

Confidential

(5) Remove the two Screw bind M3x8 screws from the Main PCB plate.
Release the two Hooks and remove the Main PCB plate from the Main body.

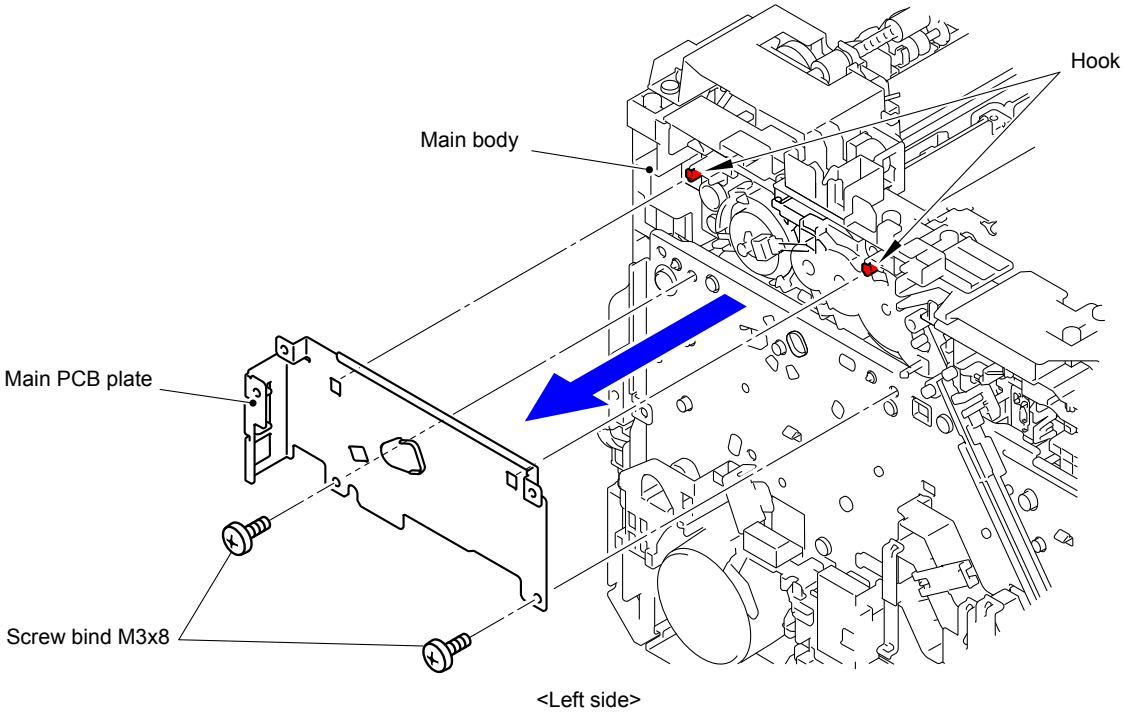

Fig. 3-83

(6) Release all the wiring from the PF cable rack.
(7) Remove the Taptite cup S M3x8 SR screw from the PF cable rack. Release the six Hooks and slide the PF cable rack in the direction of the arrow and remove it from the Main body.

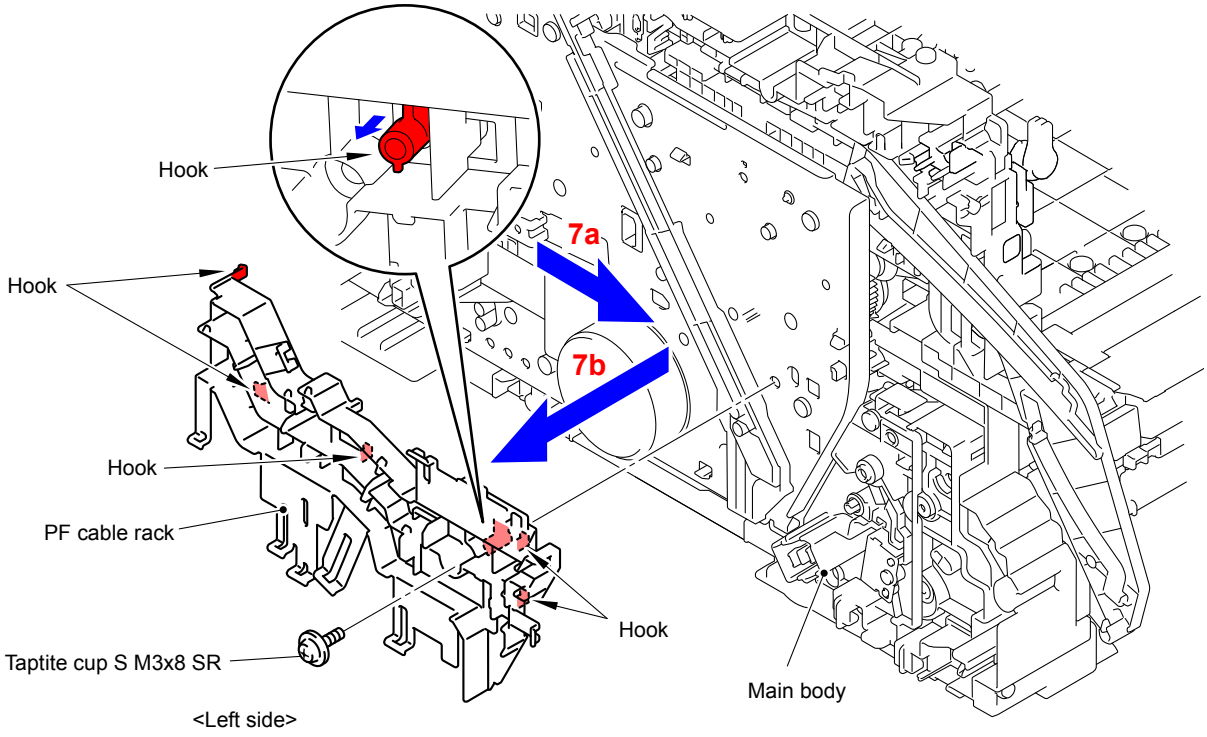

Fig. 3-84

(8) Remove the Mono color cam from the Main body.

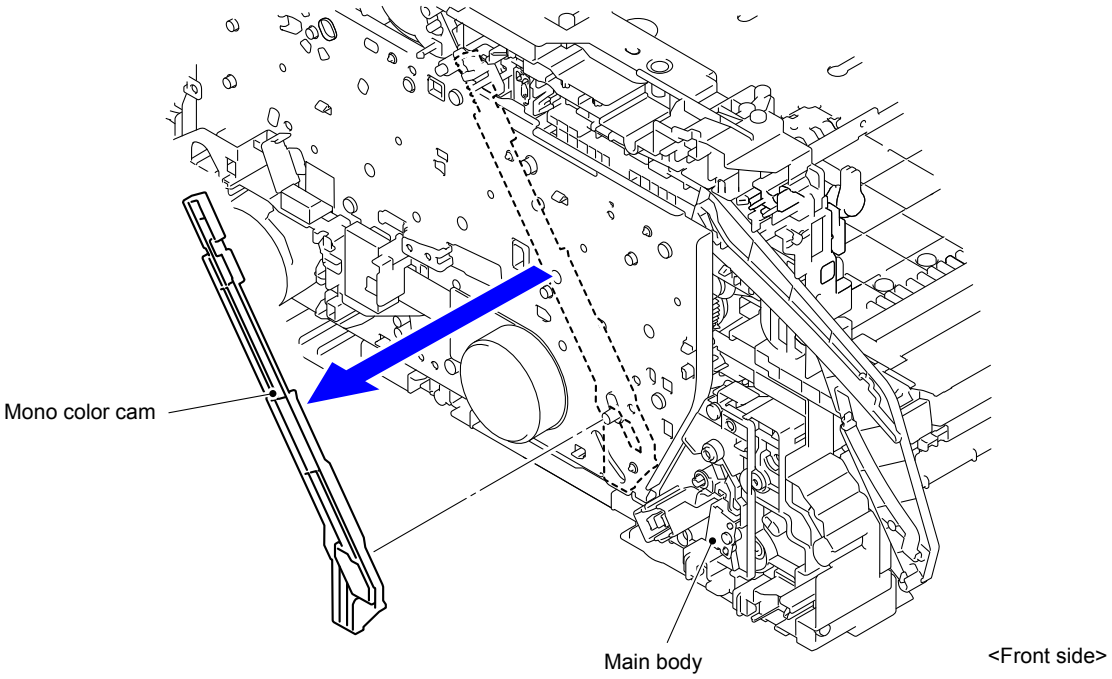

Fig. 3-85

Assembling Note:

When assembling the Mono color cam, be sure to check that the Forced develop release link is at “A” position. If you attach the Mono color cam as the Forced develop release link is at “B” position, the Mono color cam may be damaged.

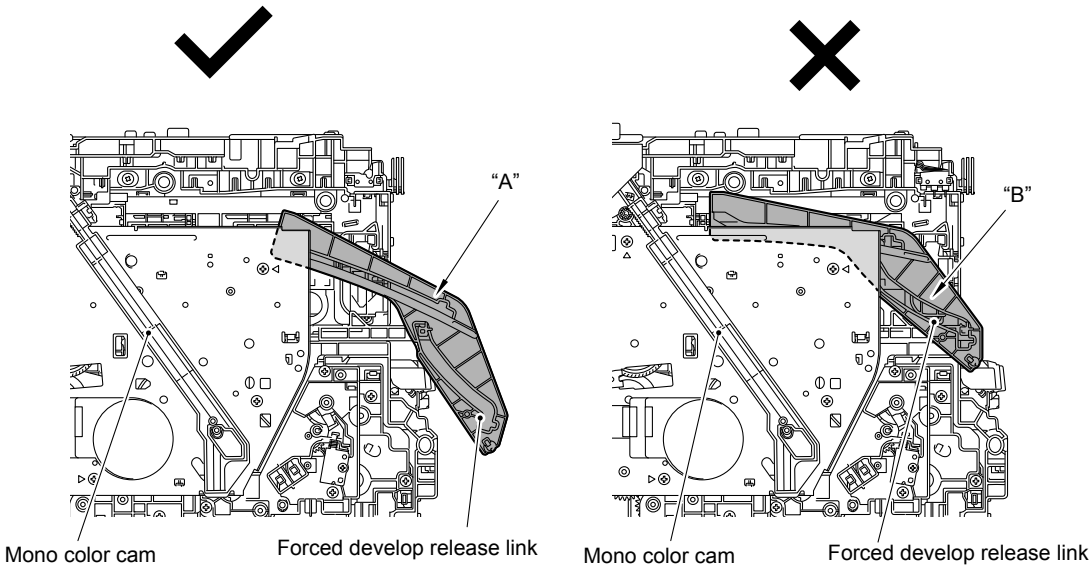

Fig. 3-86

(9) Release all the wiring from the Cable rack.

(10) Release the six Hooks and slide the Cable rack in the direction of the arrow and remove it from the Main body.

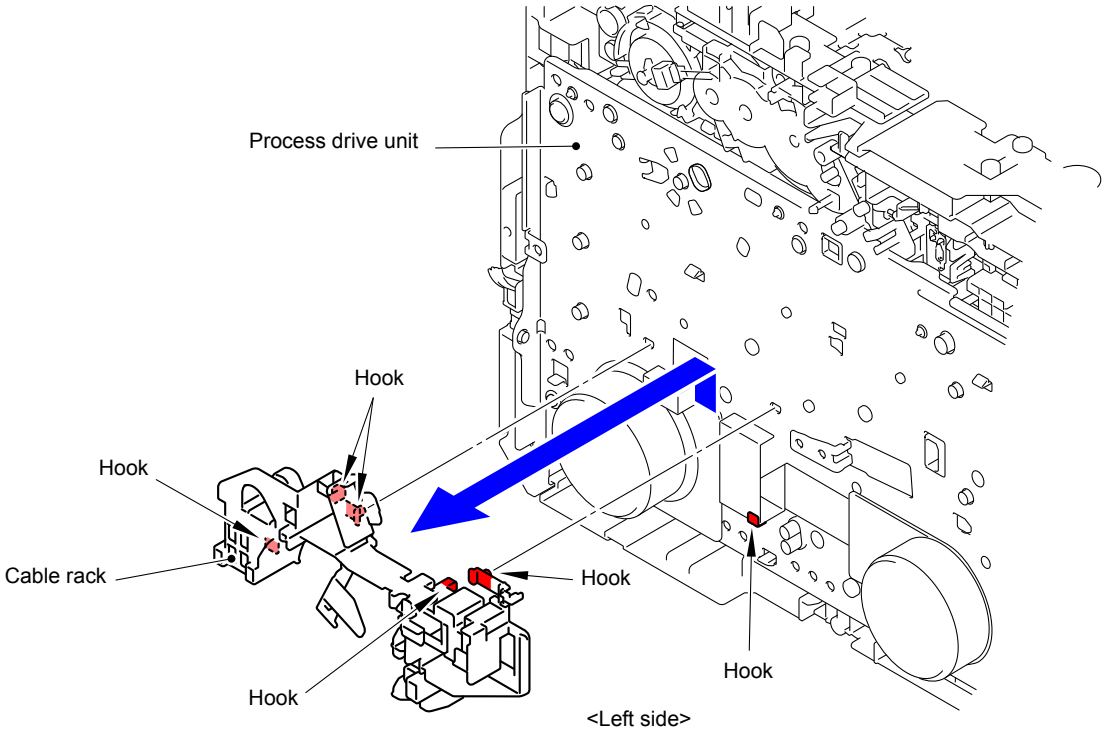

Fig. 3-87

(11) Remove the Taptite cup S M3x8 SR screw and fasten the Under bar ground spring to the Rib of the Main body.

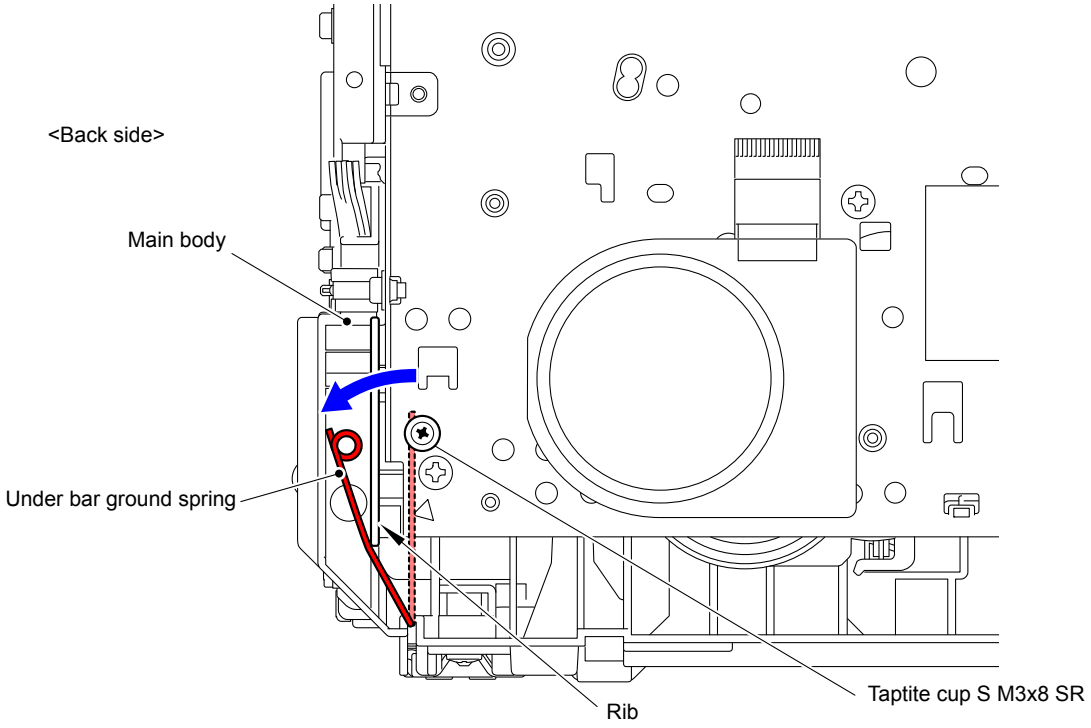

Fig. 3-88

(12) Remove the five Taptite bind B M4x12 screws, one Taptite pan (washer) B M4x12 DA screw, and the one Screw pan (S/P washer) M3.5x6 screw from the Process drive unit. Release the two Hooks and remove the Process drive unit from the Main body.

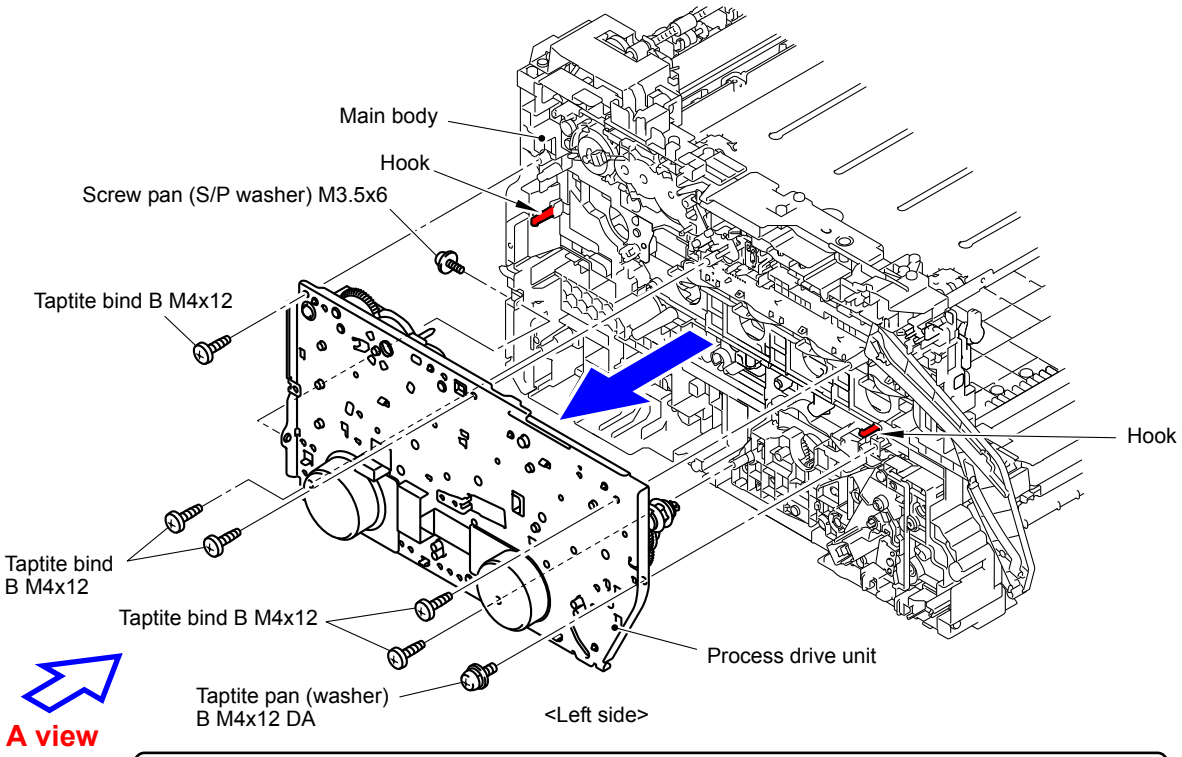

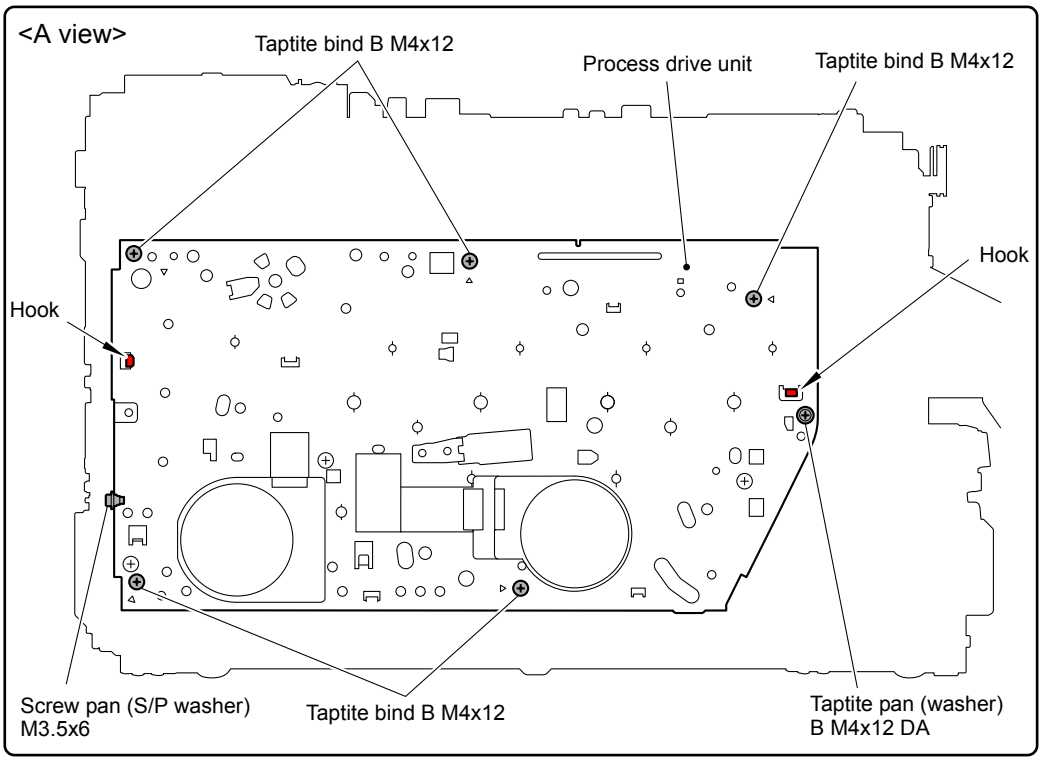

Fig. 3-89

(13) Release the Hook and remove the Fuser drive gear Z25 from the Process drive unit.

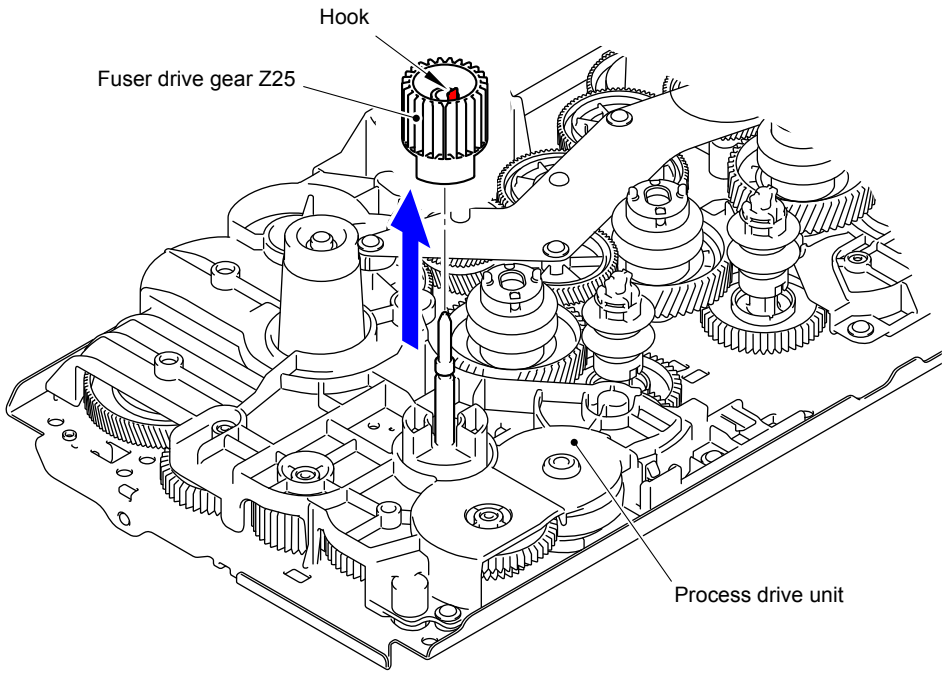

Fig. 3-90

Harness routing: Refer to “ 2 Laser Unit”, “ 3 Process Drive Unit, Front Cover Sensor, Main Drive Unit”, “ 4 Develop Release Drive Unit, Develop Release Sensor PCB ASSY, Toner/New Sensor PCB ASSY”, “ 11 MP Paper Empty/Registration Front Sensor PCB ASSY”, “ 12 Paper Feed Unit”

9.22 Main Drive Unit

(1) Release all the wiring from the Main drive unit.
(2) Remove the four Taptite bind B M4x12 screws from the Main drive unit. Release the Hook and remove the Main drive unit from the Main body.

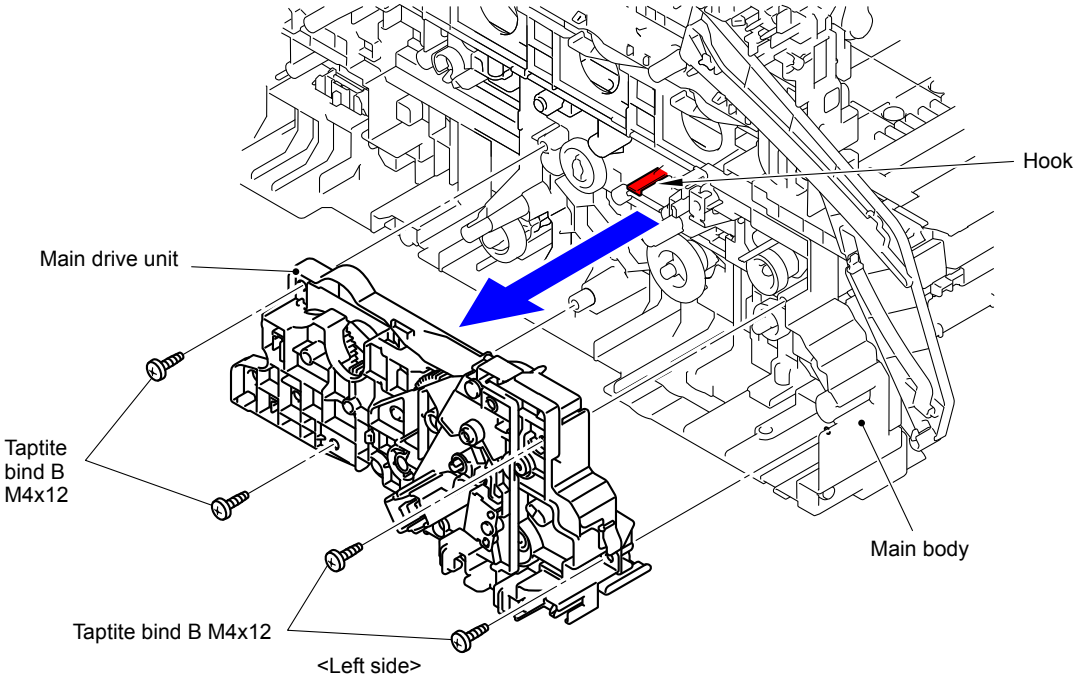

Fig. 3-91

Note:
As the DX drive gear Z15-23, Cleaner drive gear Z30, Registration gear Z26-23, PF drive gear 21, PF drive joint, Pinch roller drive gear Z21M05, Registration roller drive joint, and PP gear 14 55 tend to come off, be careful not to lose them.

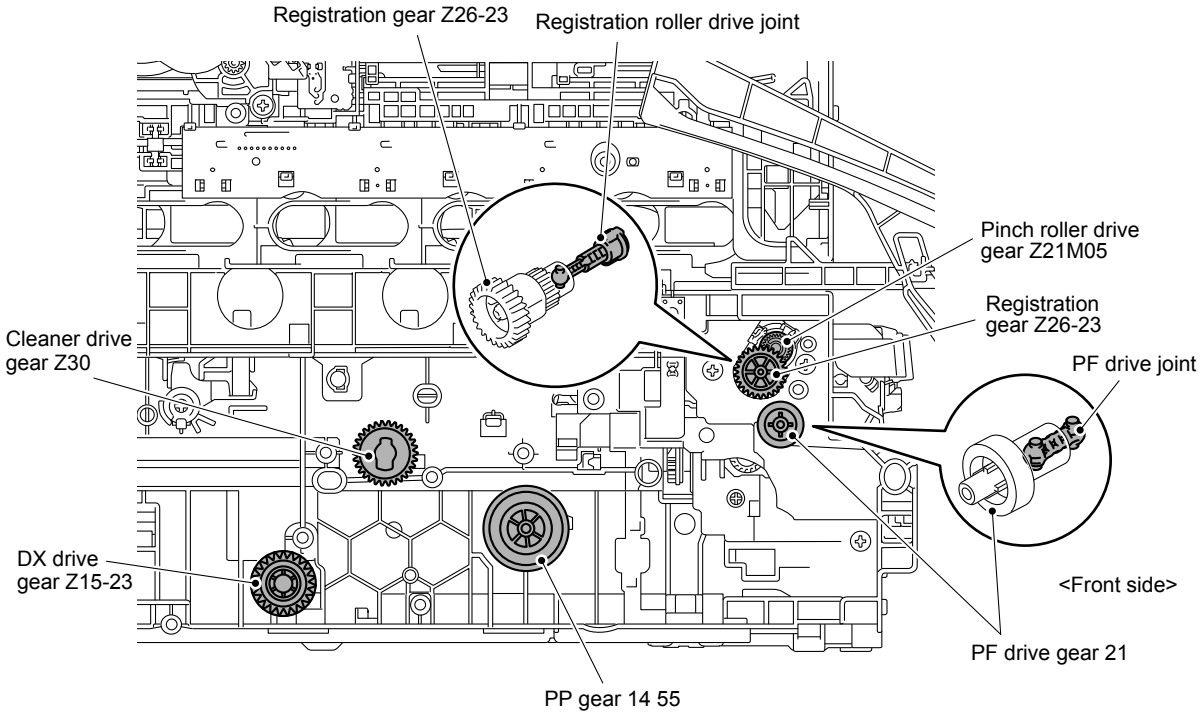

Fig. 3-92

Harness routing: Refer to " 3 Process Drive Unit, Front Cover Sensor, Main Drive Unit"

9.23 Develop Release Drive Unit

(1) Release the wiring of the Develop release drive unit.

(2) Remove the three Taptite bind B M4x12 screws from the Develop release drive unit. Release the three Hooks and remove the Develop release drive unit from the Main body.

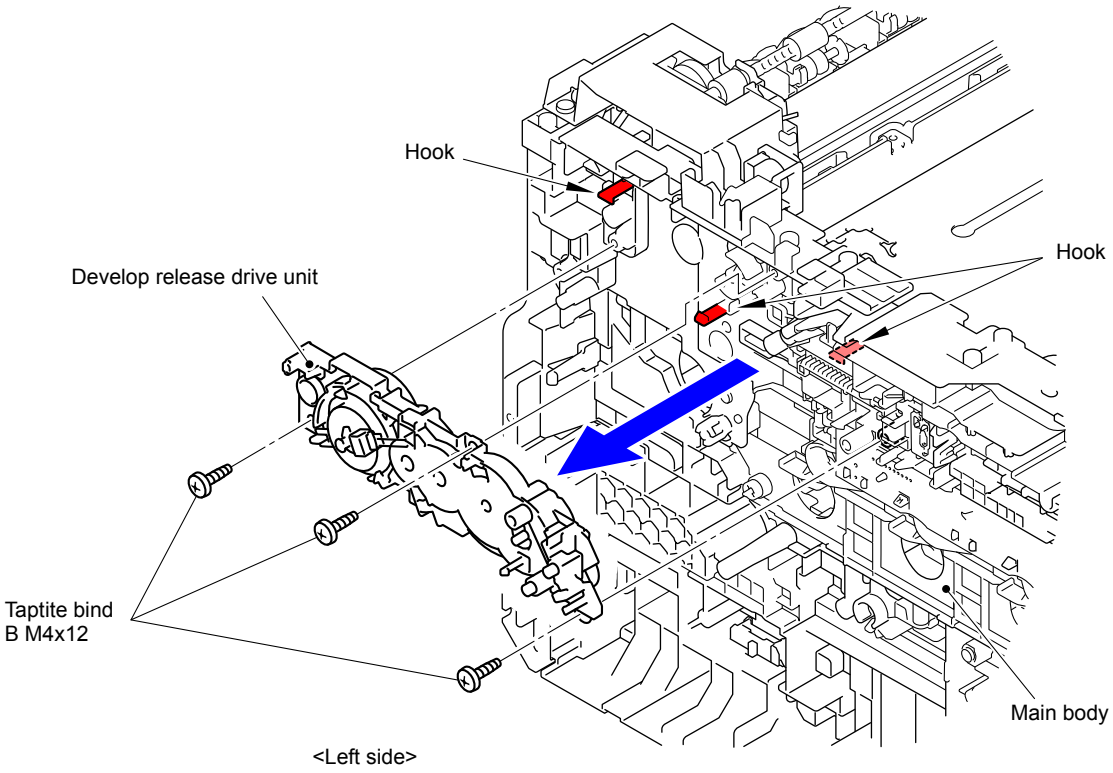

Fig. 3-93

Harness routing: Refer to " 4 Develop Release Drive Unit, Develop Release Sensor PCB ASSY, Toner/New Sensor PCB ASSY"

9.24 Develop Release Sensor PCB ASSY

(1) Release the Hook and remove the Develop release sensor PCB ASSY from the Main body.

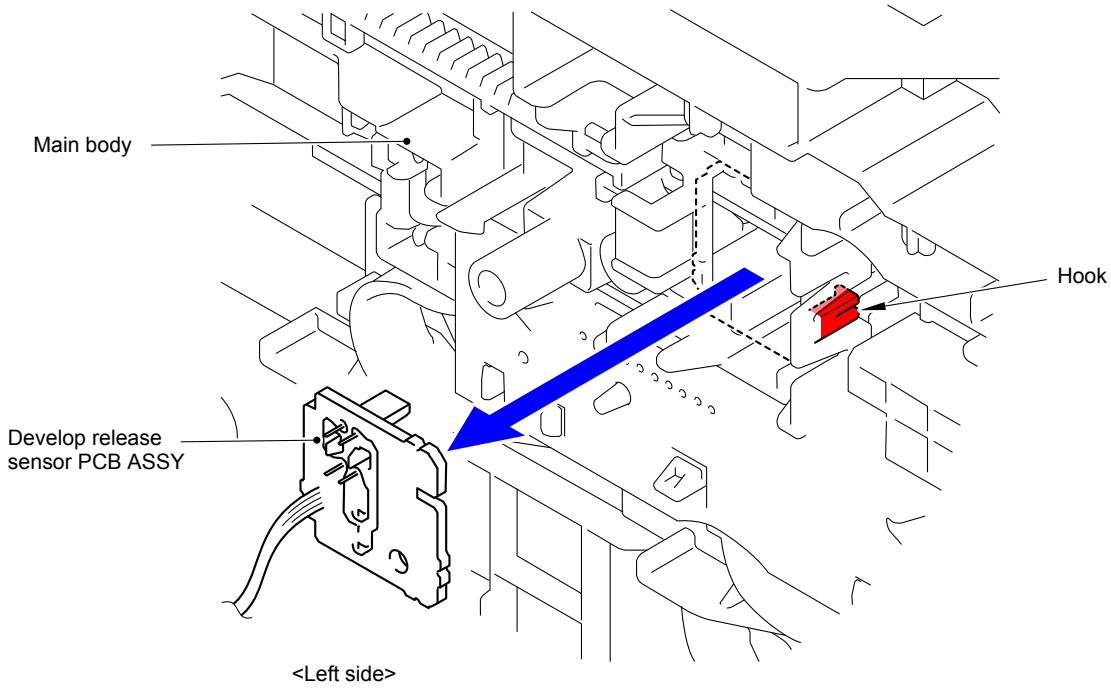

Fig. 3-94

9.25 Toner/New Sensor PCB ASSY

(1) Release the two Hooks and remove the Forced develop release link from the Main body.

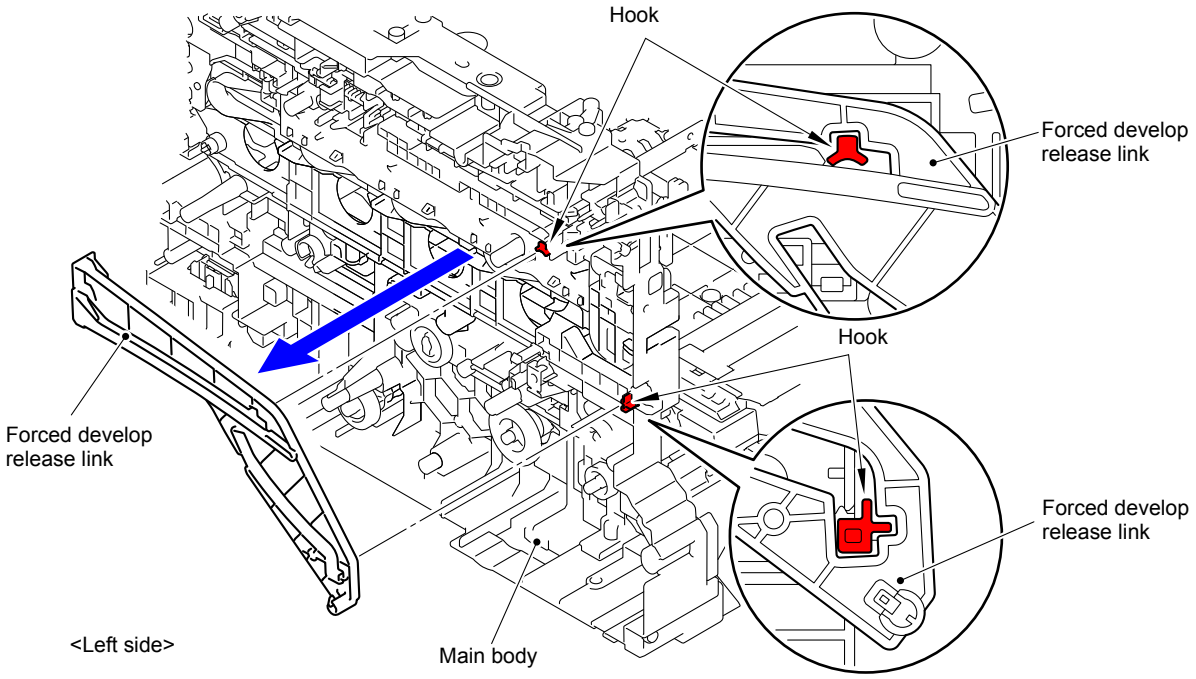

Fig. 3-95

(2) Release the six Hooks and remove the Toner/new sensor PCB ASSY from the Main body.

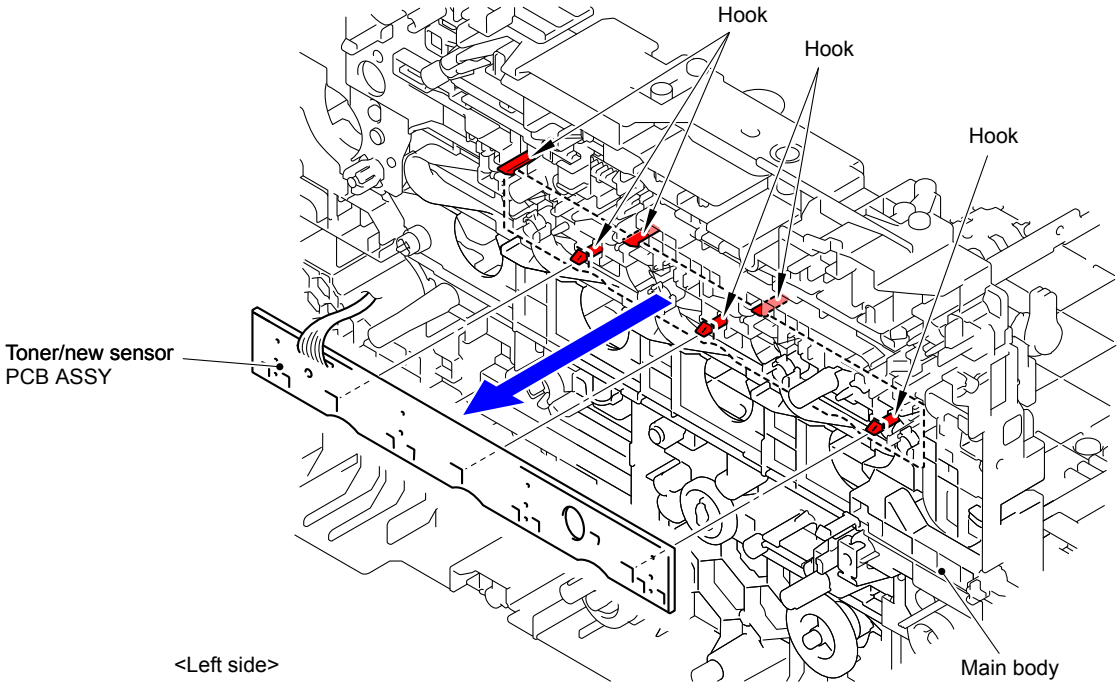

Fig. 3-96

9.26 Fuser Fan

(1) Disconnect the Connector (CN4) from the High-voltage power supply PCB ASSY.

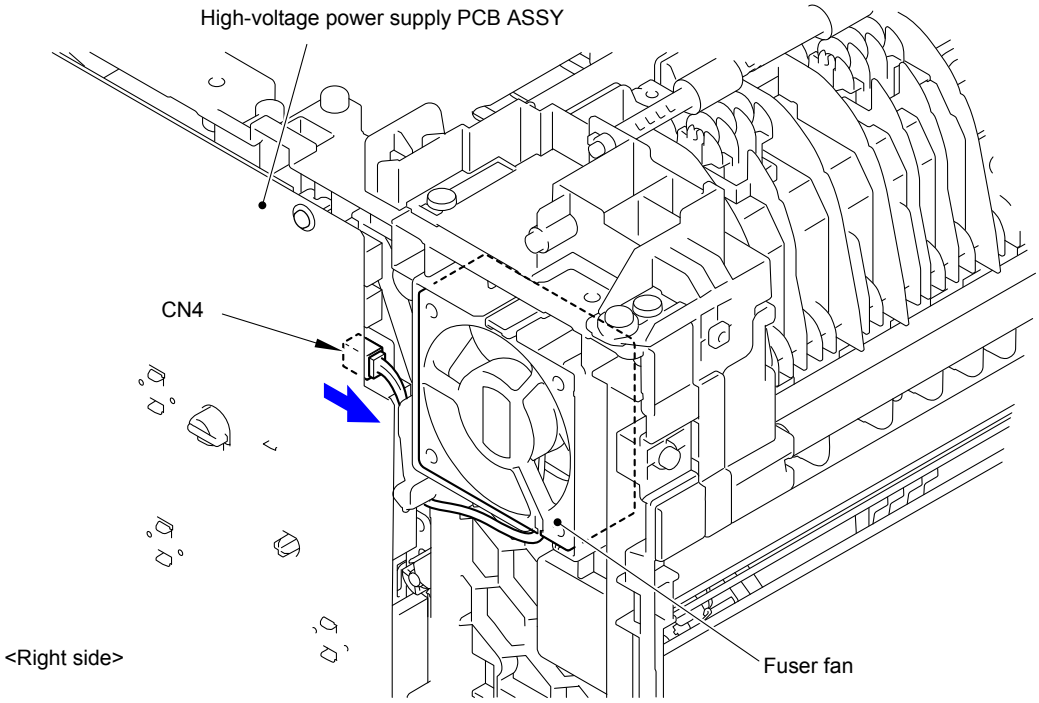

Fig. 3-97

(2) Slightly rotate the Fuser fan in the direction of the arrow 2a and pull it out from the Main body.

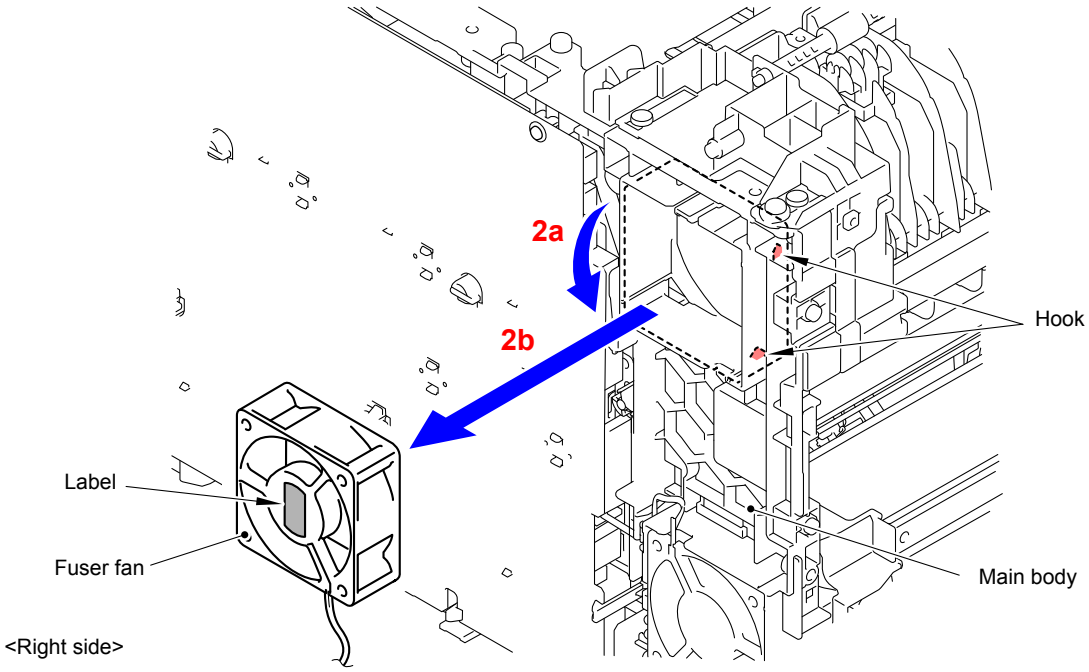

Fig. 3-98

Assembling Note:

When assembling the Fuser fan, be sure to assemble it in a way that the label side faces out.

Harness routing: Refer to " 9 Fuser Fan, Power Fan"

9.27 Paper Eject ASSY

(1) Disconnect the two Connectors (CN1 and CN2) from the High-voltage power supply PCB ASSY.
(2) Release the wiring of the High-voltage main harness ASSY.

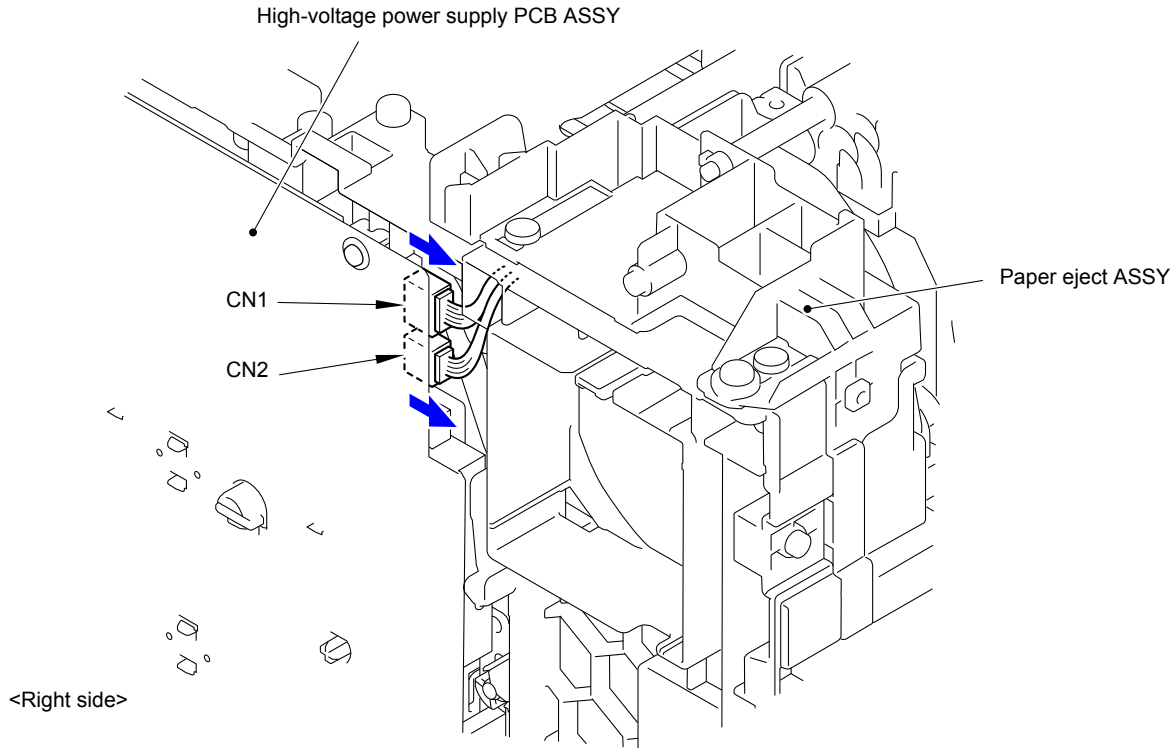

Fig. 3-99

(3) Remove the four Taptite bind B M4x12 screws and remove the Paper eject ASSY from the Main body.

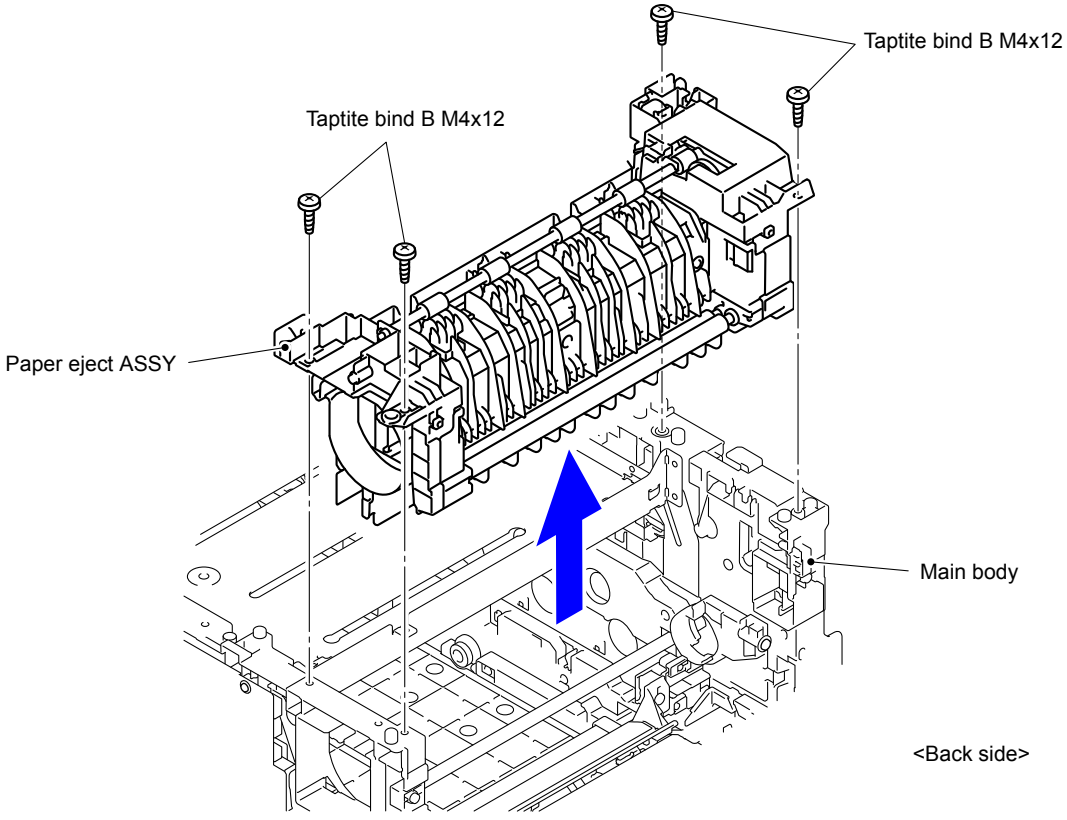

Fig. 3-100

9.28 Toner Filter ASSY

(1) Release the five Hooks and remove the Toner filter ASSY from the Paper eject ASSY.

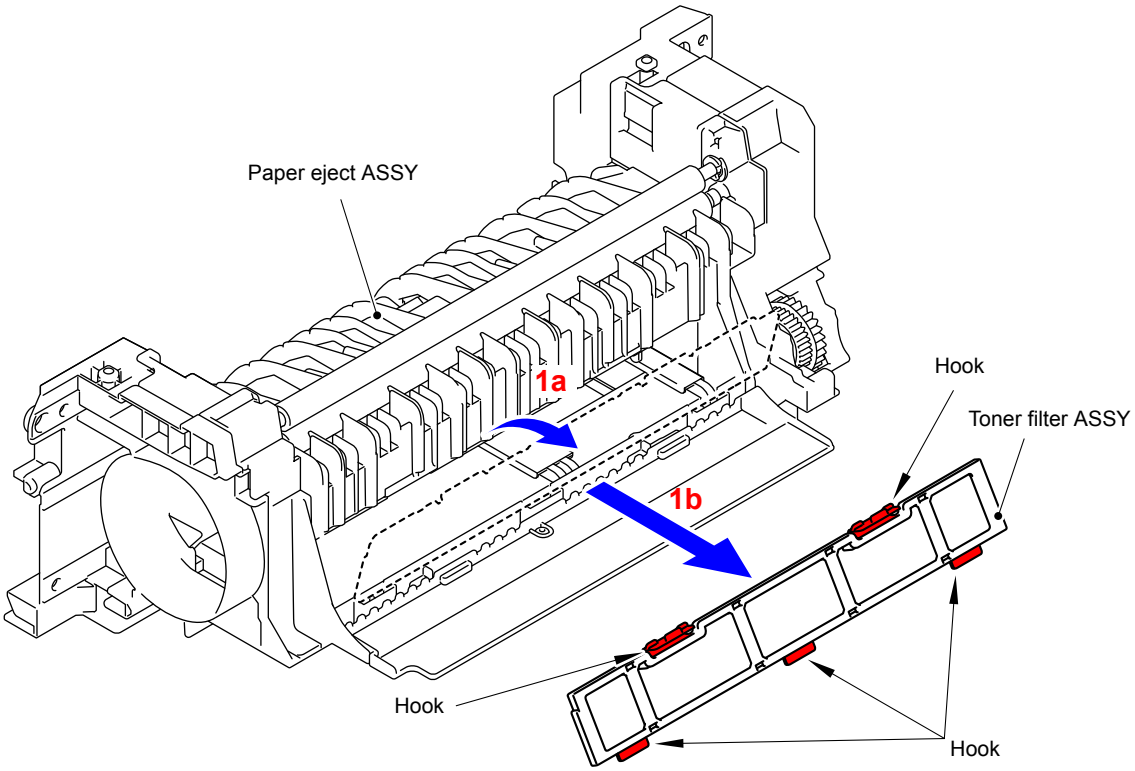

Fig. 3-101

9.29 Paper Eject Origin Sensor

(1) Remove the Eject ground wire 1 from the Paper eject ASSY.

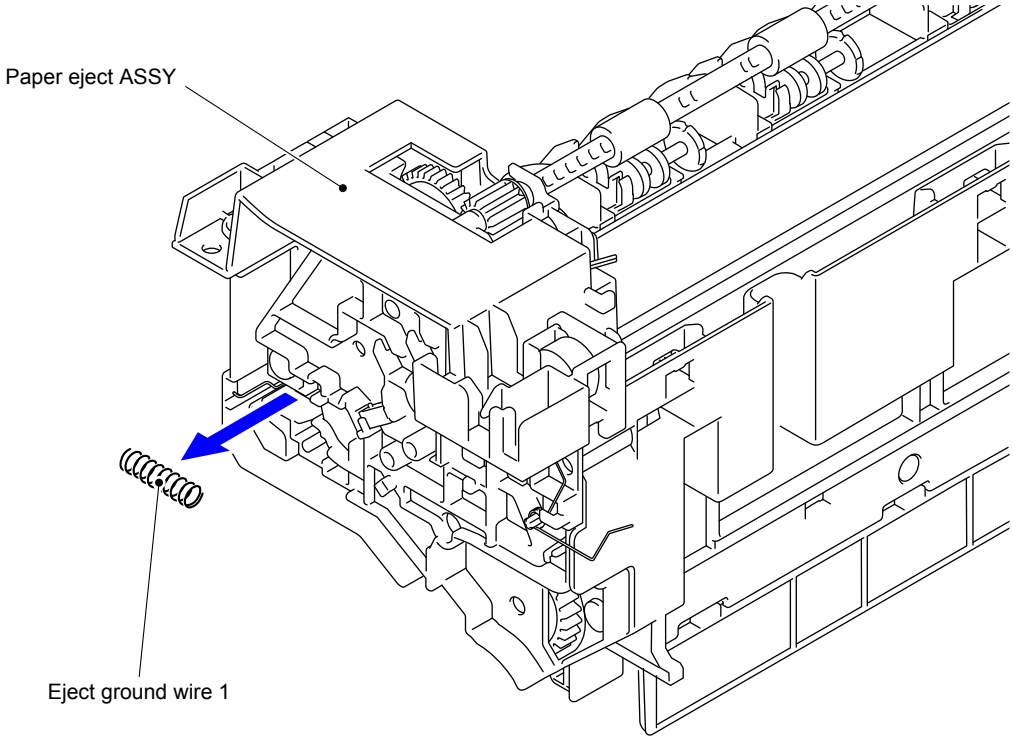

Fig. 3-102

(2) Release the five Hooks and remove the Eject ground wire 2 from the Paper eject ASSY.

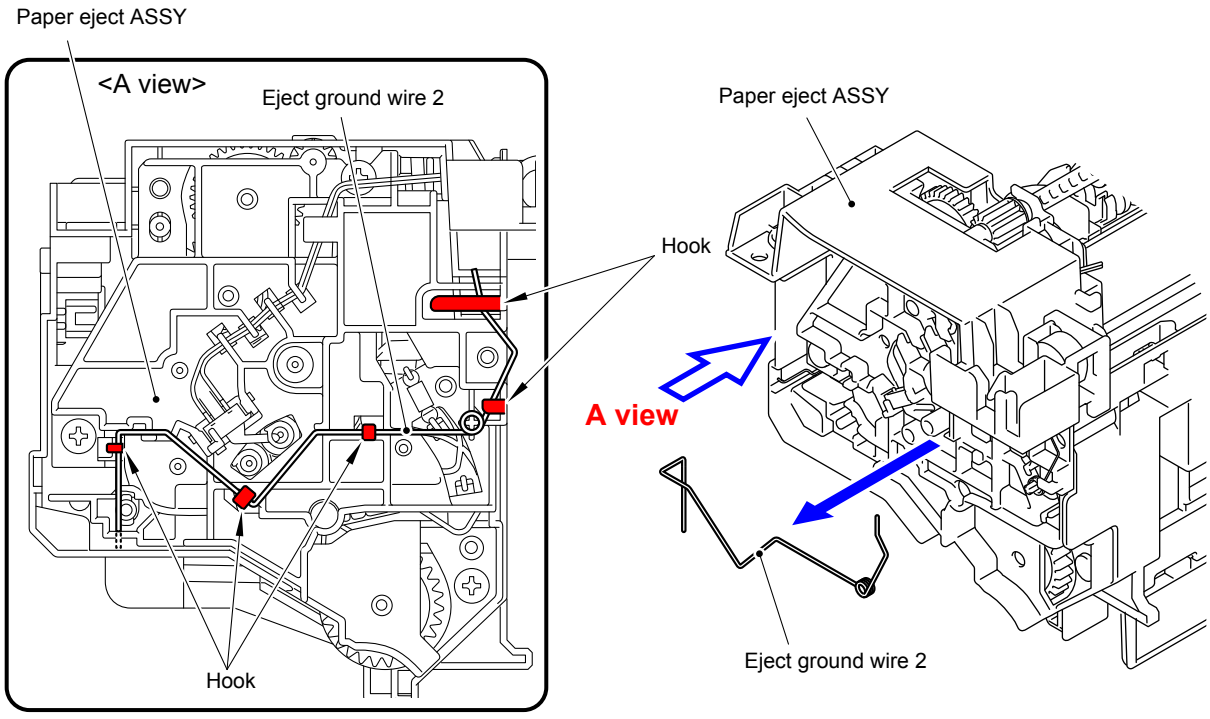

Fig. 3-103

Assembling Note:

After assembling the Eject ground wire 1 and Eject ground wire 2, check the conduction between the Middle roller shaft and the Cooling roller shaft.

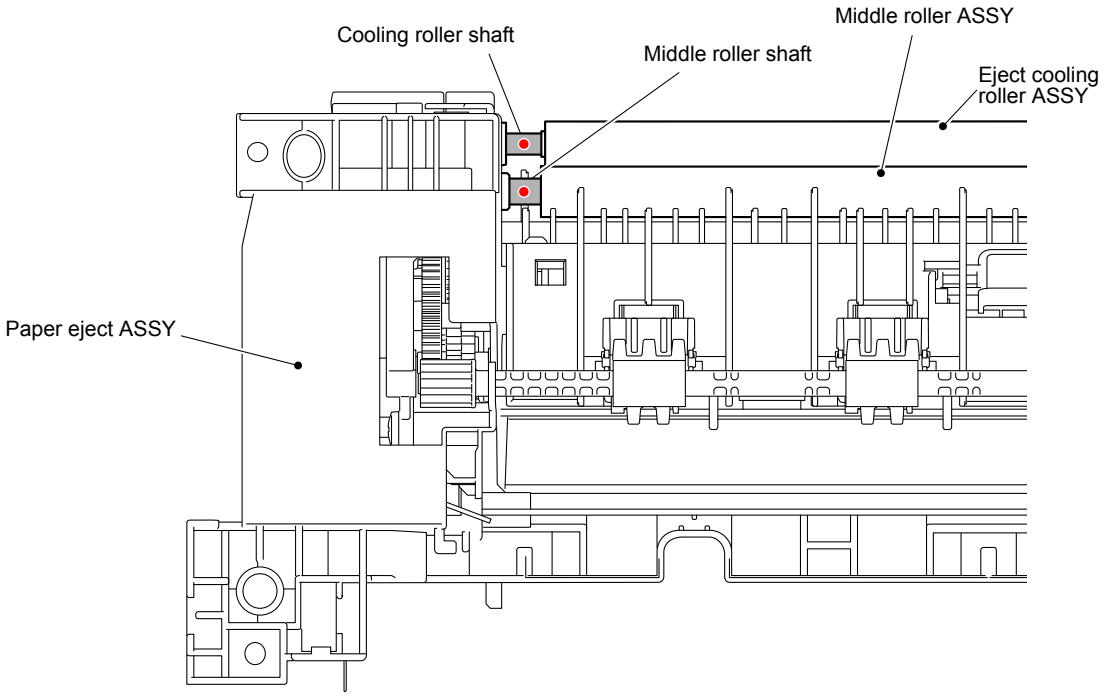

Fig. 3-104

(3) Release the wiring of the Paper eject origin sensor.
(4) Release the two Hooks and remove the Paper eject origin sensor from the Paper eject ASSY.

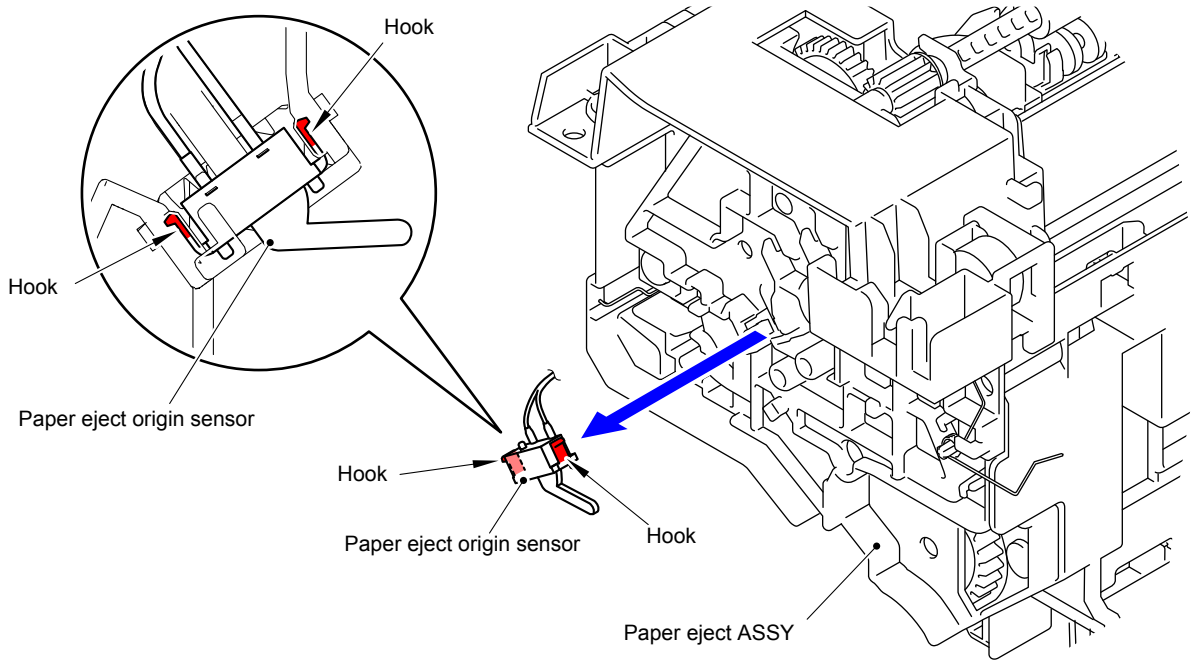

Fig. 3-105

Harness routing: Refer to " 5 Paper Eject ASSY"

9.30 Back Cover Sensor ASSY

(1) Release the wiring of the Back cover sensor ASSY.

(2) Release the two Hooks and remove the Back cover sensor ASSY from the Main body.

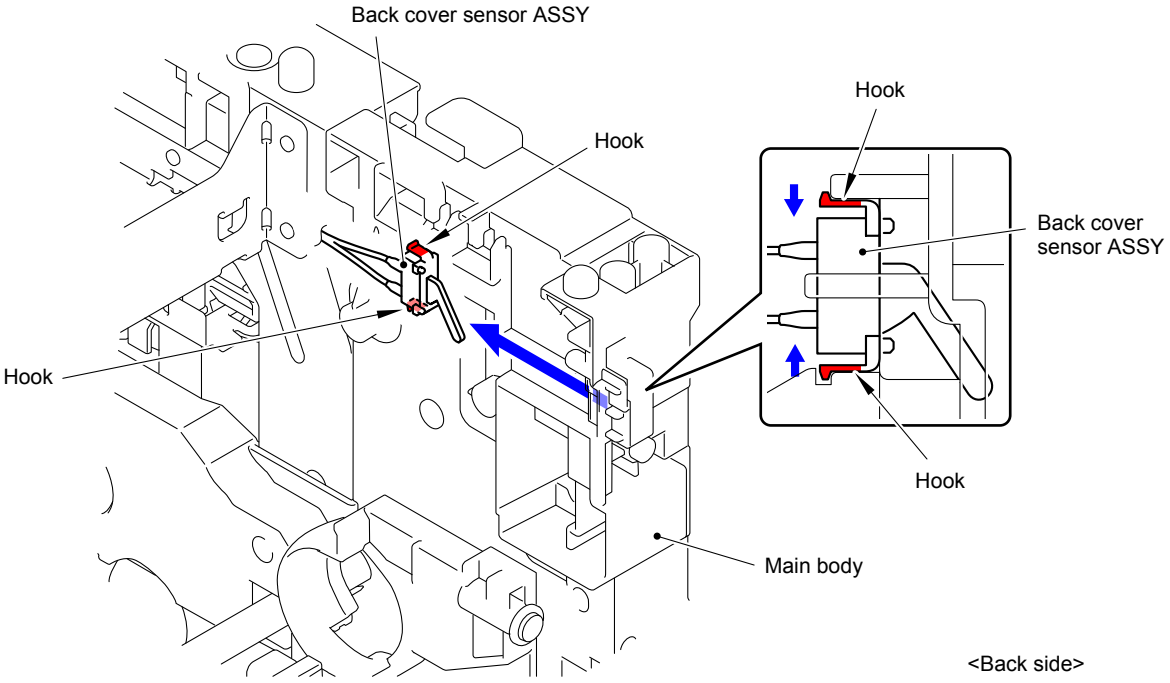

Fig. 3-106

Harness routing: Refer to " 6 Back Cover Sensor ASSY"

9.31 Eject Sensor PCB ASSY

(1) Release the wiring of the Eject sensor PCB ASSY.

(2) Release the Hook and remove the Eject sensor PCB ASSY from the Main body.

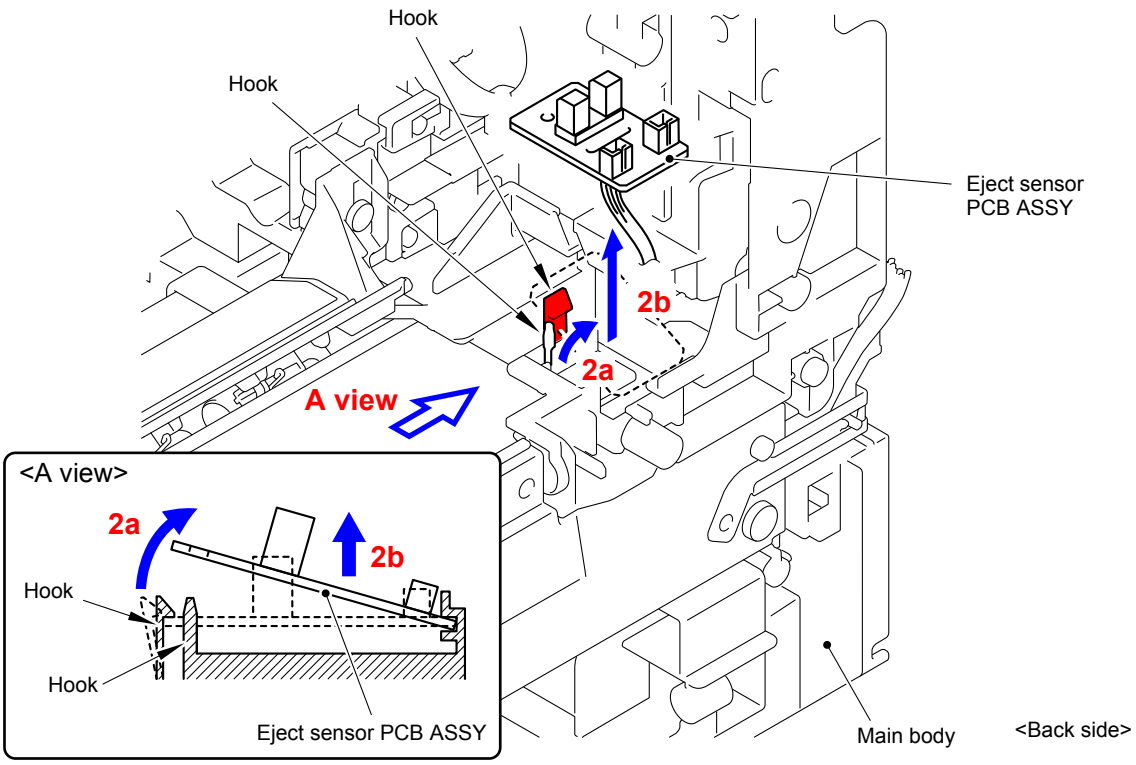

Fig. 3-107

Harness routing: Refer to " 7 Eject Sensor PCB ASSY, Fuser Unit"

9.32 Registration Mark Sensor Unit

(1) Release the wiring of the Registration mark sensor unit.
(2) Remove the two Taptite bind B M3x10 screws from the Registration mark sensor unit. Release the two Bosses and remove the Registration mark sensor unit from the Main body.

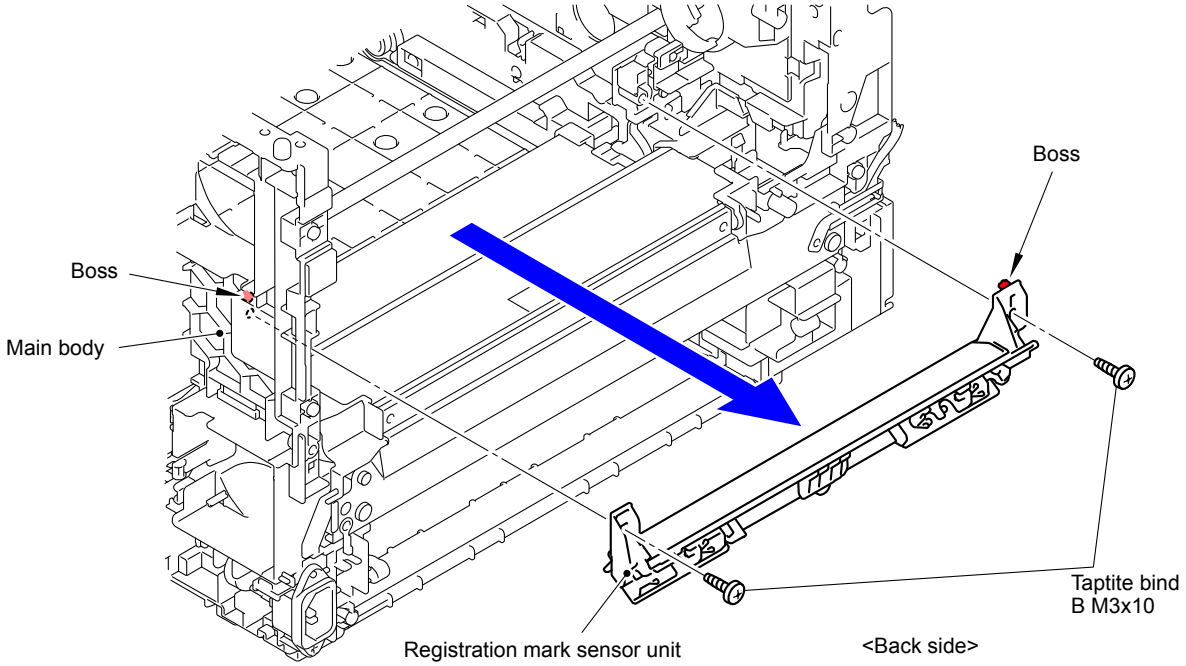

Fig. 3-108

Assembling Note:
- When attaching the Registration mark sensor unit, make sure that the Registration ground spring is placed as shown in the figure.
- After assembling the Registration mark sensor unit, make sure that the Front chute flapper moves.

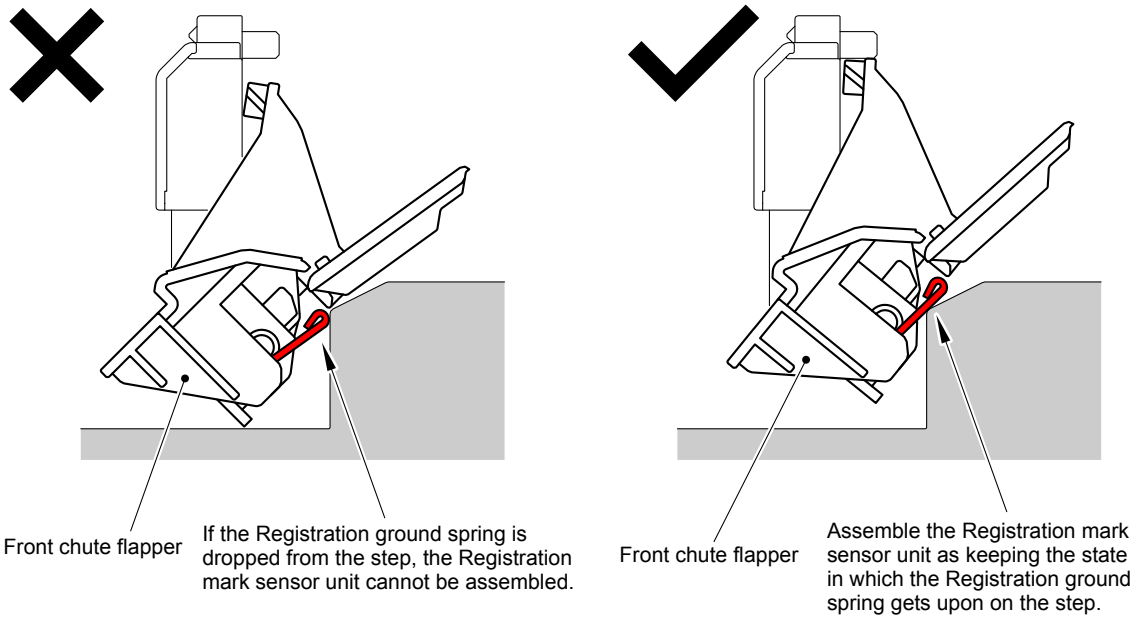

Fig. 3-109

Harness routing: Refer to “ 8 Registration Mark Sensor Unit”

9.33 Power Fan

(1) Disconnect the Connector (CN5) from the High-voltage power supply PCB ASSY.

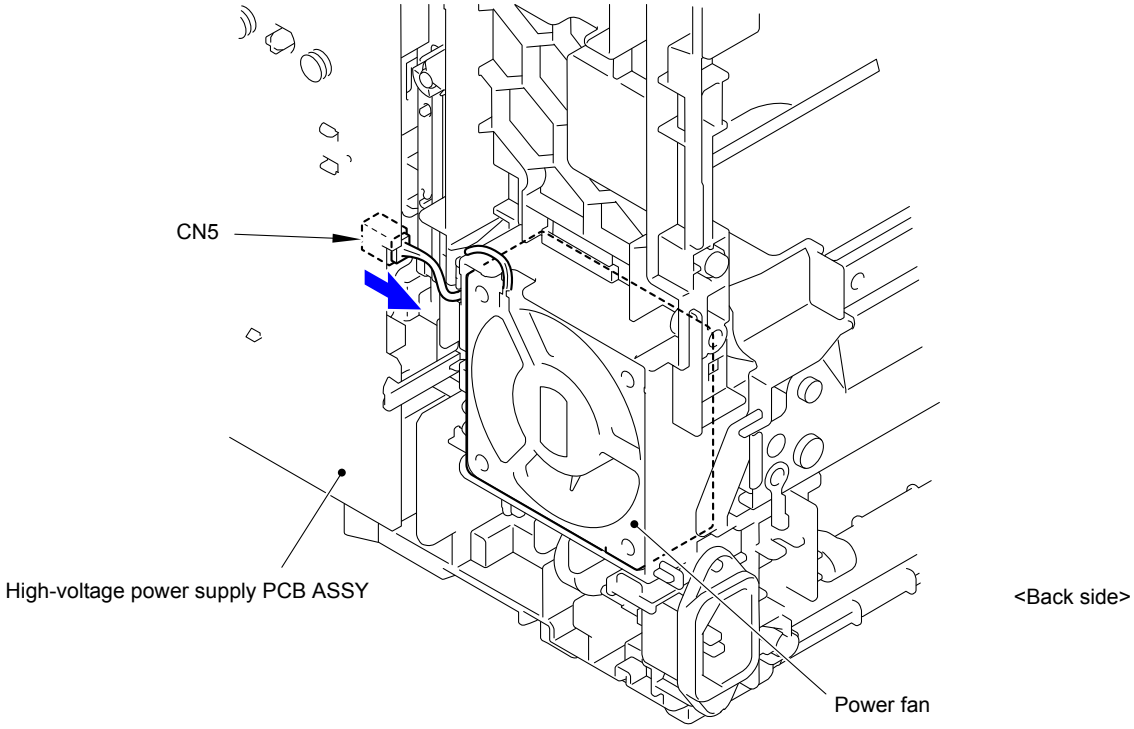

Fig. 3-110

(2) Slightly rotate the Power fan in the direction of the arrow 2a and pull it out from the Main body.

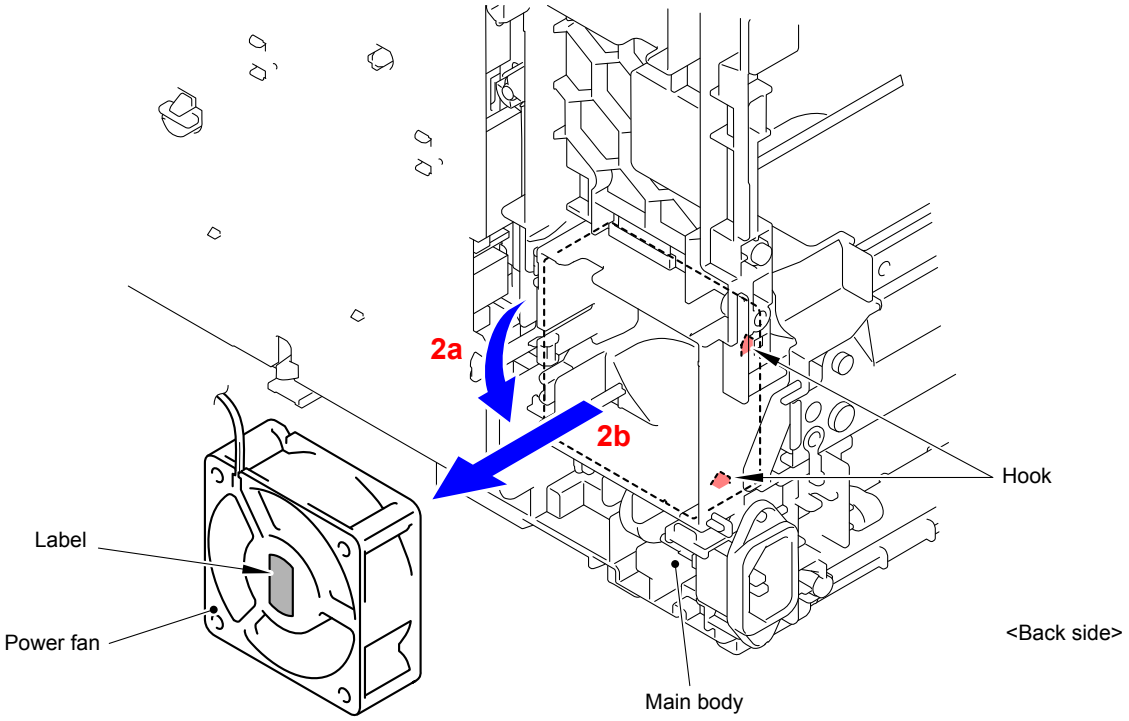

Fig. 3-111

Assembling Note:
When assembling the Power fan, be sure to assemble it in a way that the label side faces out.

Harness routing: Refer to " 9 Fuser Fan, Power Fan"

9.34 Low-voltage Power Supply PCB Unit

(1) Remove the Screw pan (S/P washer) M3.5x6 screw and remove the FG harness of the Inlet harness ASSY from the LVPS plate.

(2) Remove the Taptite flat B M3x10 screw and remove the Inlet harness ASSY from the Main body.

(3) Release the wiring of the Inlet harness ASSY.

(4) Release the wiring of the LVPS-heater harness ASSY.

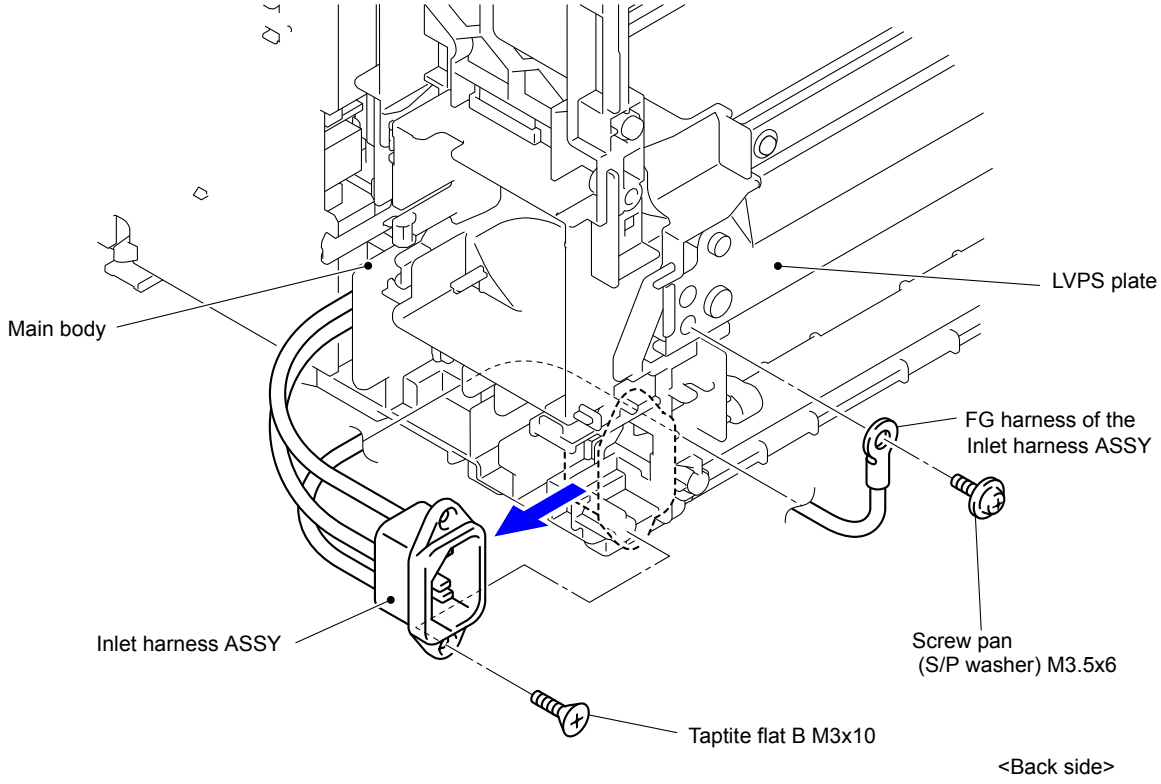

Fig. 3-112

(5) Remove the Screw pan (S/P washer) M3.5x6 screw from the Drive ground plate.
(6) Release the Boss and remove the Drive ground plate from the Low-voltage power supply PCB unit.
(7) Release the wiring of the LVPS-main harness ASSY.

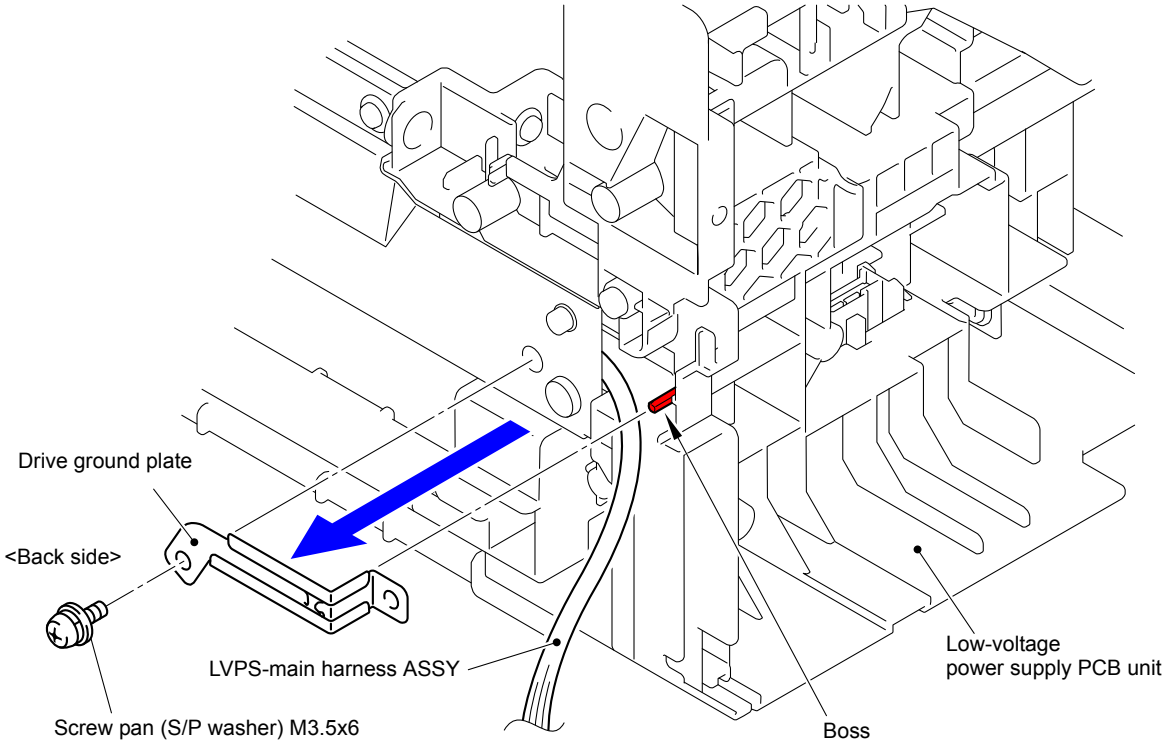

Fig. 3-113

(8) Remove the two Taptite cup S M3x8 SR screws and two Taptite bind B M4x12 screws, and remove the LVPS plate from the Main body.

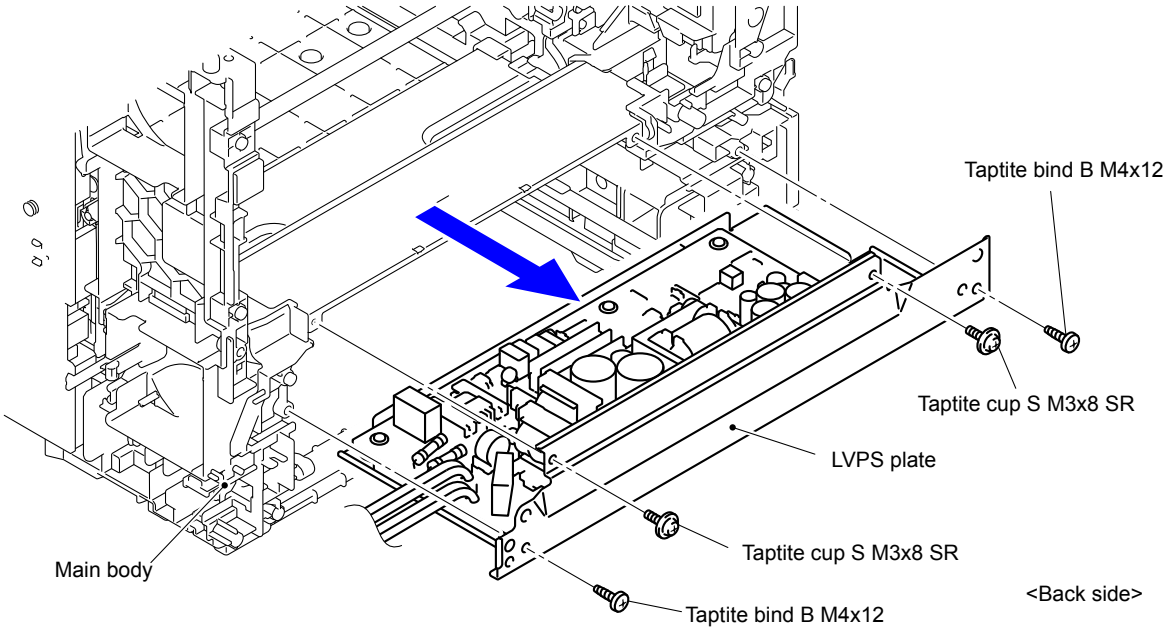

Fig. 3-114

(9) Disconnect the Connector (CN101) of the LVPS-main harness ASSY from the Low-voltage power supply PCB unit.

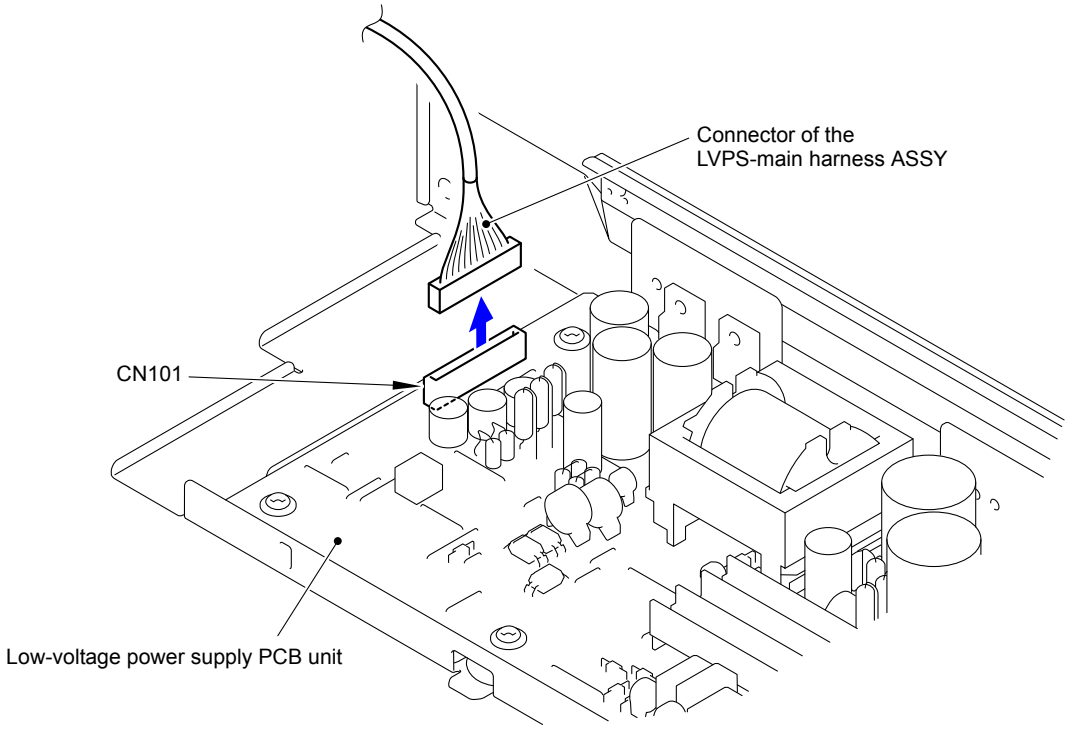

Fig. 3-115

(10) Remove the five Taptite cup S M3x6 SR screws and remove the Low-voltage power supply PCB unit from the LVPS plate.

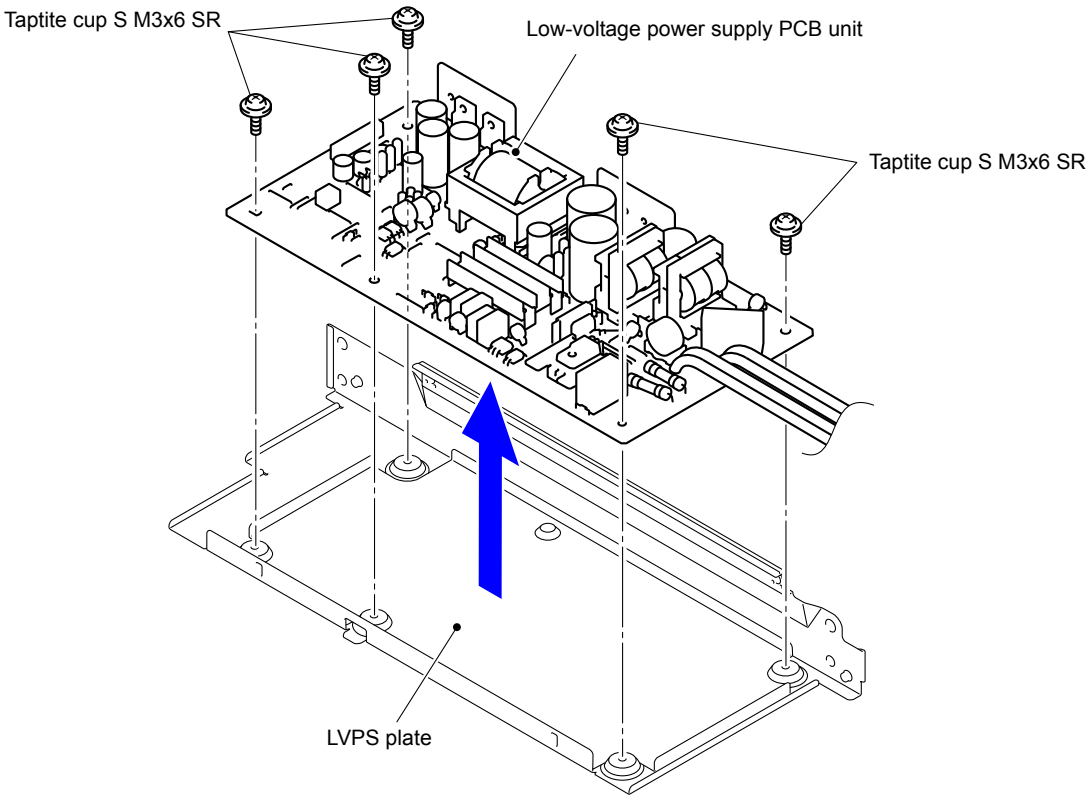

Fig. 3-116

Harness routing: Refer to " 10 Low-voltage Power Supply PCB Unit"

9.35 MP Paper Empty Actuator A ASSY/ MP Paper Empty Actuator B

(1) Press “A” to release the Hook and remove the MP upper frame cover from the MP upper cover ASSY.

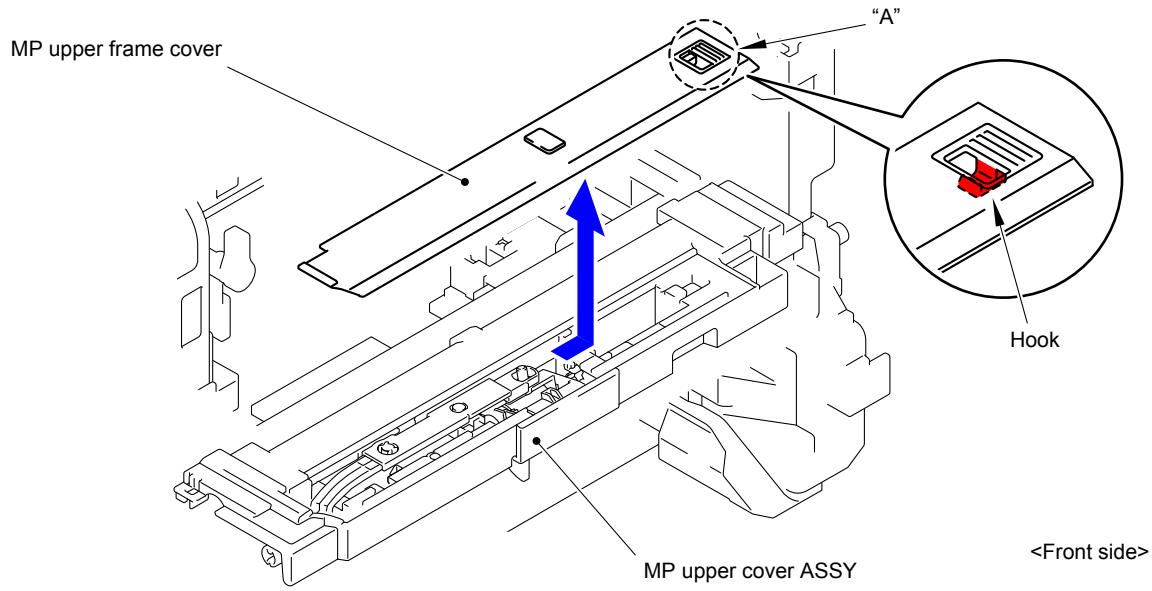

Fig. 3-117

(2) Remove the MP lift arm B from the MP upper cover ASSY.

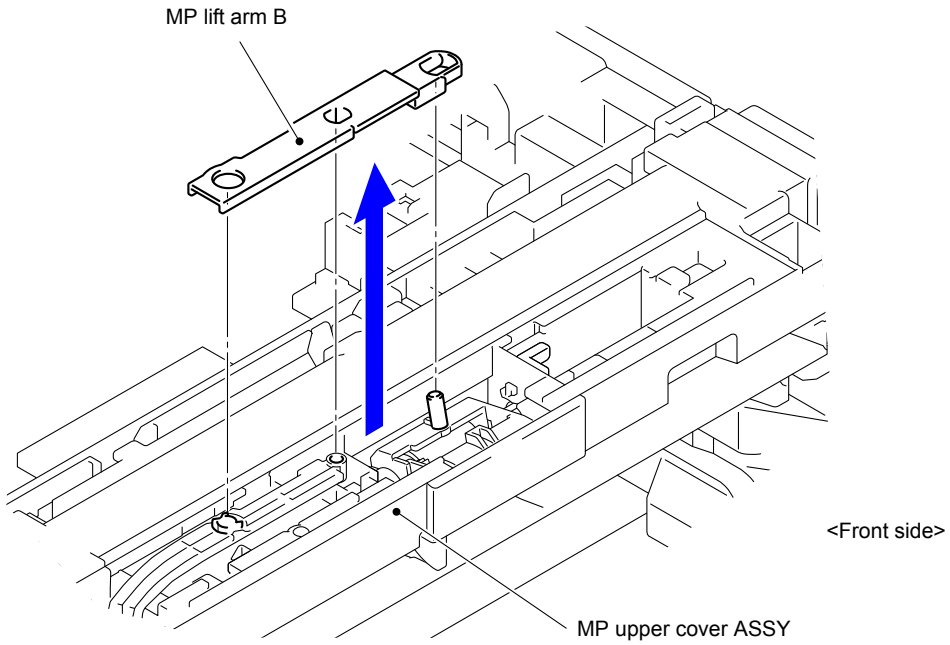

Fig. 3-118

(3) Release the Hook 1 and rotate the MP holder bushing in the direction of the arrow.

(4) Release the Hook 2 and remove the MP holder bushing from the MP upper cover ASSY.

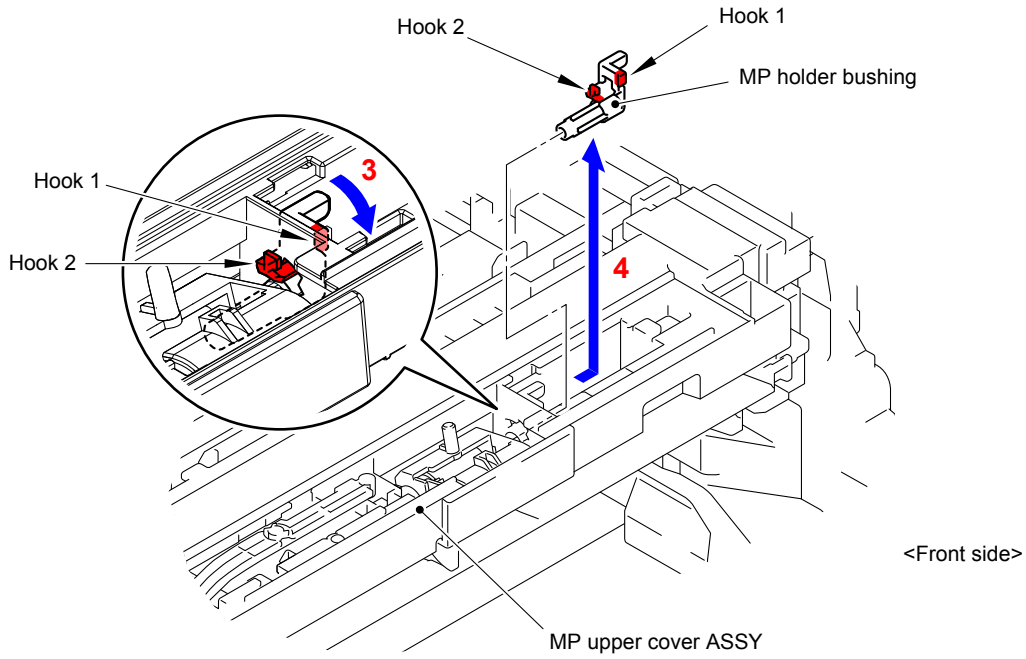

Fig. 3-119

(5) Remove the MP roller holder ASSY from the MP upper cover ASSY.

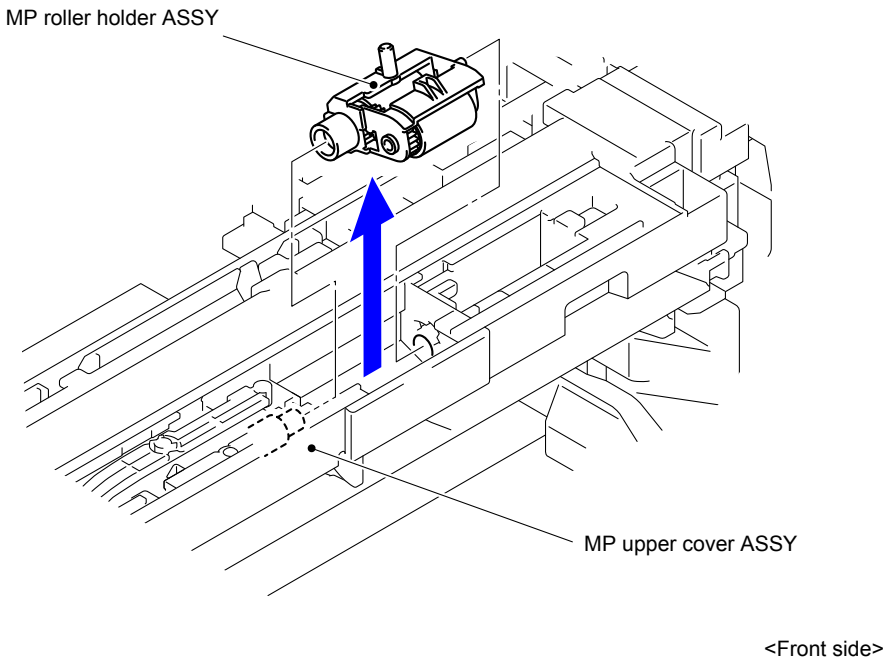

Fig. 3-120

(6) Remove the Registration gear Z26-23 from the Registration/pinch roller gear bushing.

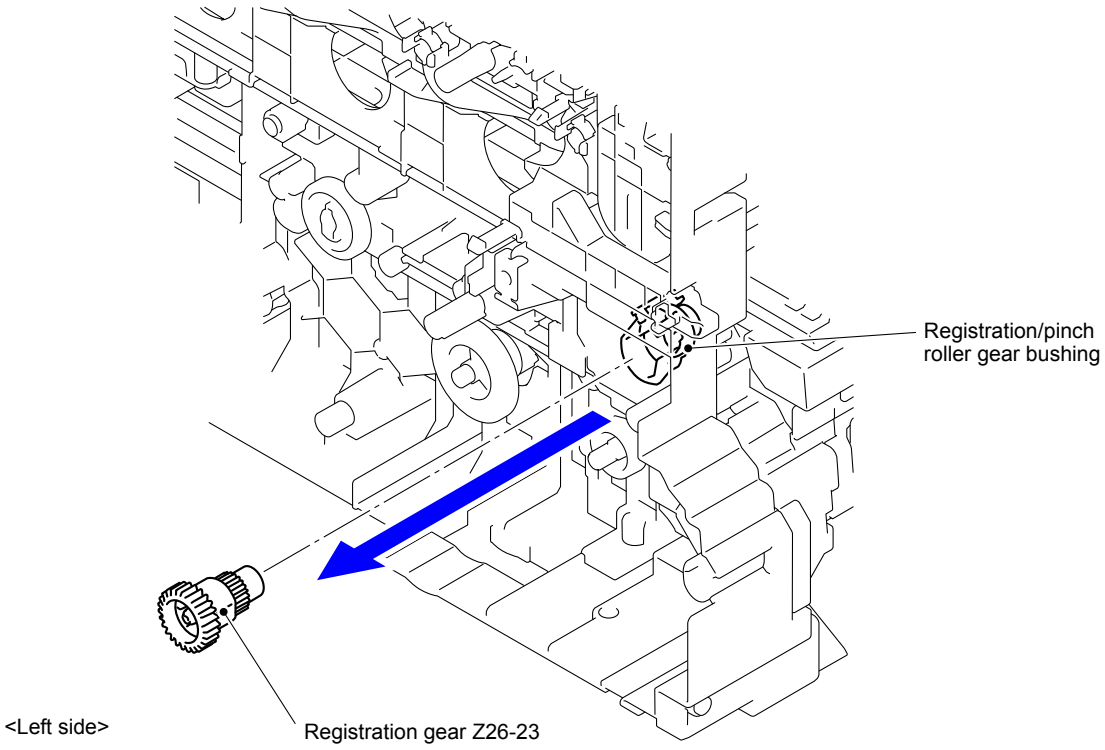

Fig. 3-121

(7) Remove the Pinch roller drive gear Z21M05 from the Registration/pinch roller gear bushing.

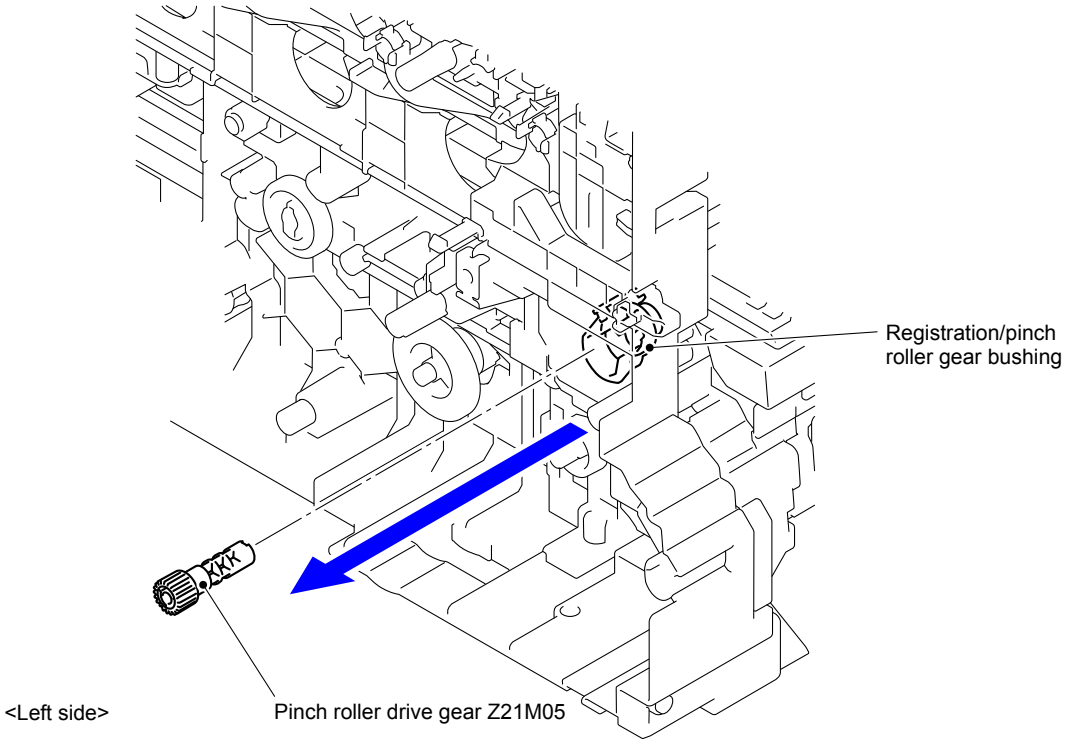

Fig. 3-122

(8) Release the Hook and remove the Registration/pinch roller gear bushing from the Main body.
(9) Release the wiring of the Registration/pinch roller gear bushing.

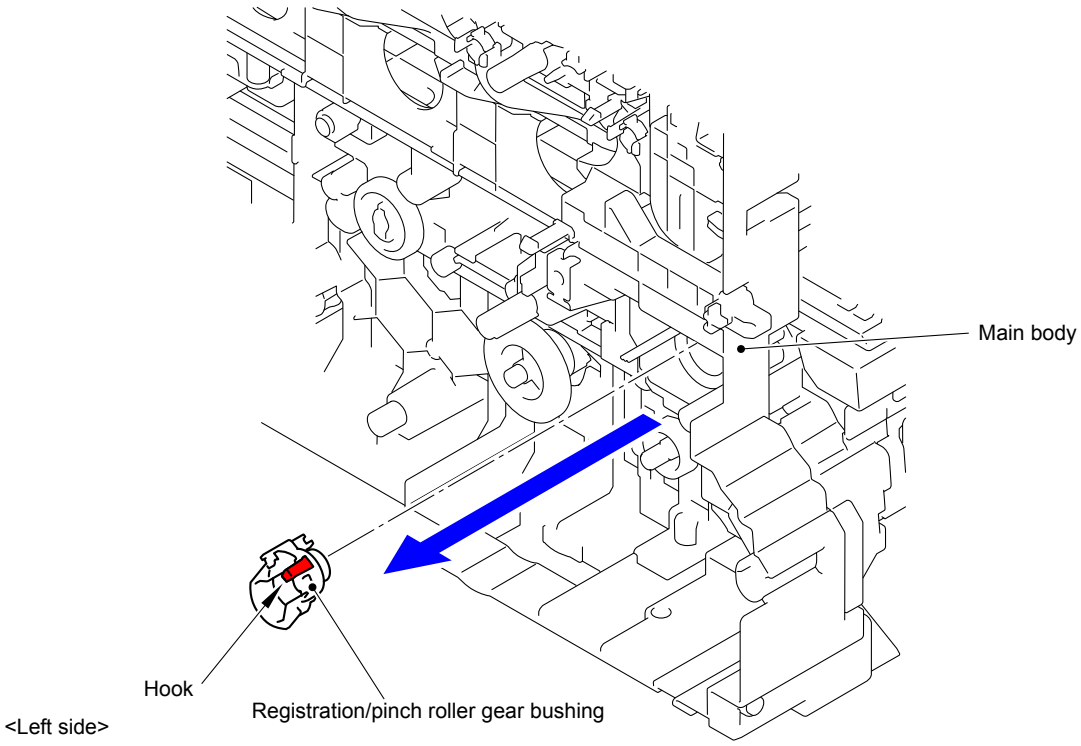

Fig. 3-123

(10) Slide the MP drive shaft as shown in the figure.
(11) Remove the two Taptite bind B M3x10 screws from the MP upper cover ASSY.
Release the two Hooks and remove the MP upper cover ASSY from the MP lower chute ASSY.

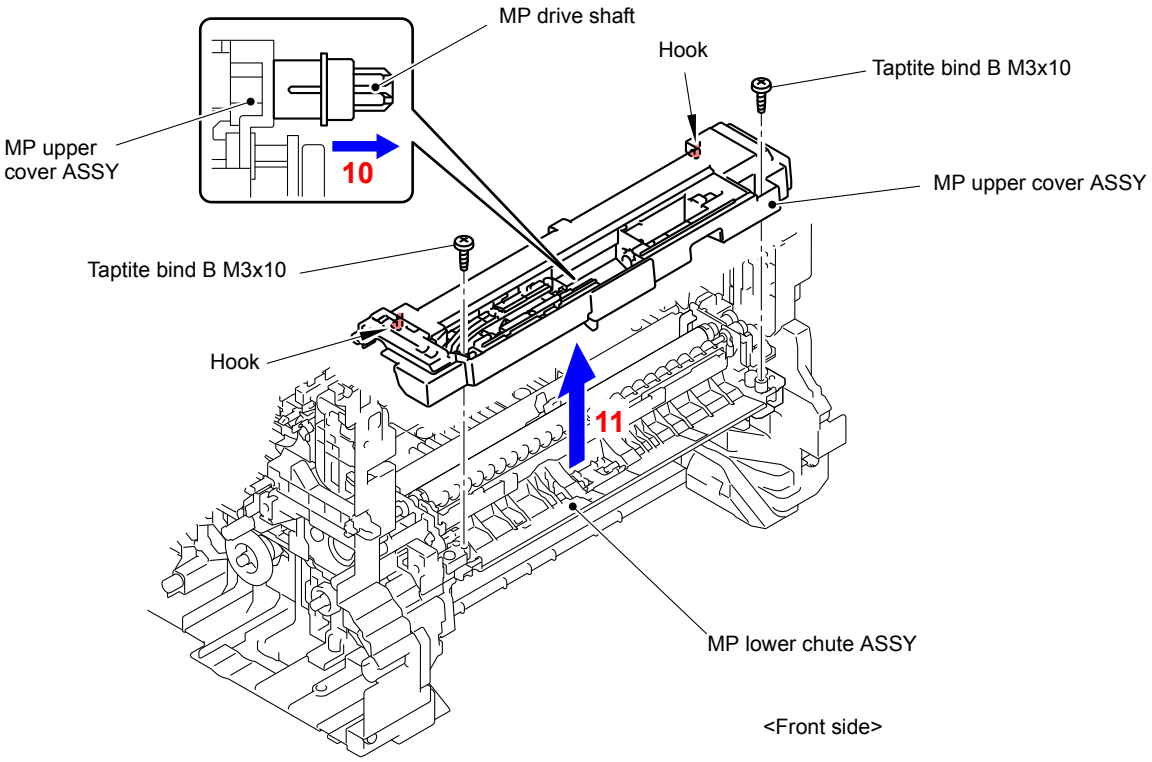

Fig. 3-124

Assembling Note:

When assembling the MP upper cover ASSY, attach “A” of the MP lift arm A to the MP lift lever.

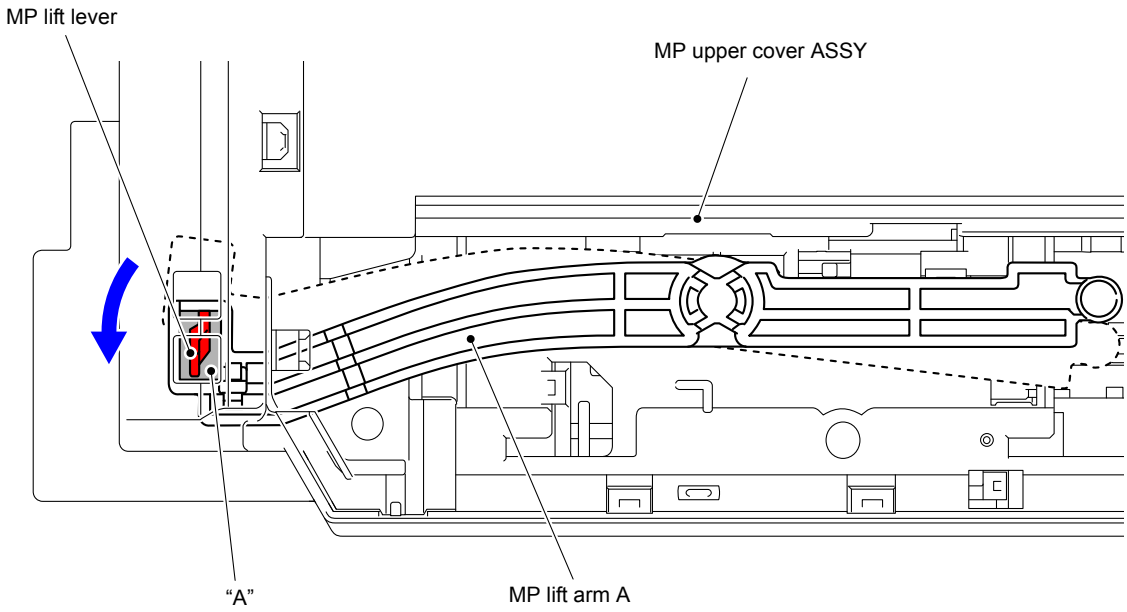

Fig. 3-125

(12) Release the five Hooks and remove the Sensor cover MP from the MP upper cover ASSY.

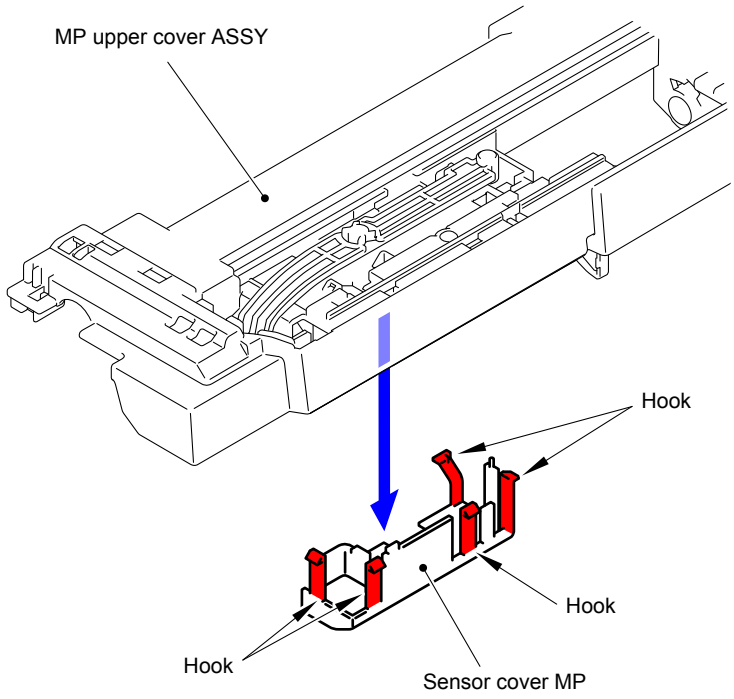

Fig. 3-126

(13) Release the two Hooks and remove the MP paper empty actuator A ASSY from the MP upper cover ASSY.

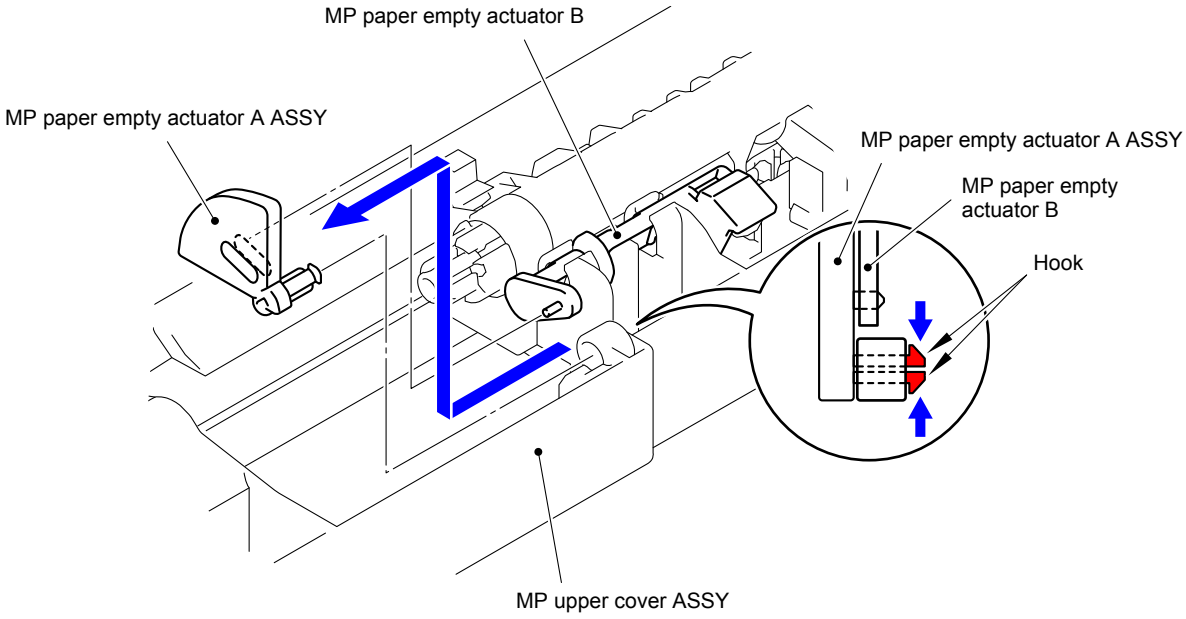

Fig. 3-127

(14) Release the Hook and remove the MP paper empty actuator B from the MP upper cover ASSY.

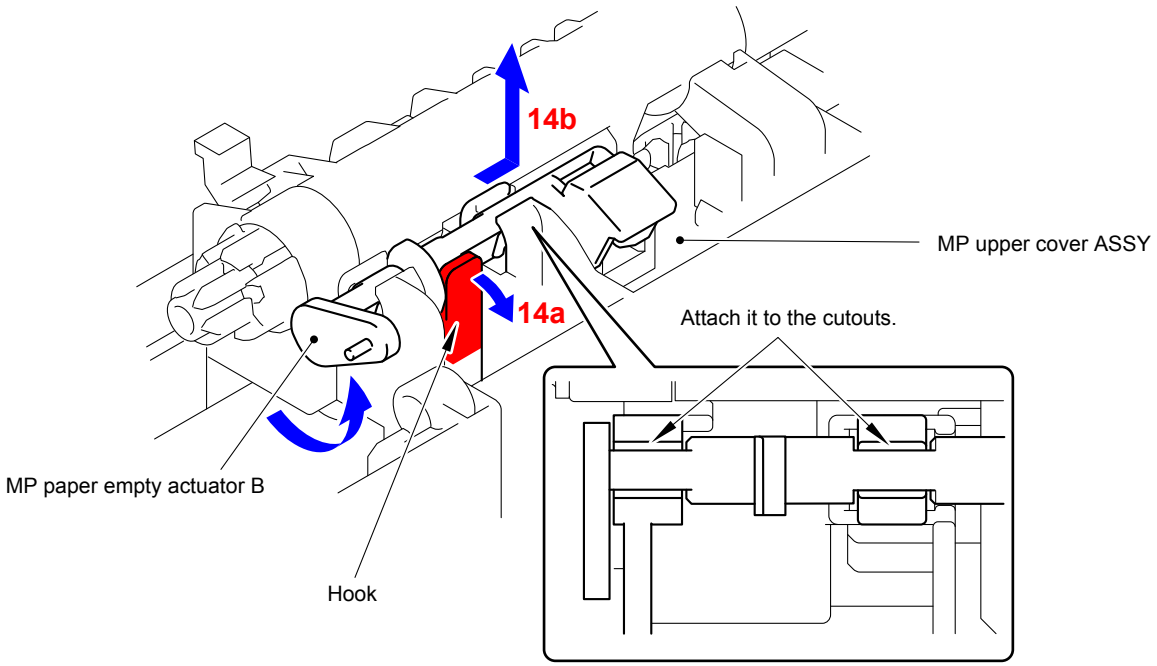

Fig. 3-128

9.36 MP Paper Empty/Registration Front Sensor PCB ASSY

(1) Release the Hook and remove the MP separation roller bushing from the MP drive shaft.

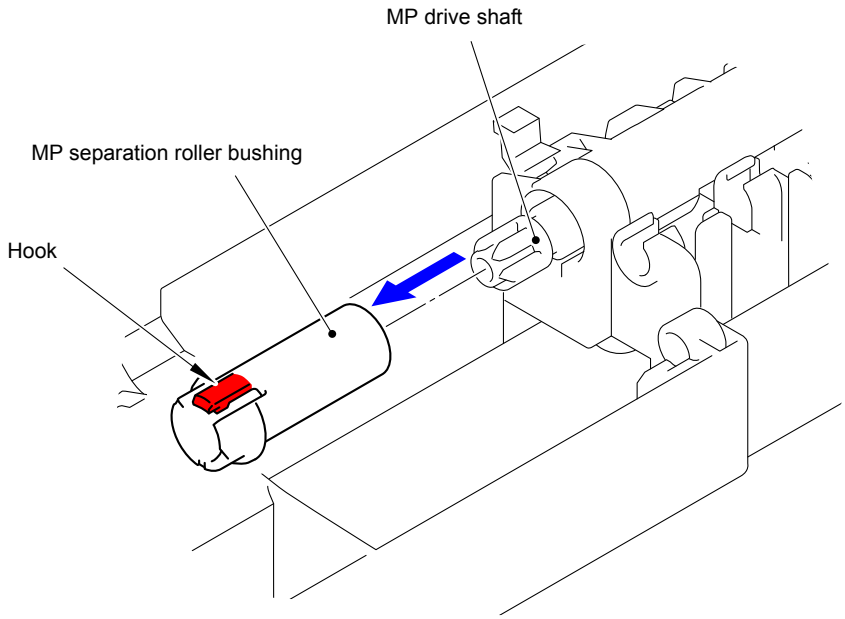

Fig. 3-129

(2) Release the two Hooks and remove the MP registration front actuator spring from the MP registration front actuator.

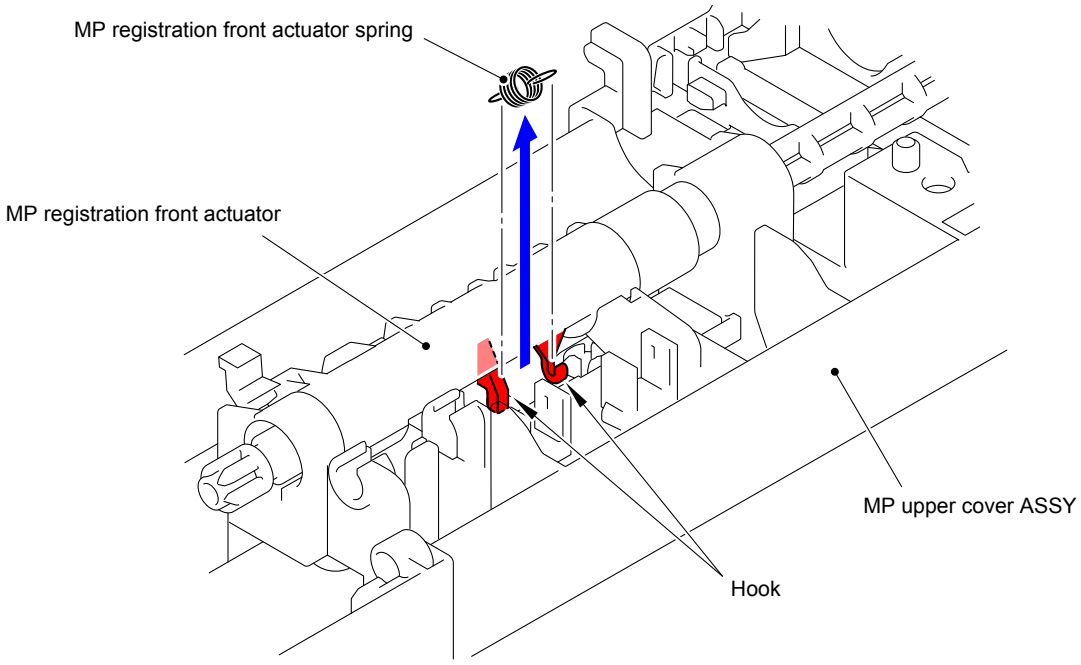

Fig. 3-130

(3) Pull out the MP drive shaft and remove the MP registration front actuator from the MP upper cover ASSY.

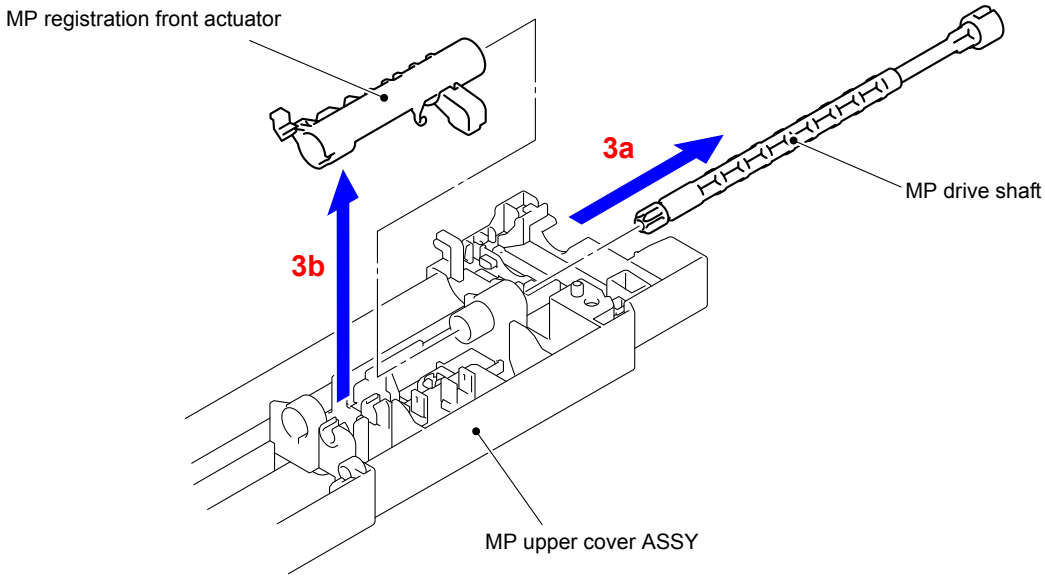

Fig. 3-131

(4) Release the wiring of the MP paper empty/registration front sensor PCB ASSY.

(5) Remove the Taptite bind B M3x8 screw and remove the MP paper empty/registration front sensor PCB ASSY from the MP upper cover ASSY.

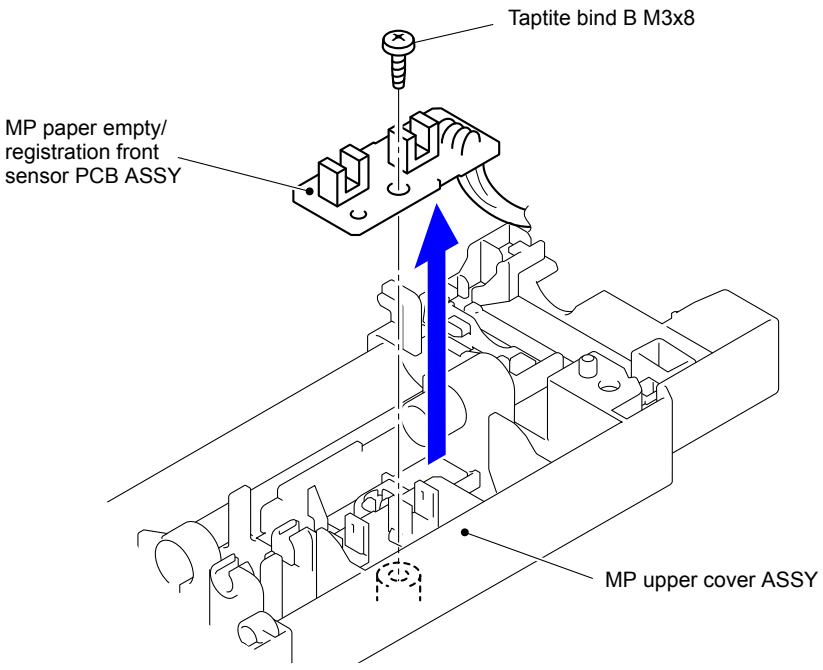

Fig. 3-132

Harness routing: Refer to " 11 MP Paper Empty/Registration Front Sensor PCB ASSY"

9.37 Paper Feed Unit/Joint Pin

(1) Push the T1 lift arm to the back and remove “B” of the Roller holder ASSY from “A” of the T1 lift arm.

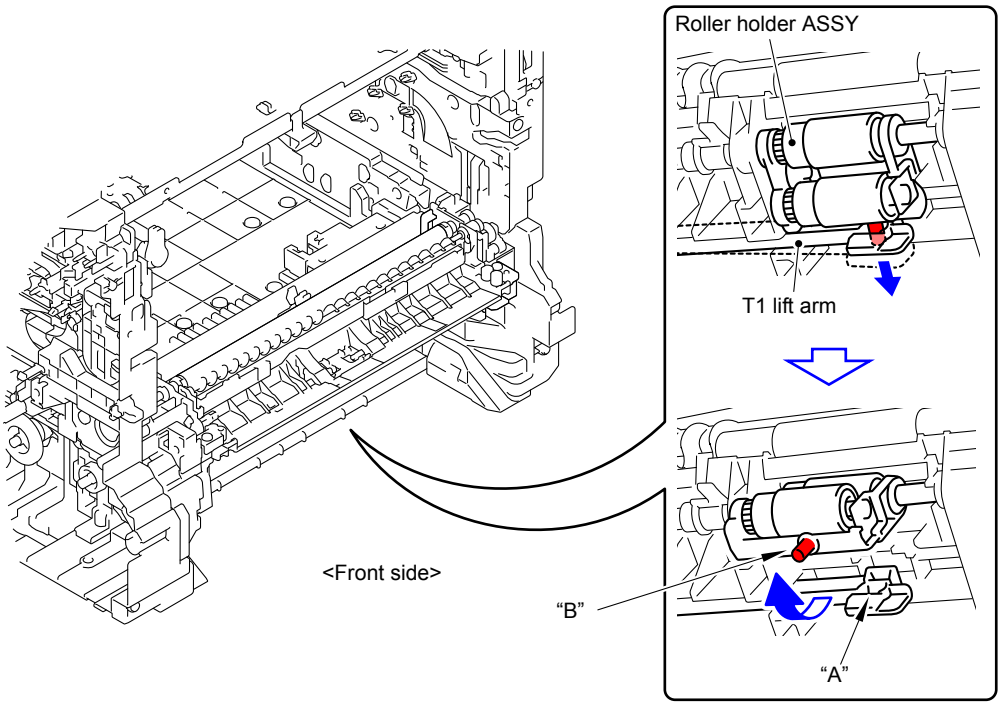

Fig. 3-133

(2) Slide the Roller holder ASSY in the direction of the arrow and remove it from the T1 drive shaft gear Z17M07.
(3) Slide the Roller holder ASSY in the direction of the arrow 3a and 3b in this order and remove it from the Paper feed unit.

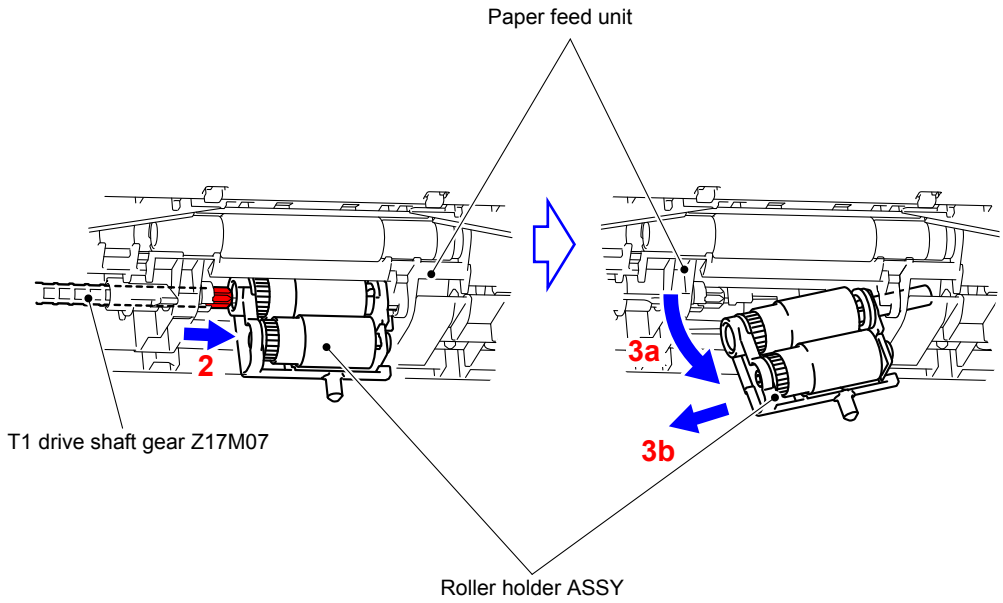

Fig. 3-134

Assembling Note:
Align the Hole of the Paper feed unit to the Shaft of the Roller holder ASSY and insert it into the Hole.

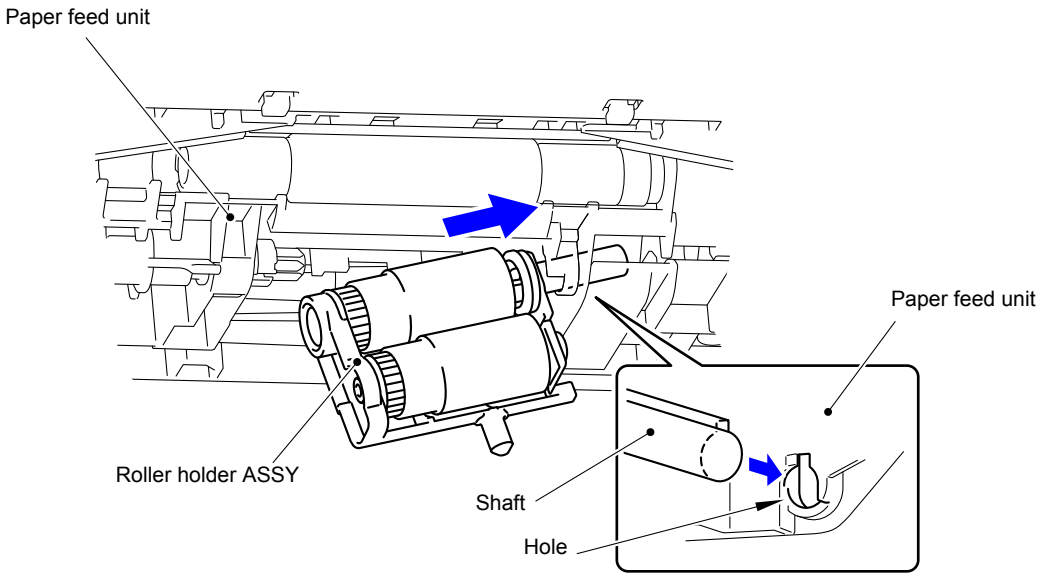

Fig. 3-135

(4) Move the T1 lift arm in the direction of the arrow 4b as bending it in the direction of the arrow 4a and remove it from the Boss of the Paper feed unit.

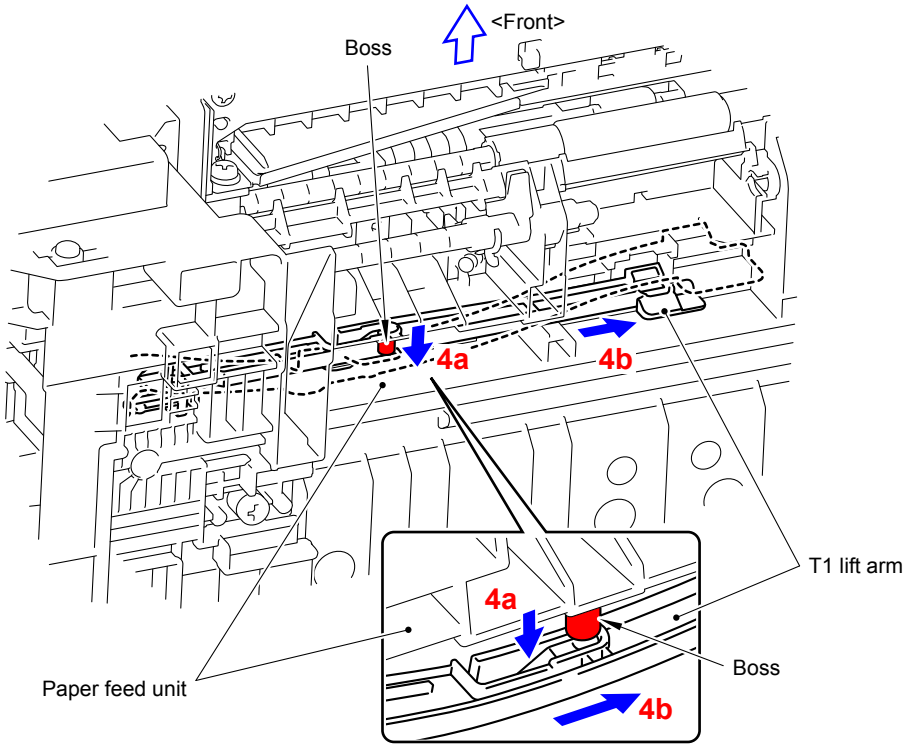

Fig. 3-136

Confidential

(5) Remove the PF drive gear 21 and PF drive joint from the Main body.

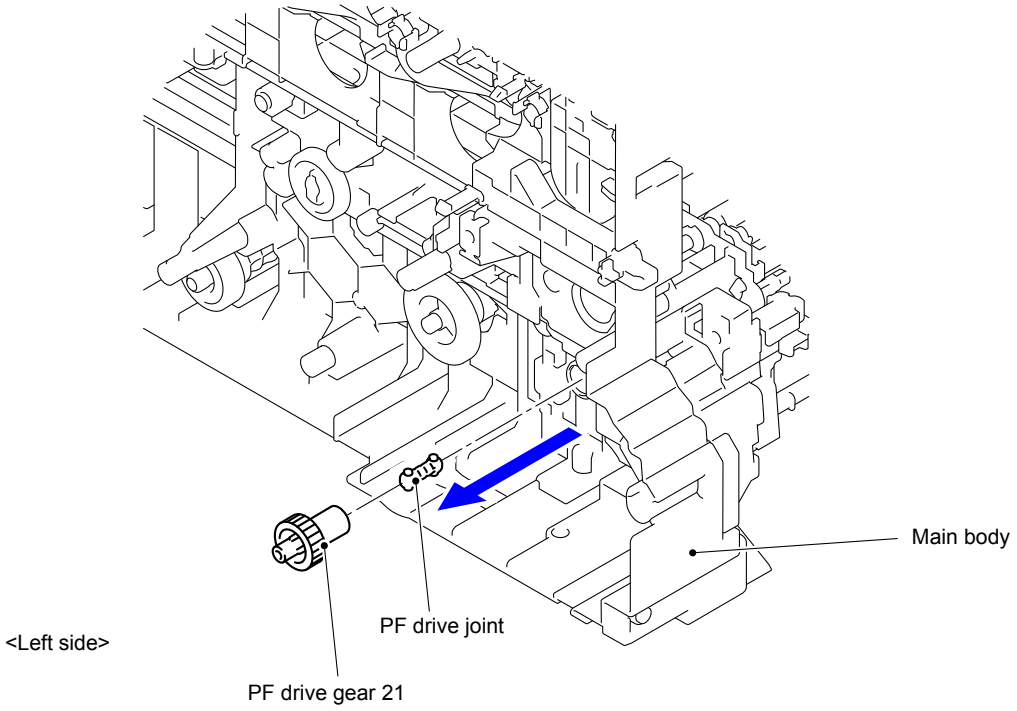

Fig. 3-137

(6) Remove the Taptite cup B M3x12 screw from the Paper feed unit.

(7) Remove the two Taptite bind B M4x12 screws, then shift the Paper feed unit to the right, and remove it from the Main body.

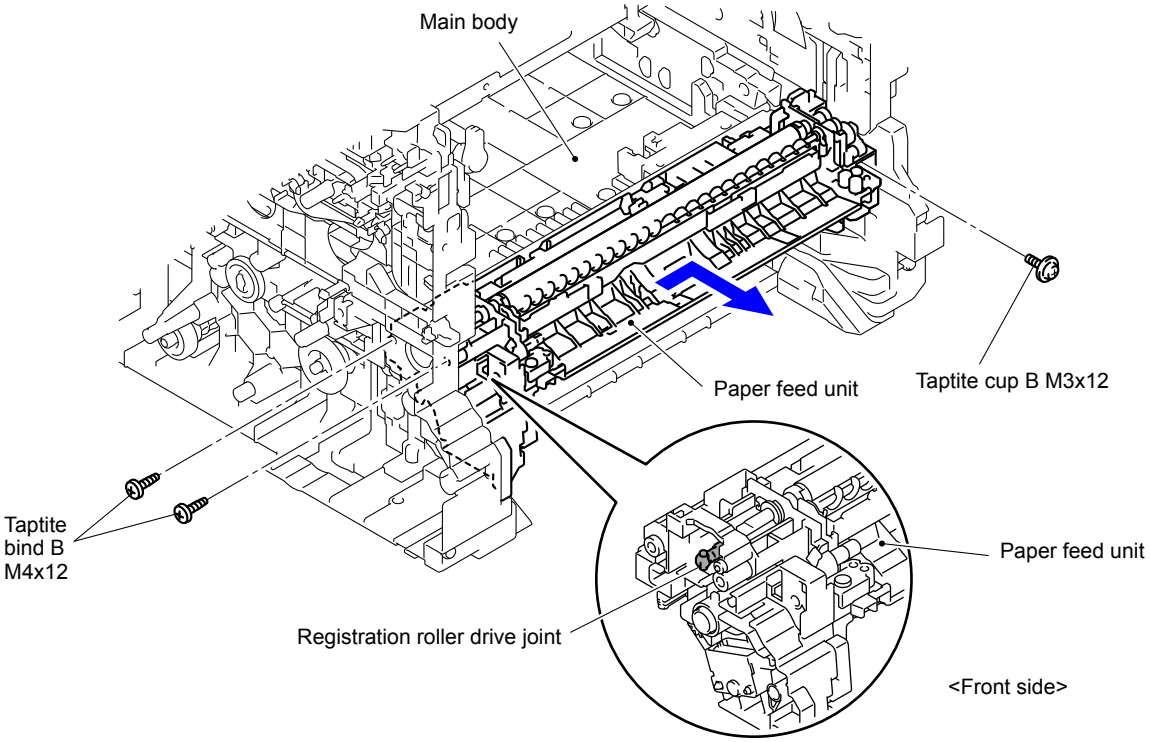

Fig. 3-138

(8) Remove the Registration roller drive joint from the PF registration roller shaft.

(9) Remove the Joint pin from the PF registration roller shaft.

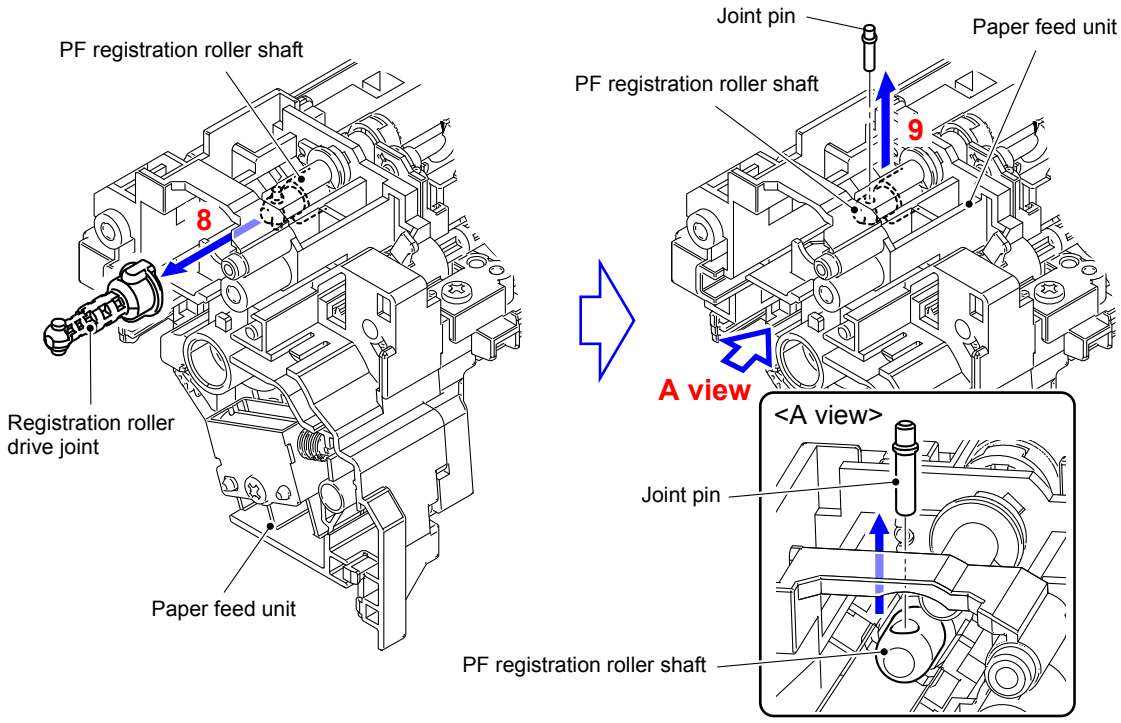

Fig. 3-139

Harness routing: Refer to " 12 Paper Feed Unit"

9.38 Registration Front/Rear Sensor PCB ASSY

(1) Release the wiring of the Registration front/rear sensor PCB ASSY.
(2) Remove the Taptite bind B M3x10 screw and remove the Registration front/rear sensor PCB holder from the Paper feed unit.

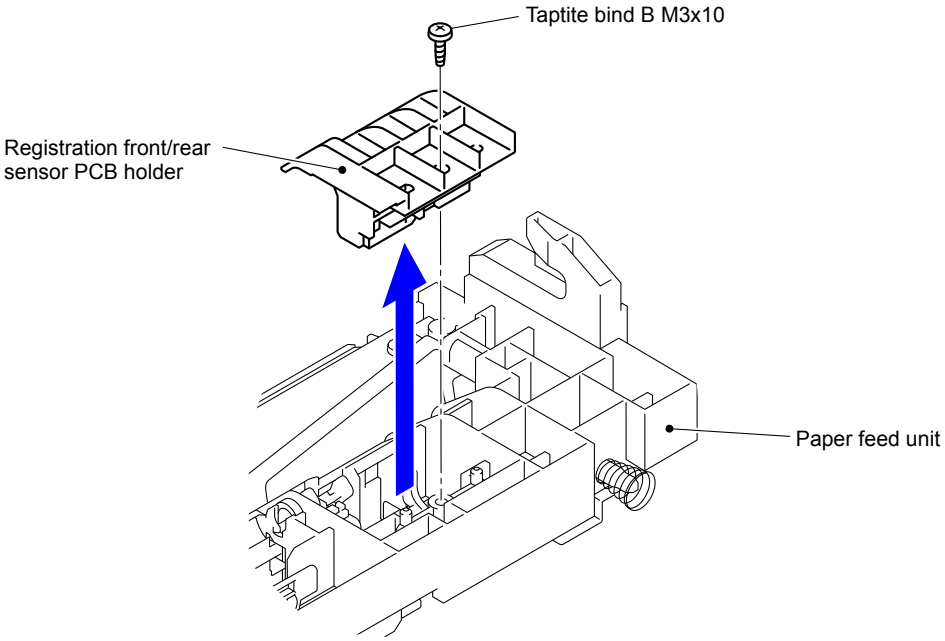

Fig. 3-140

(3) Release the three Hooks and remove the Registration front/rear sensor PCB ASSY from the Registration front/rear sensor PCB holder.

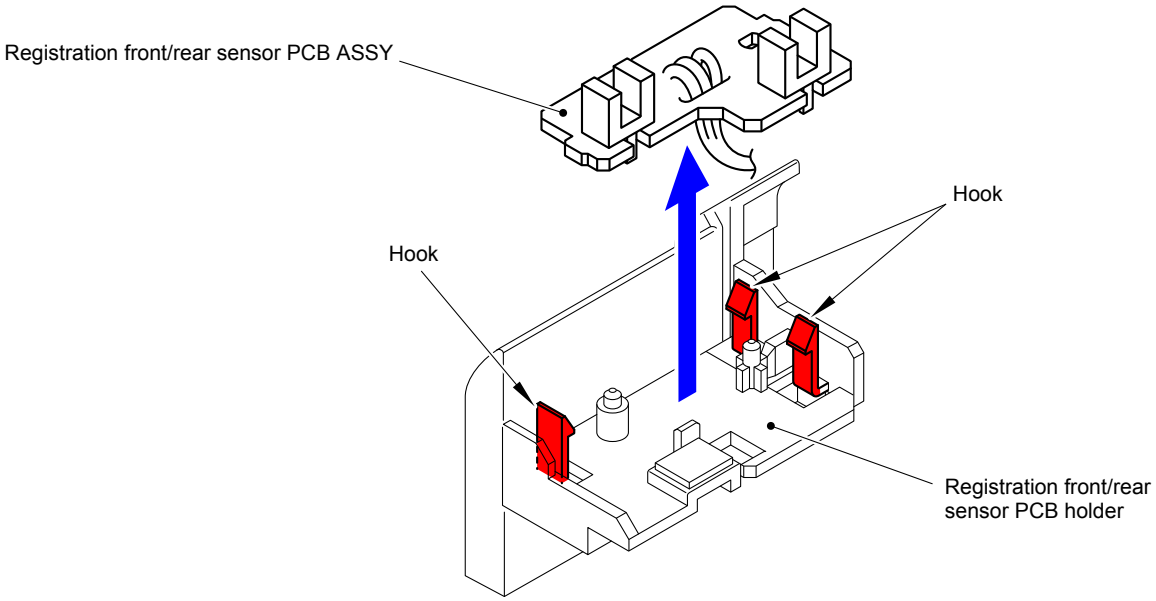

Fig. 3-141

Harness routing: Refer to " 12 Paper Feed Unit"

9.39 T1 Paper Feed Sensor PCB ASSY

(1) Release all the wiring from the MP drive frame.

(2) Remove the three Taptite bind B M3x10 screws and remove the MP drive frame from the Paper feed unit.

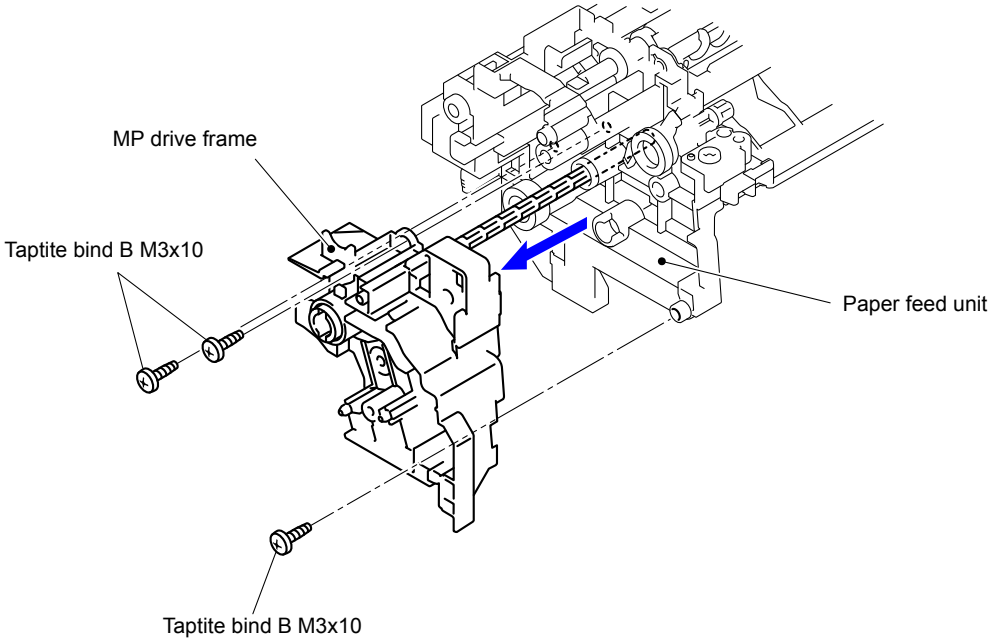

Fig. 3-142

Note:

- As the MP drive shaft gear Z17M07, MP lift lever and Registration roller drive joint tend to come off, be careful not to lose them.
- When the MP drive shaft gear Z17M07 and MP lift lever come off, assemble them as shown in the figure.

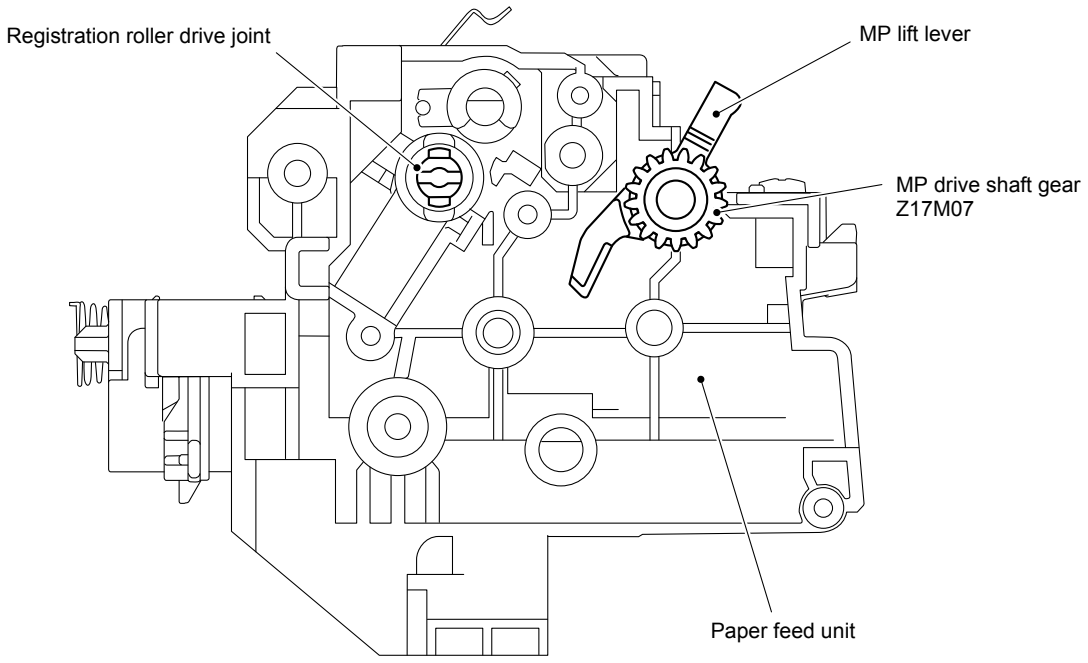

Fig. 3-143

(3) Release the Hook and remove the Separation roller bushing from the T1 drive shaft gear Z17M07.

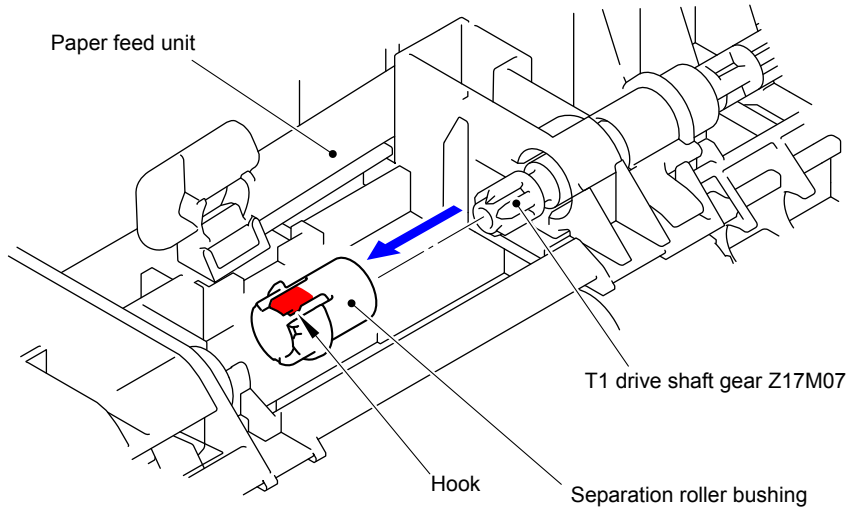

Fig. 3-144

(4) Remove the Edge actuator spring from the Hook of the Paper feed unit and the Hook of the Edge actuator.

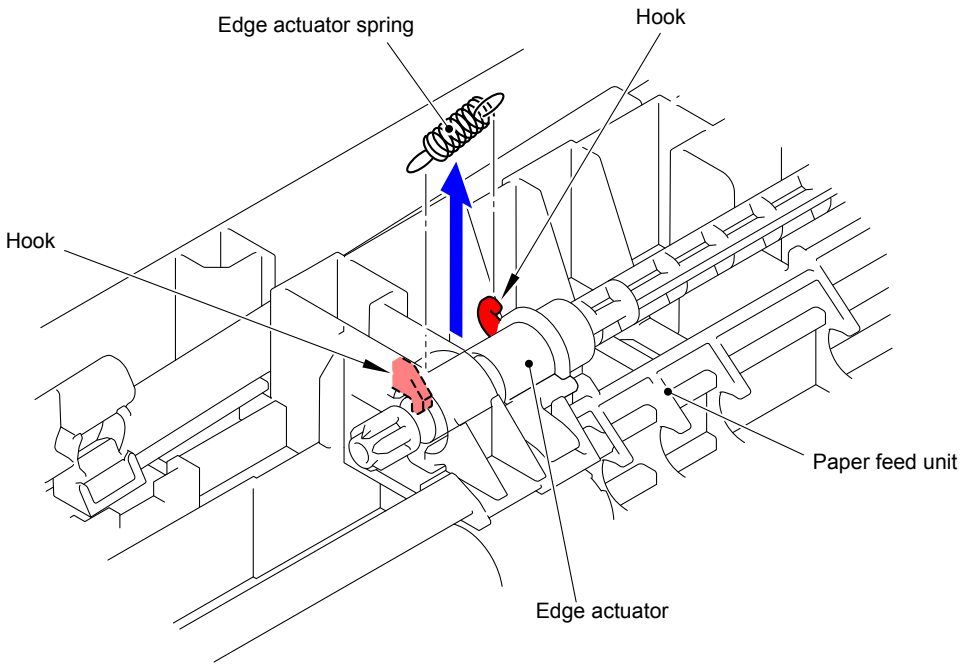

Fig. 3-145

(5) Pull out the T1 drive shaft gear Z17M07 from the Paper feed unit and remove the Edge actuator.

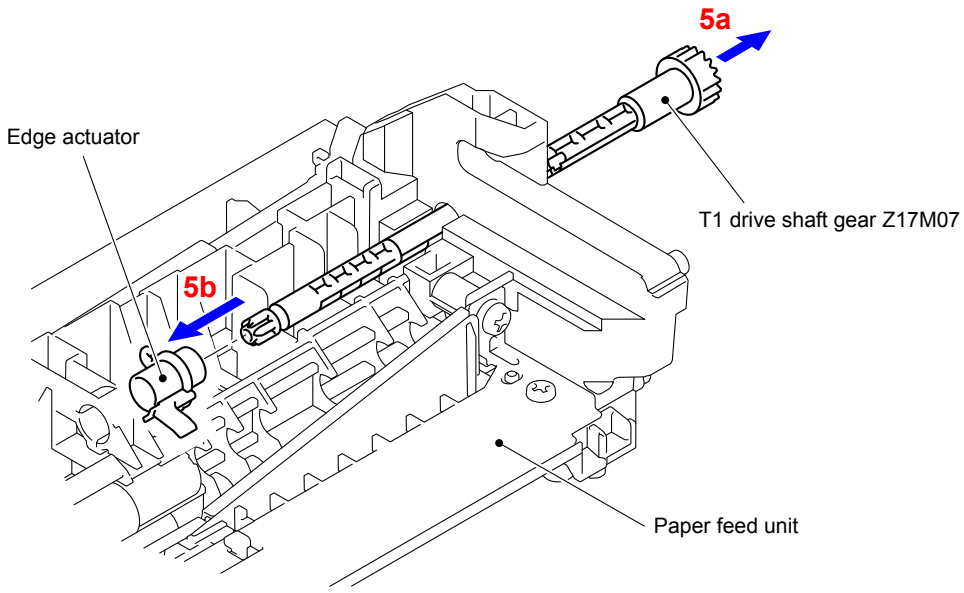

Fig. 3-146

(6) Release the wiring of the T1 paper feed sensor PCB ASSY.

(7) Release the three Hooks and remove the T1 paper feed sensor PCB ASSY from the Paper feed unit.

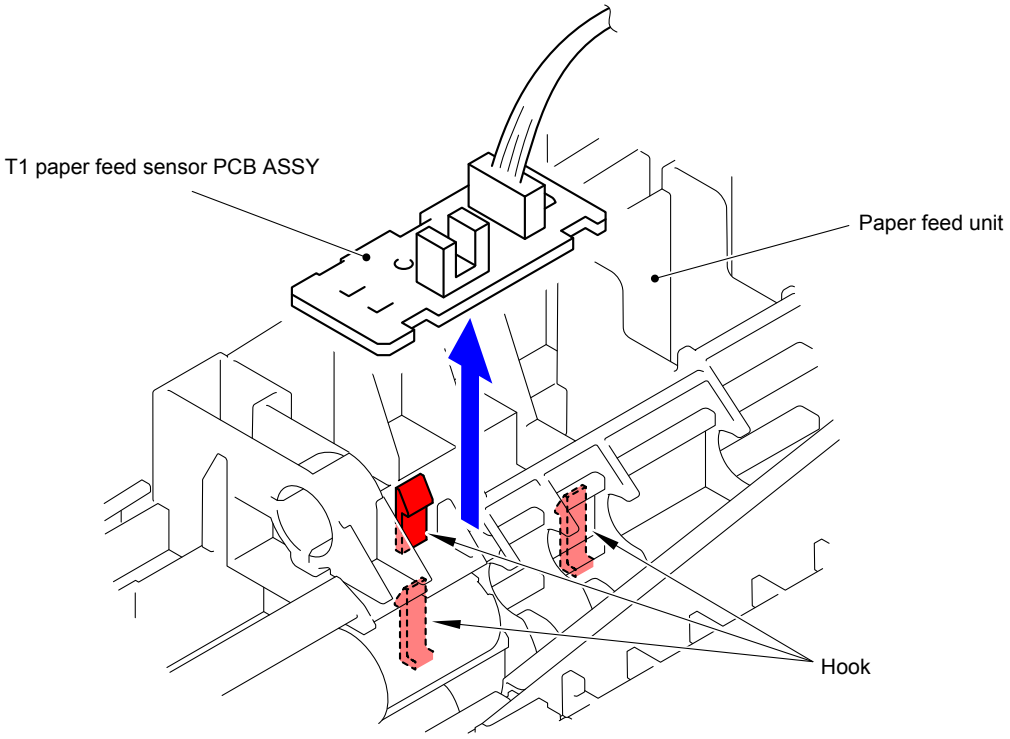

Fig. 3-147

Harness routing: Refer to “ 12 Paper Feed Unit”

9.40 High-voltage Power Supply PCB ASSY

(1) Remove the four Spacers from the Main frame R ASSY.

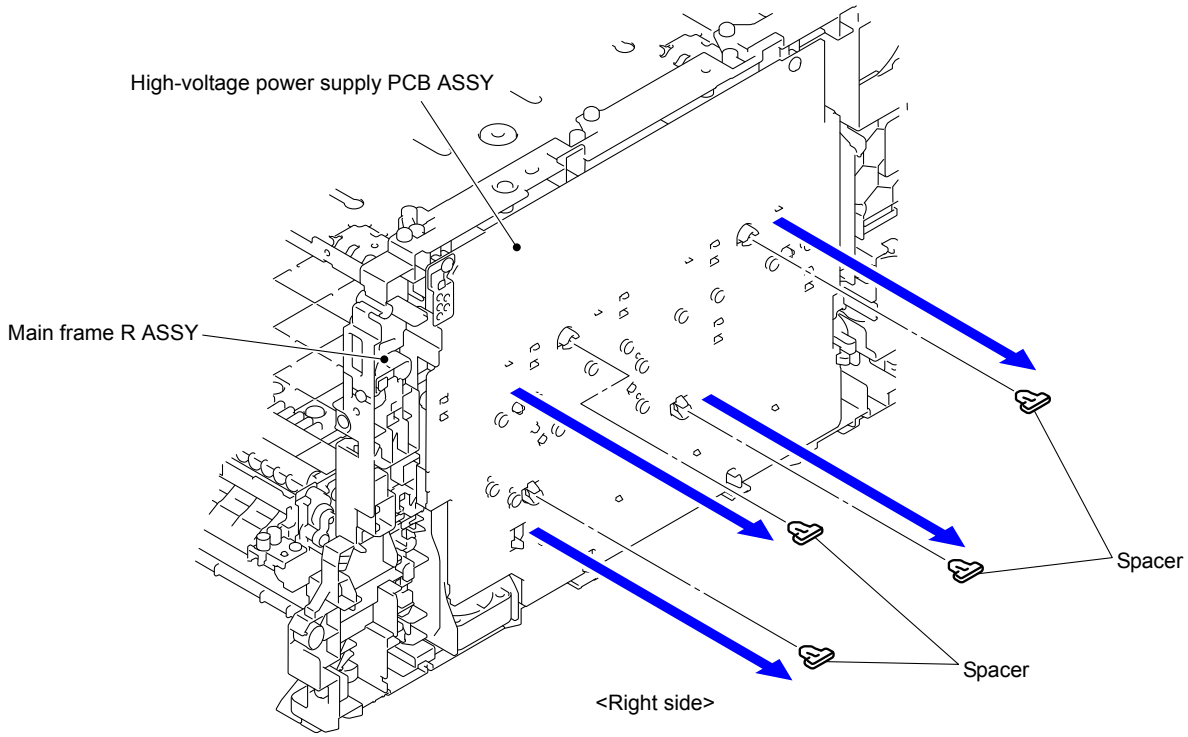

Fig. 3-148

(2) Disconnect the two Connectors (CN6 and CN7) from the High-voltage power supply PCB ASSY.

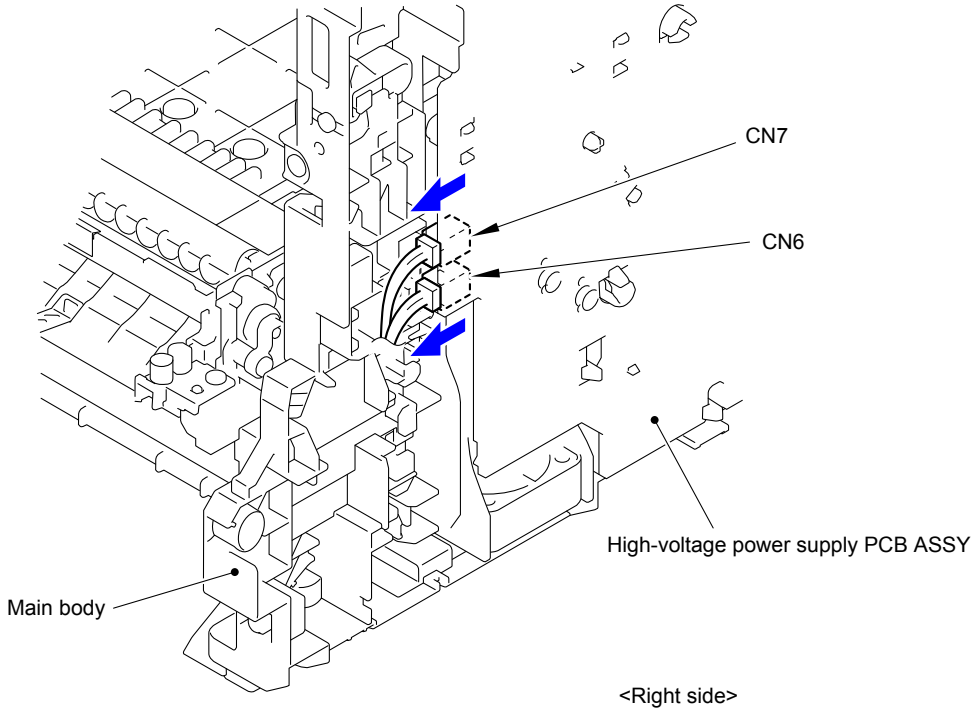

Fig. 3-149

(3) Remove the two Taptite pan B M3x10 screws from the High-voltage power supply PCB ASSY. Release the eight Hooks and remove the High-voltage power supply PCB ASSY from the Main body.

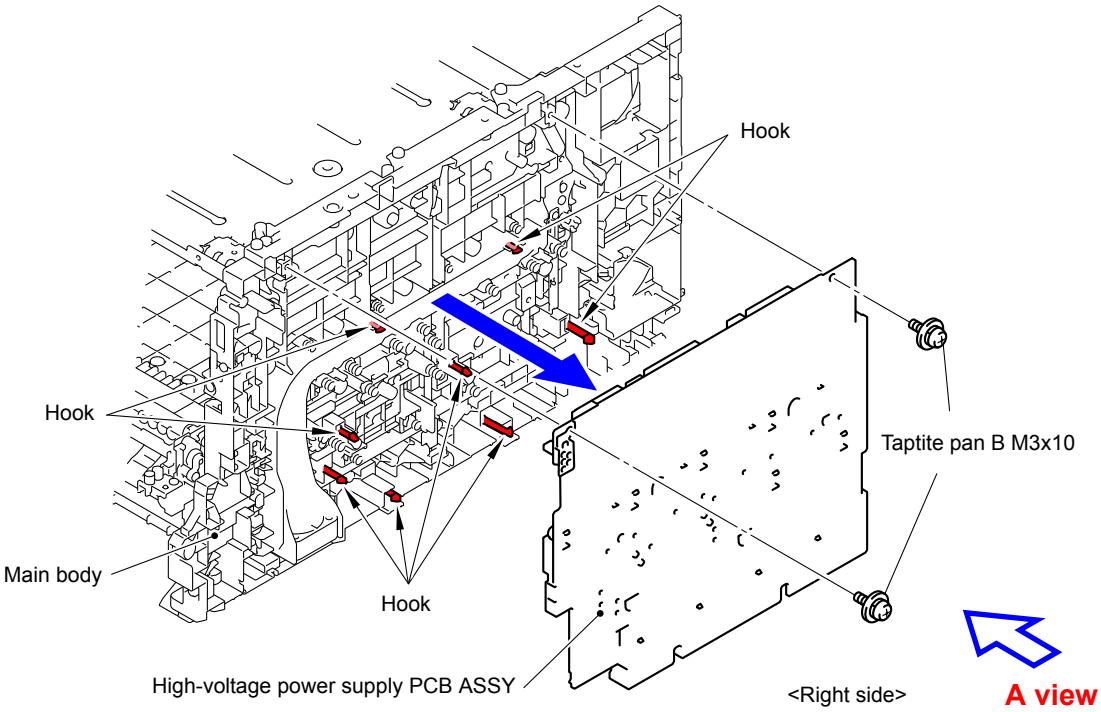

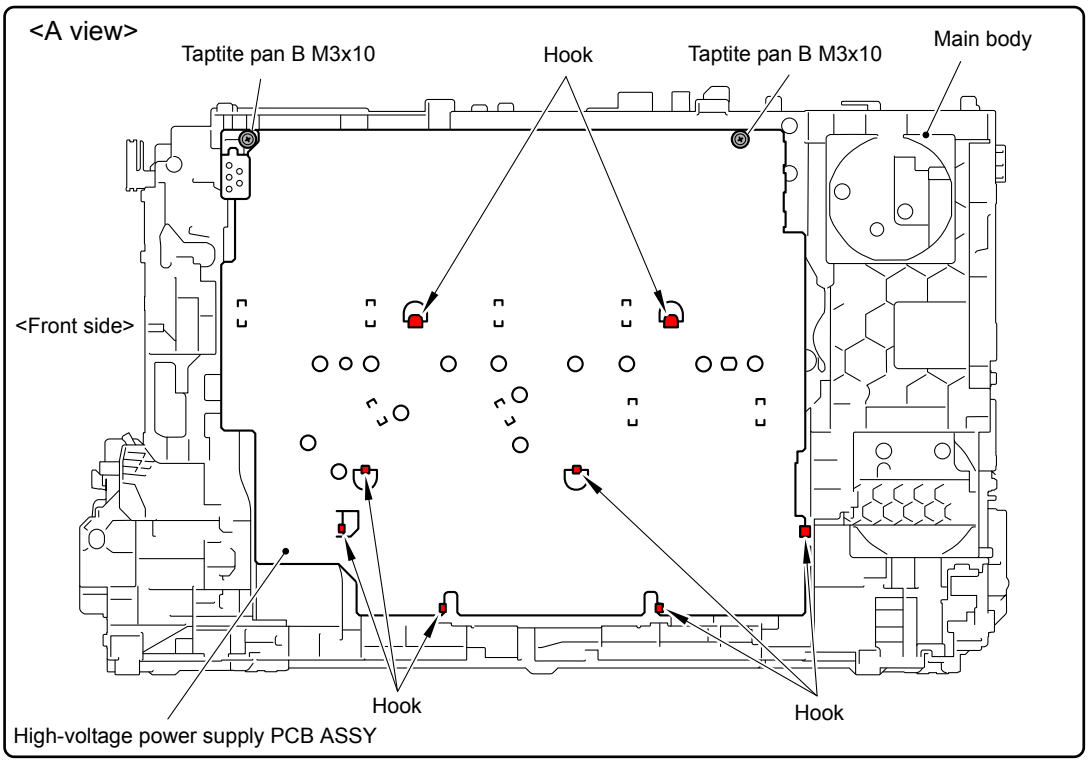

Fig. 3-150

Confidential

(4) Release the Hook and remove the HVPS shield ASSY from the High-voltage power supply PCB ASSY.

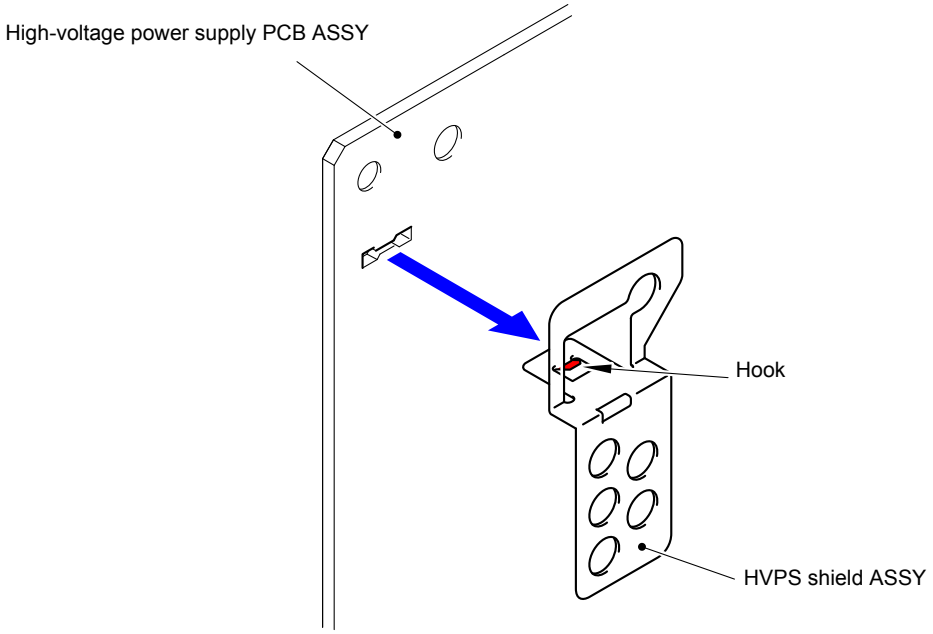

Fig. 3-151

Assembling Note:
After assembling the High-voltage power supply PCB ASSY, check that the Electrode inside the machine does not fall and that you do not feel that the Electrode gets caught when you press it.

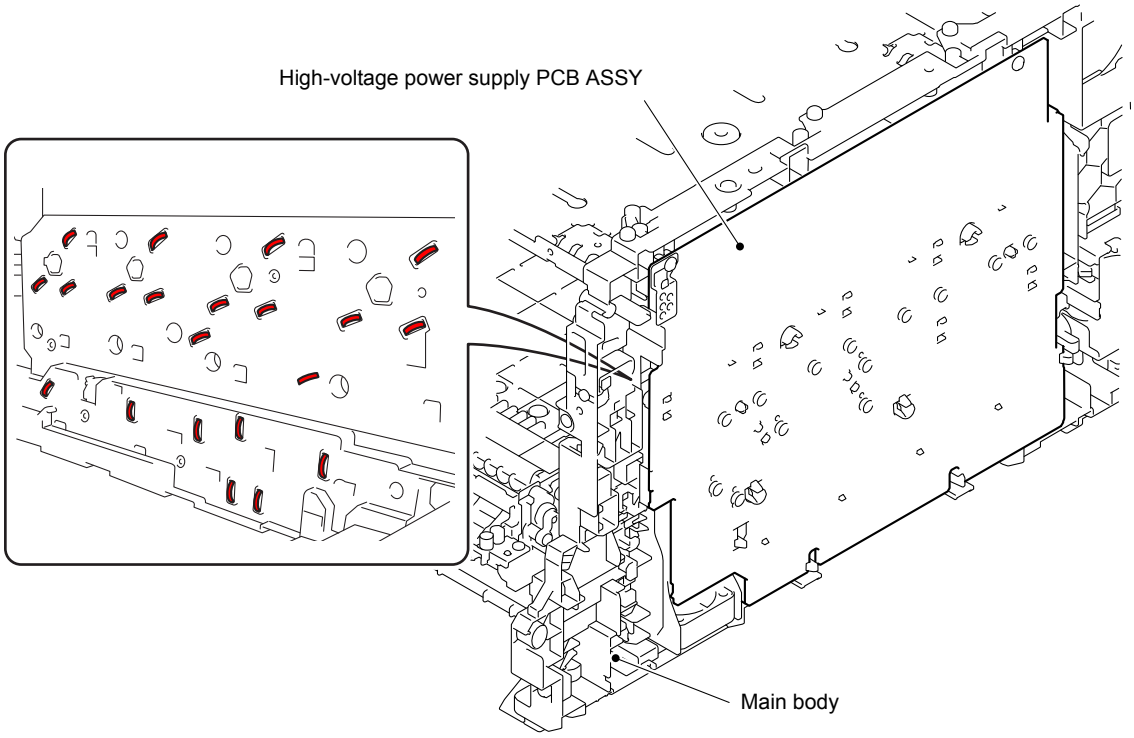

Fig. 3-152

9.41 Air Duct Film

(1) Remove the Air duct film from the Main frame R ASSY by peeling off the Double-sided adhesive tape.

Note:

- As the Air duct protector tends to come off, be careful not to lose it.
- When removing the Air duct film, replace the Air duct film with a new one.

Assembling Note:

When assembling the Air duct film to the Main frame R ASSY, affix it without making clearance between the Air duct film and Main frame R ASSY.

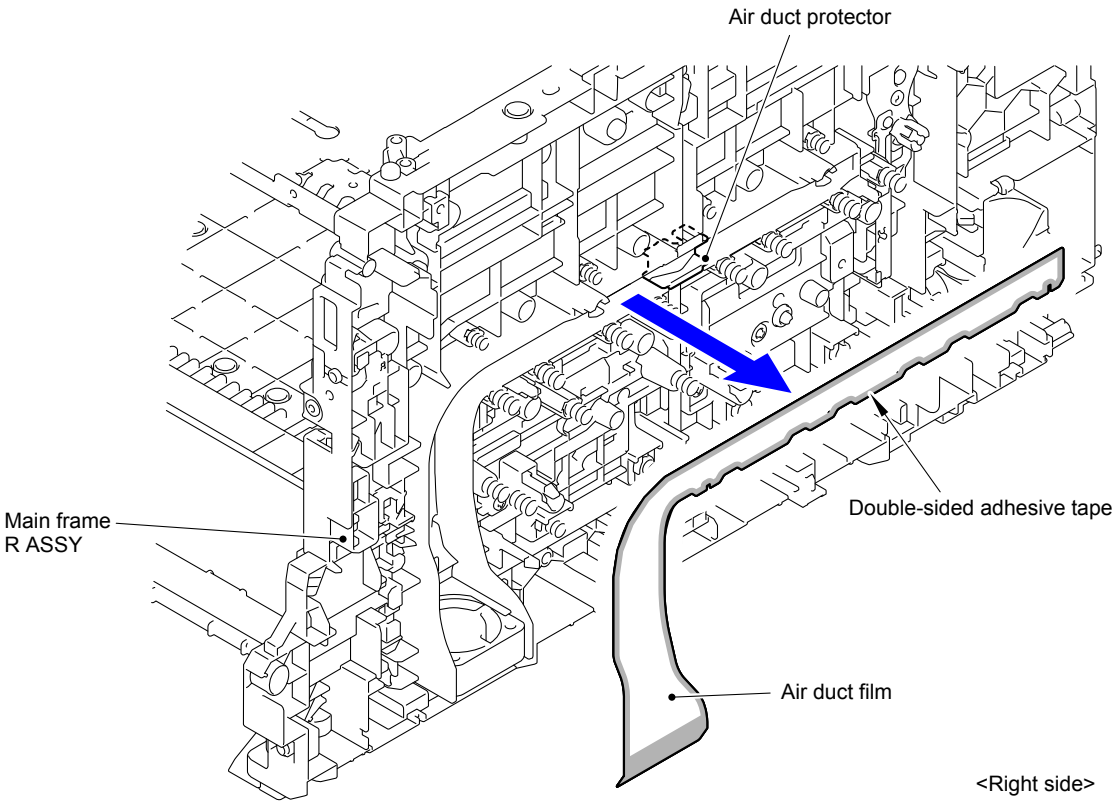

Fig. 3-153

9.42 Blower

(1) Release the wiring of the Blower.

(2) Remove the Blower from the Main frame R ASSY.

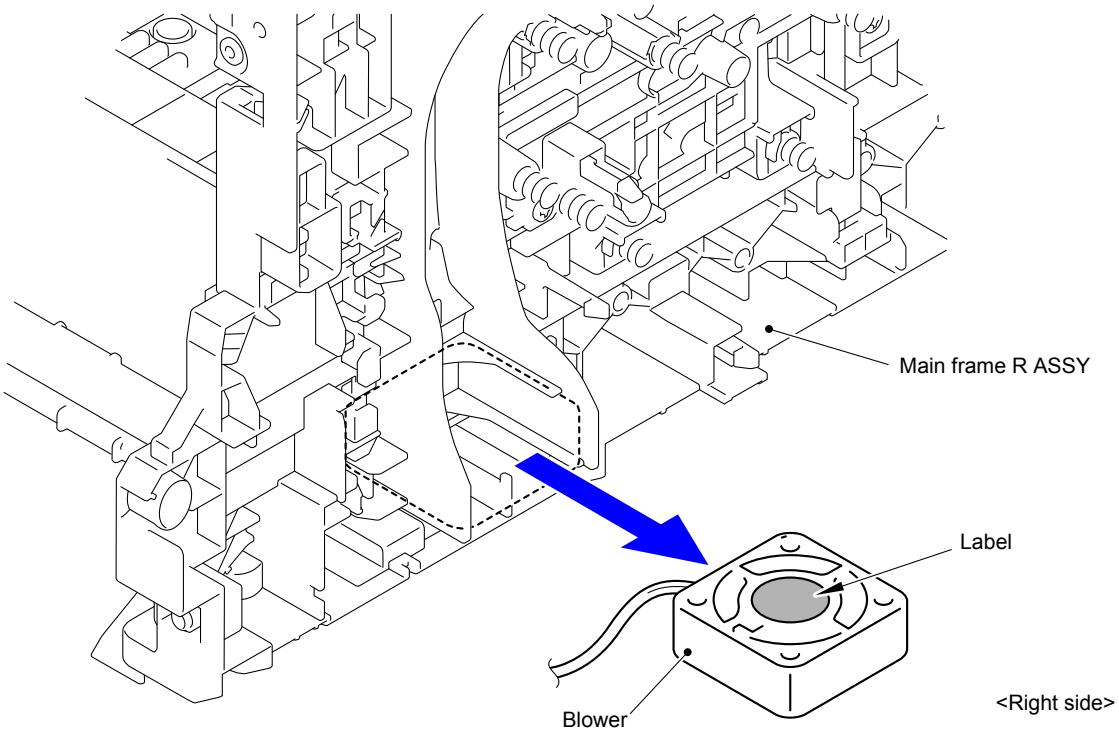

Fig. 3-154

Assembling Note:
When assembling the Blower, be sure to assemble it in a way that the label side faces out.

Harness routing: Refer to " 13 Blower, Waste Toner Sensor"

10. DISASSEMBLY PROCEDURE (LT-320CL/LT-325CL)

10.1 T2 Paper Tray Unit

(1) Take out the T2 paper tray unit from the main body.

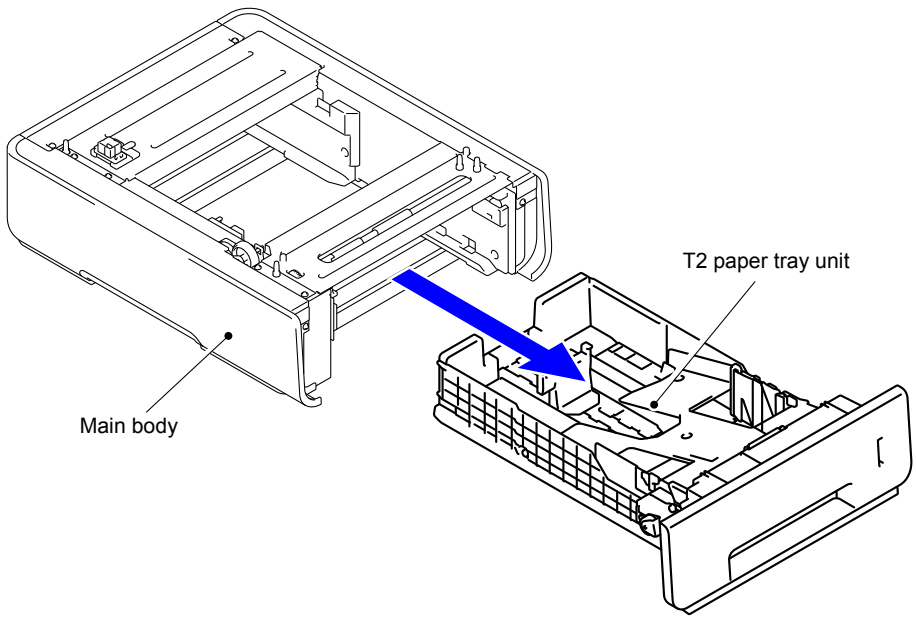

Fig. 3-155

Confidential

10.2 T2 Cover Rear

(1) Remove the two Taptite cup S M3x10 SR screws from the T2 cover rear.

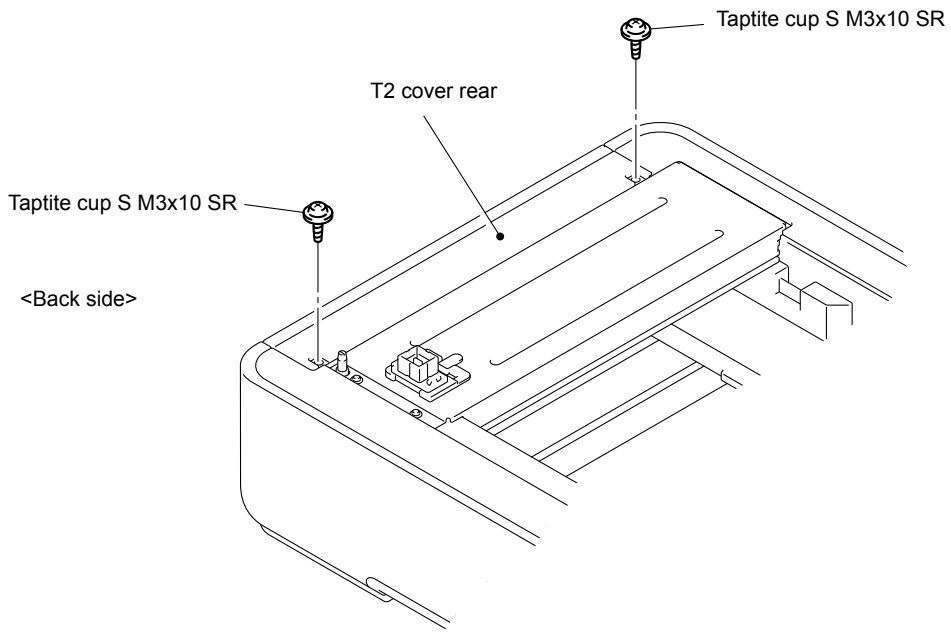

Fig. 3-156

(2) Release the two Pins and remove the T2 cover rear from the Main body.

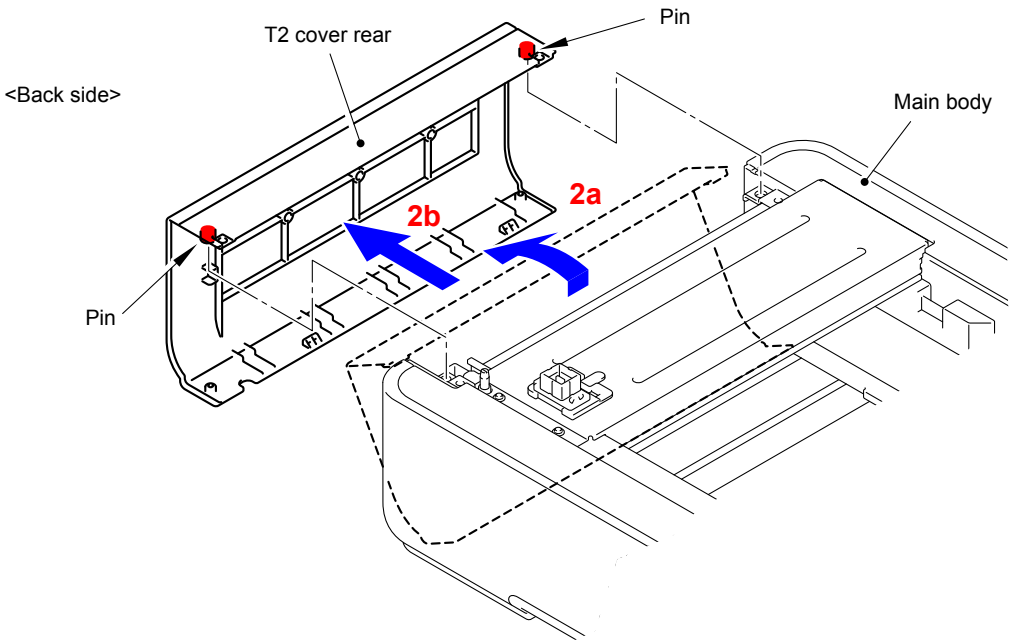

Fig. 3-157

10.3 T2 Cover Left

(1) Remove the two Taptite cup S M3x6 SR screws from the T2 cover left.

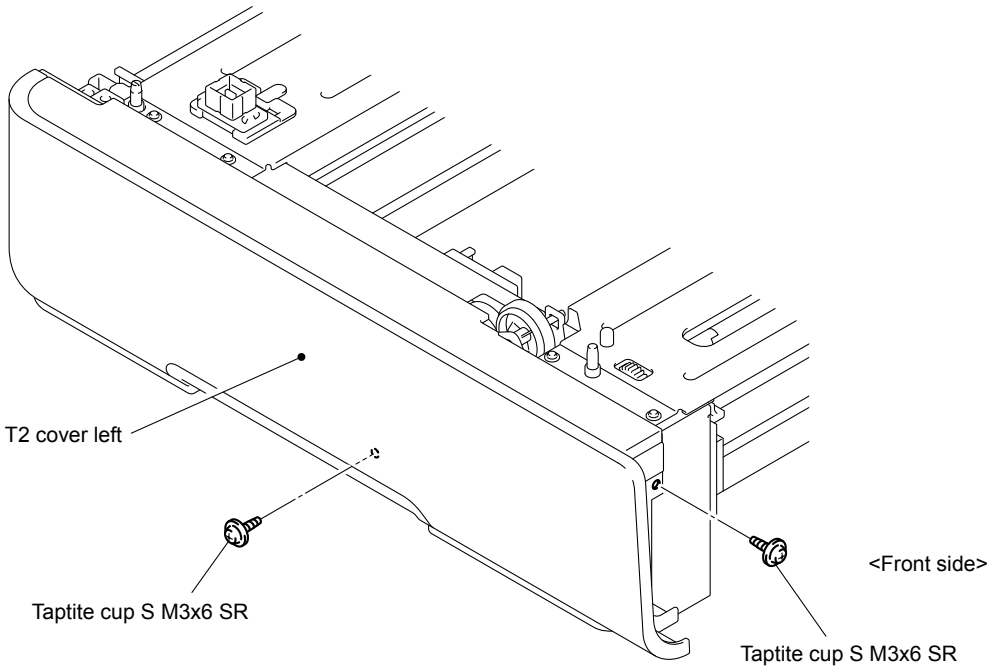

Fig. 3-158

(2) Release the one Pin and release the two Hooks at the top.

(3) Release the two Hooks at the bottom and remove the T2 cover left from the T2 frame L unit.

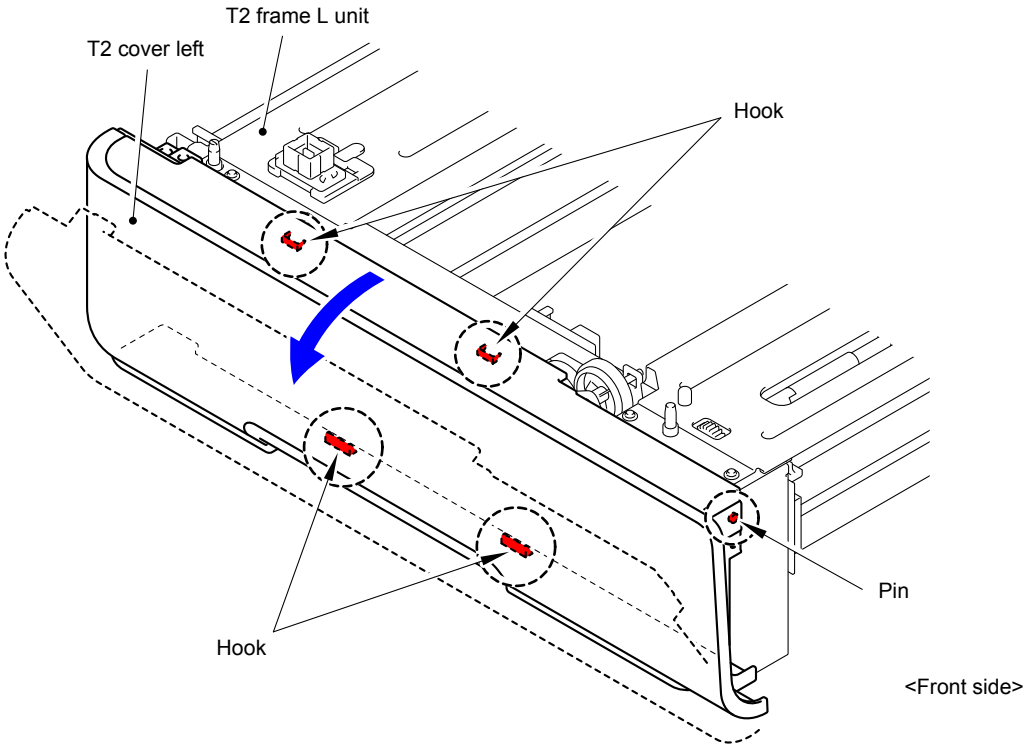

Fig. 3-159

10.4 T2 Cover Right

(1) Remove the two Taptite cup S M3x6 SR screws from the T2 cover right.

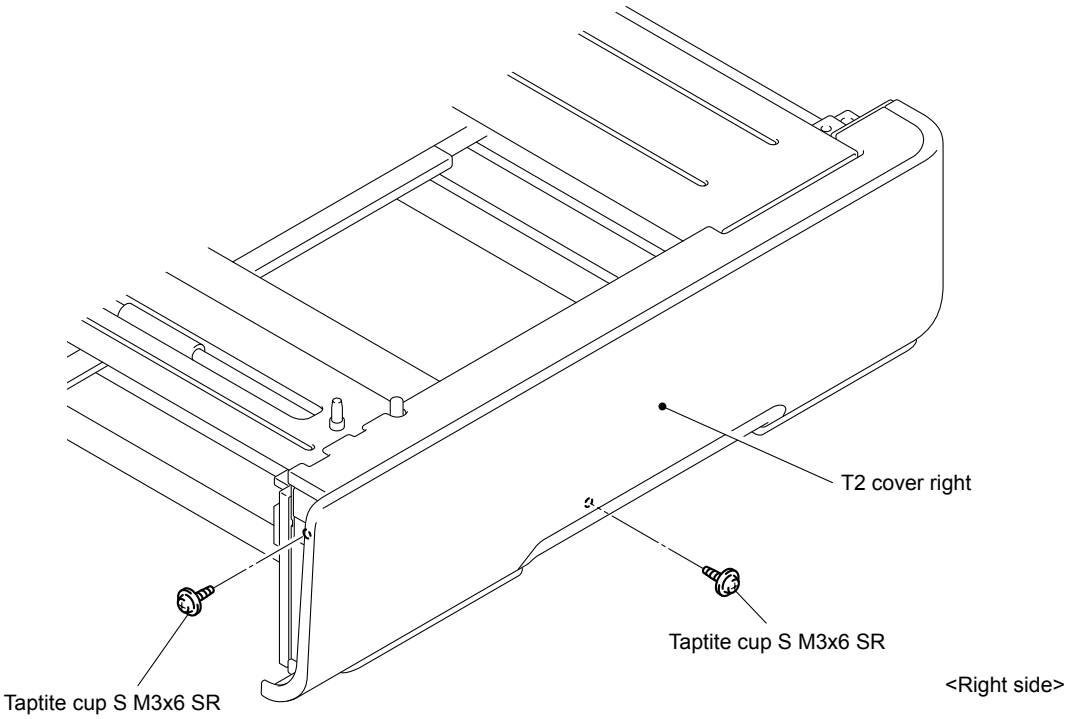

Fig. 3-160

(2) Release the one Pin and release the two Hooks at the top.

(3) Release the three Hooks at the bottom and remove the T2 cover right from the Main body.

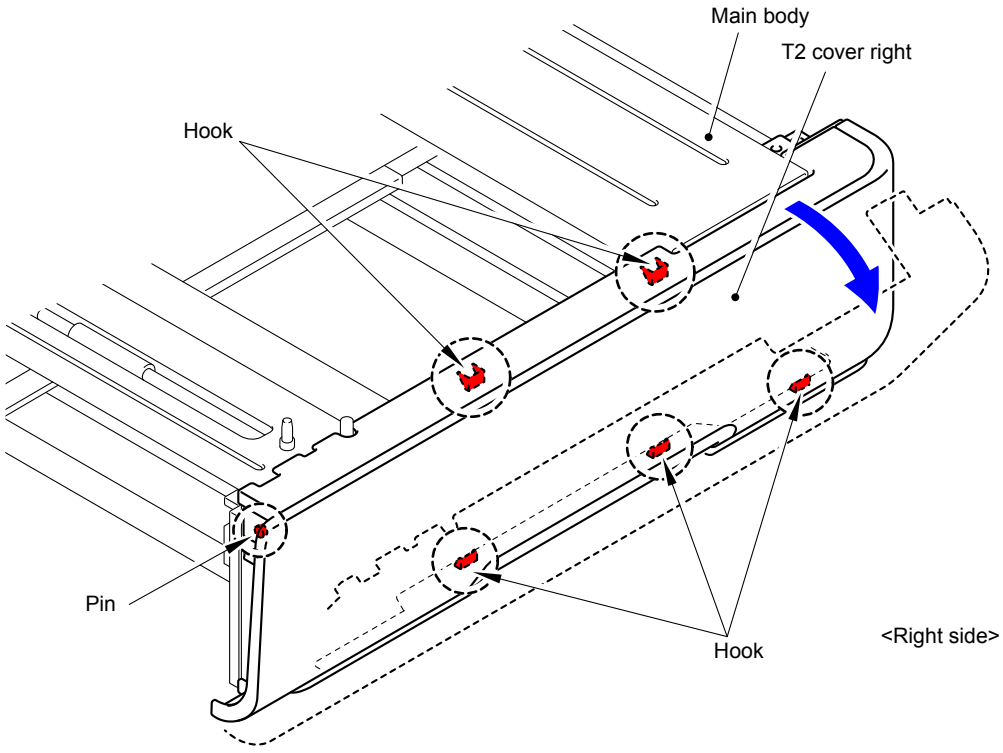

Fig. 3-161

10.5 T2 Relay PCB ASSY

(1) Disconnect all the Connectors from the T2 relay PCB ASSY.

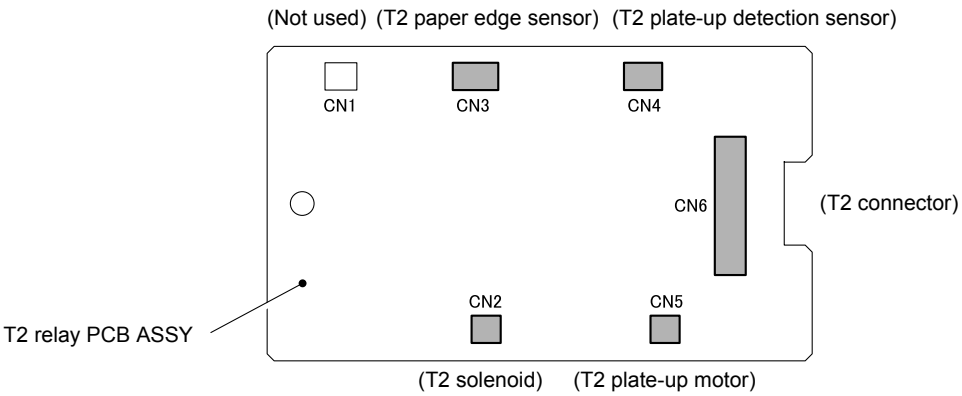

Fig. 3-162

(2) Remove the Taptite cup S M3x6 SR screw and remove the T2 relay PCB ASSY from the T2 frame L unit.

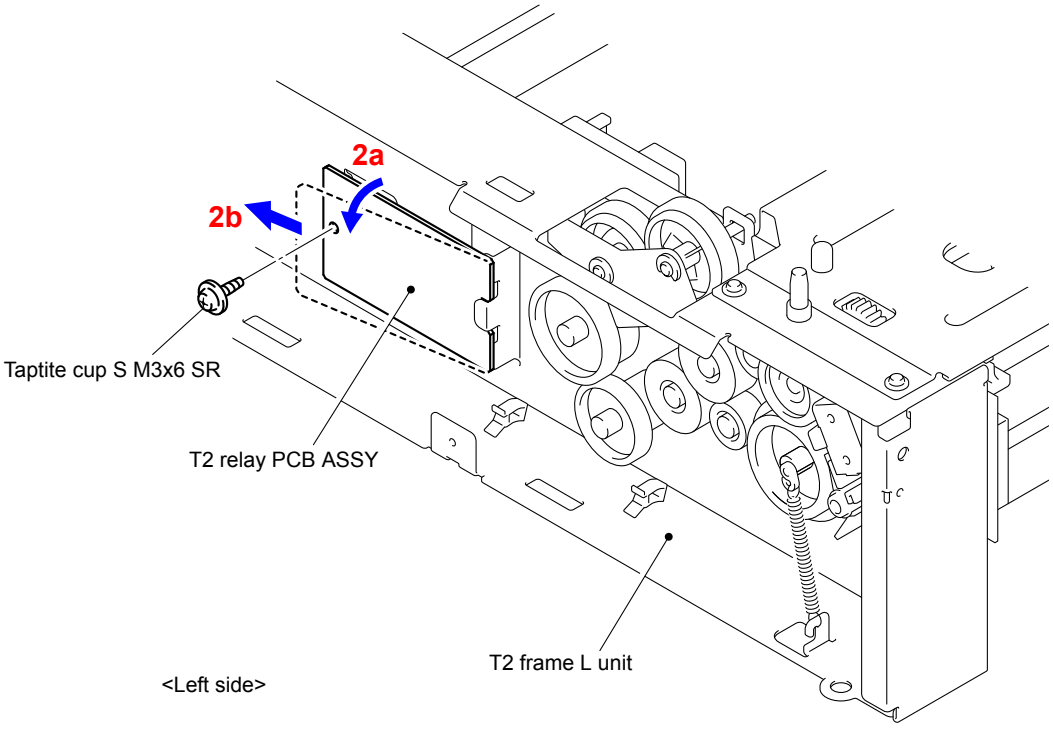

Fig. 3-163

Confidential

10.6 T2 Paper Feed Frame Unit/T2 Edge Actuator

(1) Remove the Clutch spring from the Clutch arm ASSY.

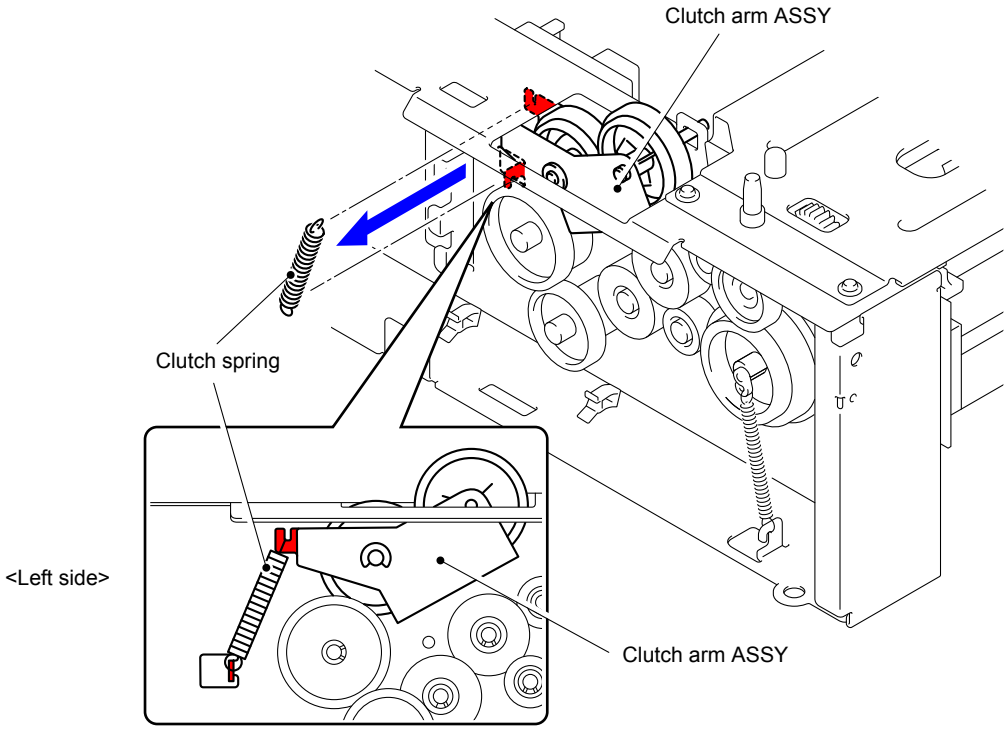

Fig. 3-164

(2) Release the Hook and remove the Gear 45/40 from the T2 frame L unit.

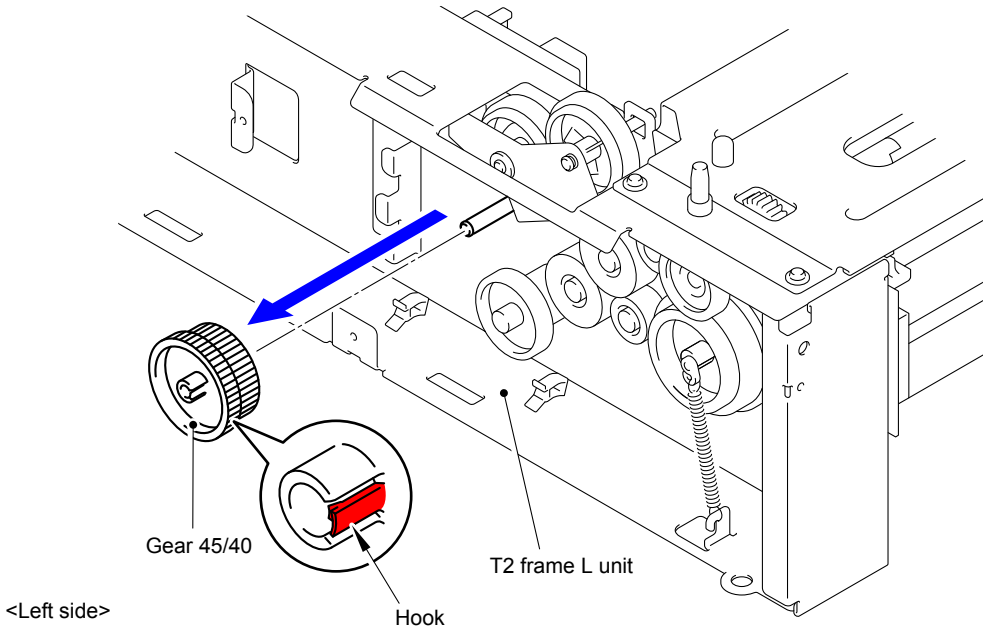

Fig. 3-165

Confidential

(3) Remove the Collar 6 from the Clutch arm ASSY.

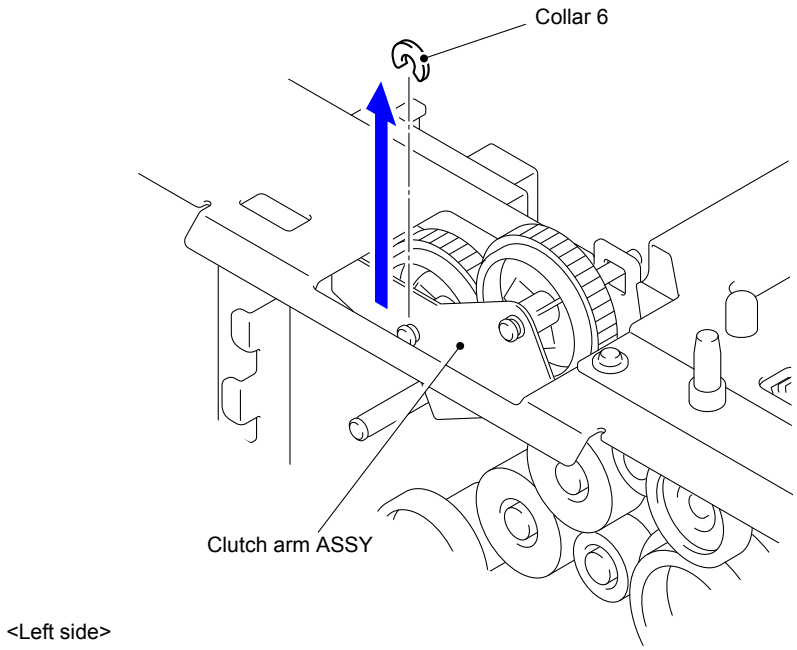

Fig. 3-166

(4) Remove the Clutch arm ASSY from the T2 frame L unit.

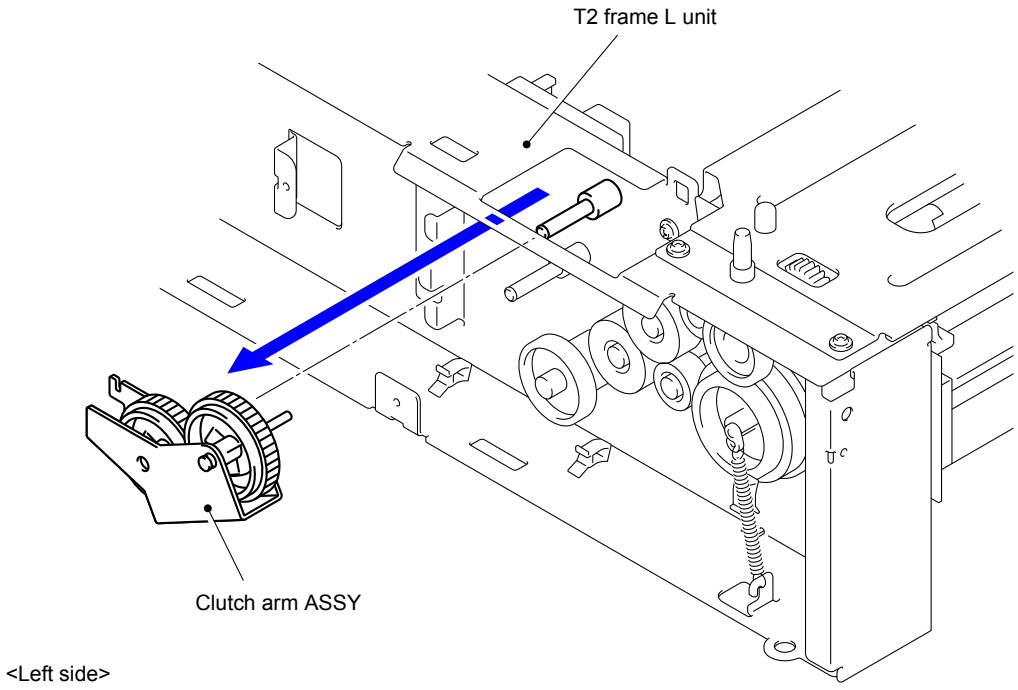

Fig. 3-167

(5) Remove the five Taptite cup S M3x6 SR screws and remove the T2 beam F ASSY from the Main body.

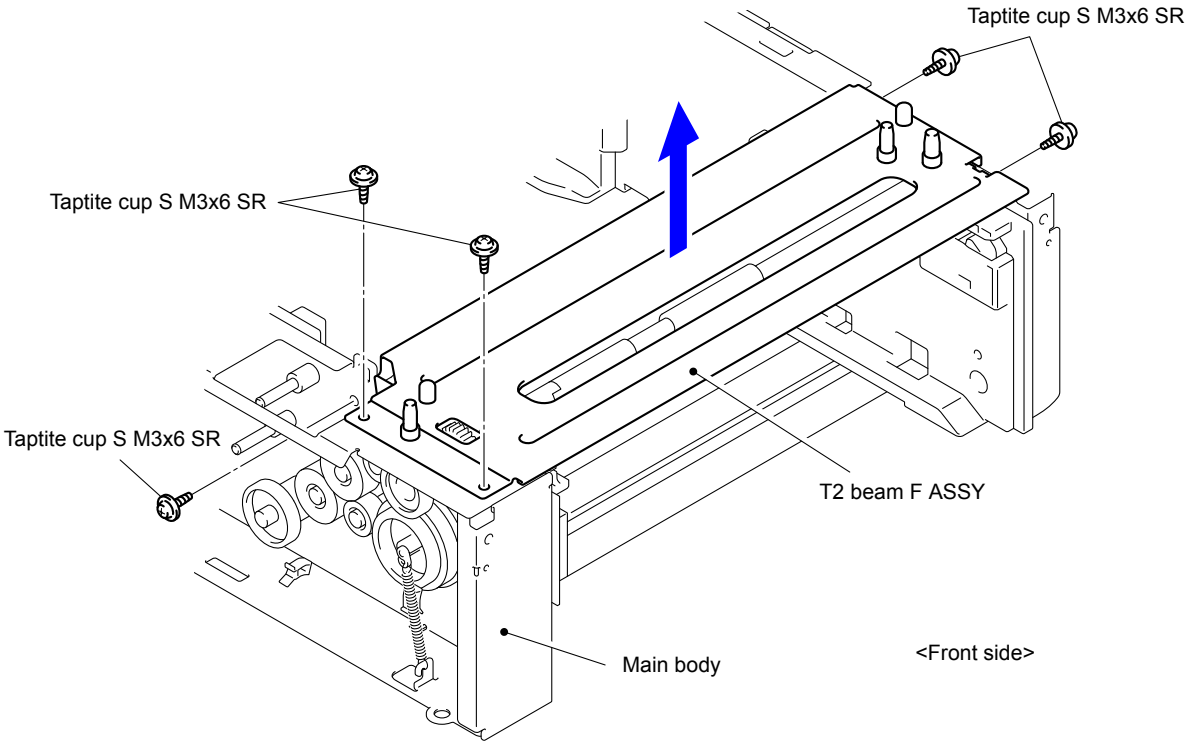

Fig. 3-168

(6) Remove the Retaining ring E4 from the Feed roller and remove the Gear 24 and Feed roller bushing.

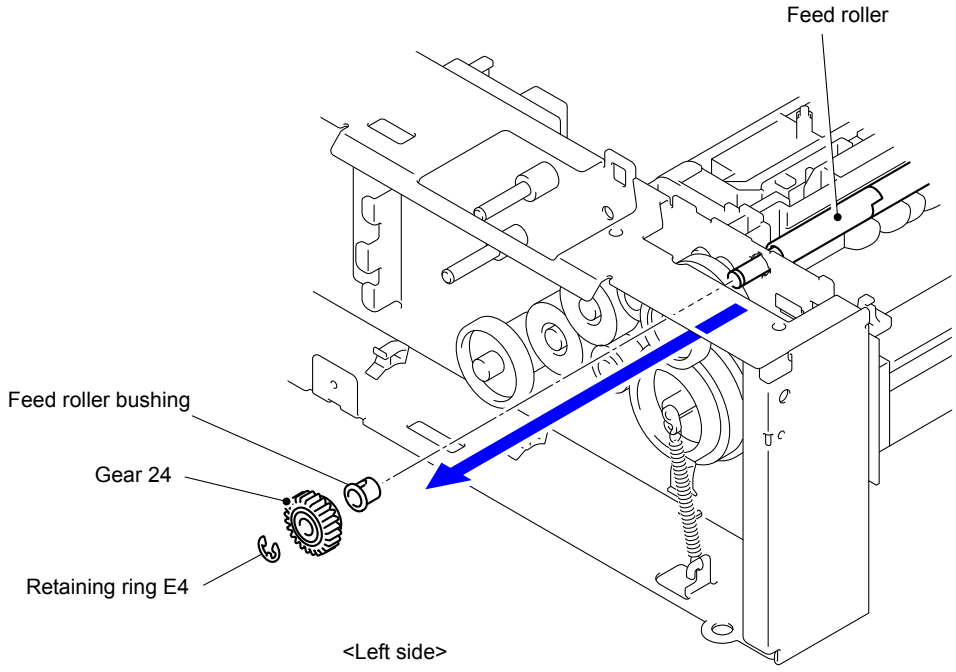

Fig. 3-169

(7) Remove the Retaining ring E3 from the Feed roller and remove the Feed roller bushing TR.

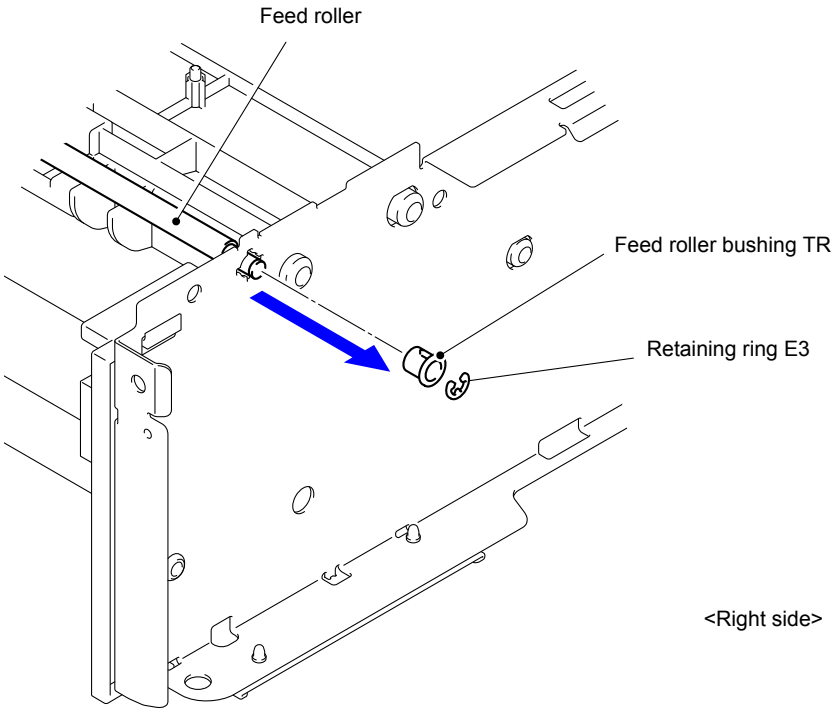

Fig. 3-170

(8) Remove the Lift spring from the Hook of the Lift lever A.

(9) Remove the Feed roller from the Main body in the directions of the arrows 9a, 9b, and 9c in this order.

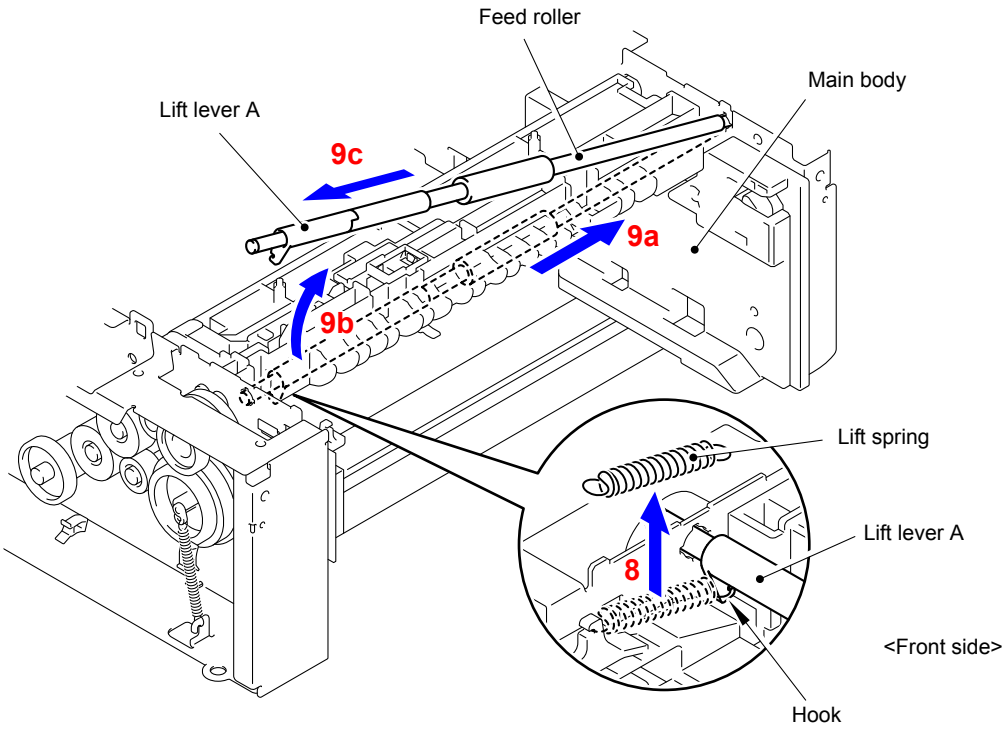

Fig. 3-171

Assembling Note:

When assembling the Feed roller, be sure to assemble it in a way that the Rib of the T2 paper feed frame unit comes between “A” and “B” of the Lift lever B, and the lever of the T2 paper feed holder comes in front of “B”.

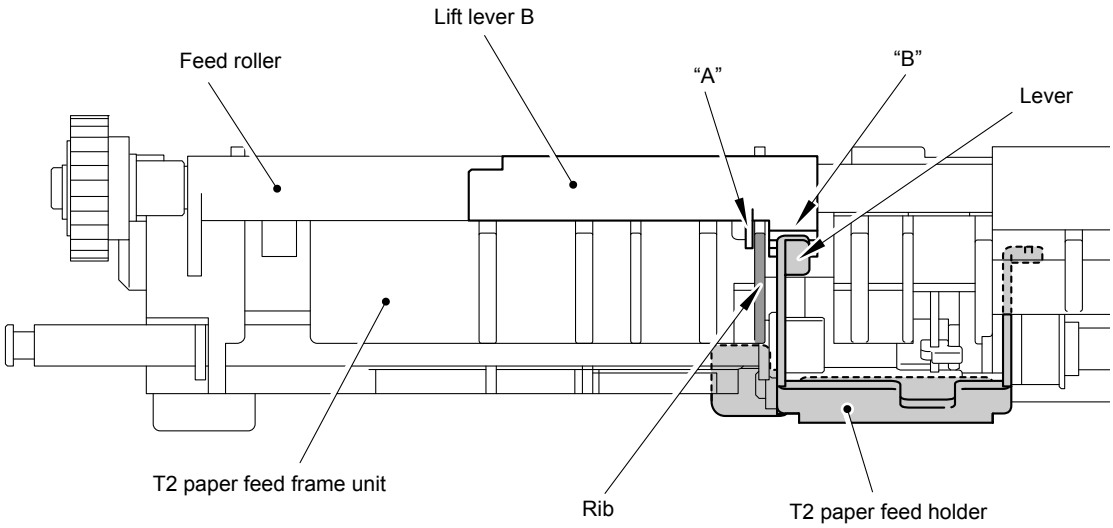

Fig. 3-172

(10) Release the Hook and remove the Gear 20A from the T2 frame L unit.

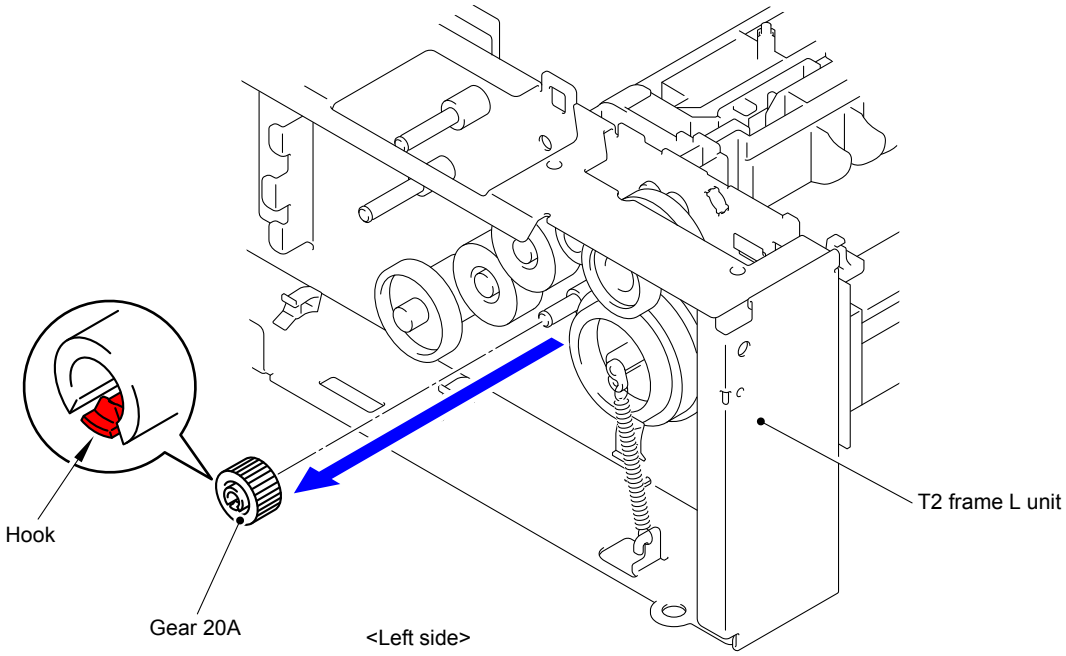

Fig. 3-173

(11) Release the Hook and remove the Gear 33 from the T2 frame L unit.

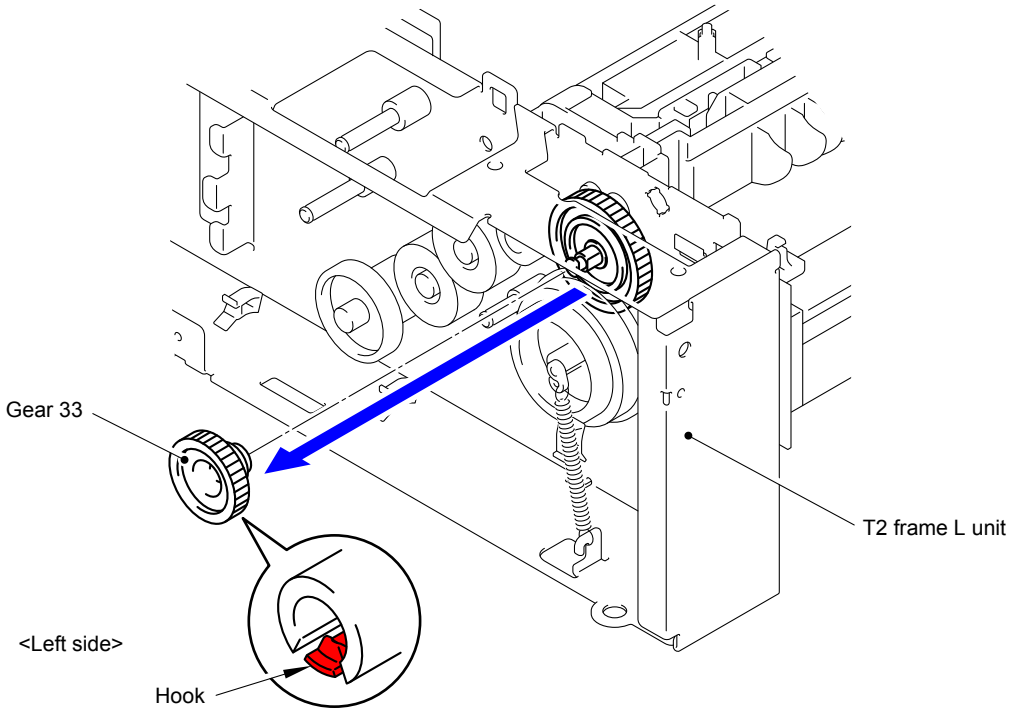

Fig. 3-174

(12) Remove the Extension spring from the Spring hook.

(13) Release the Hook and remove the Gear 46/55 from the T2 frame L unit.

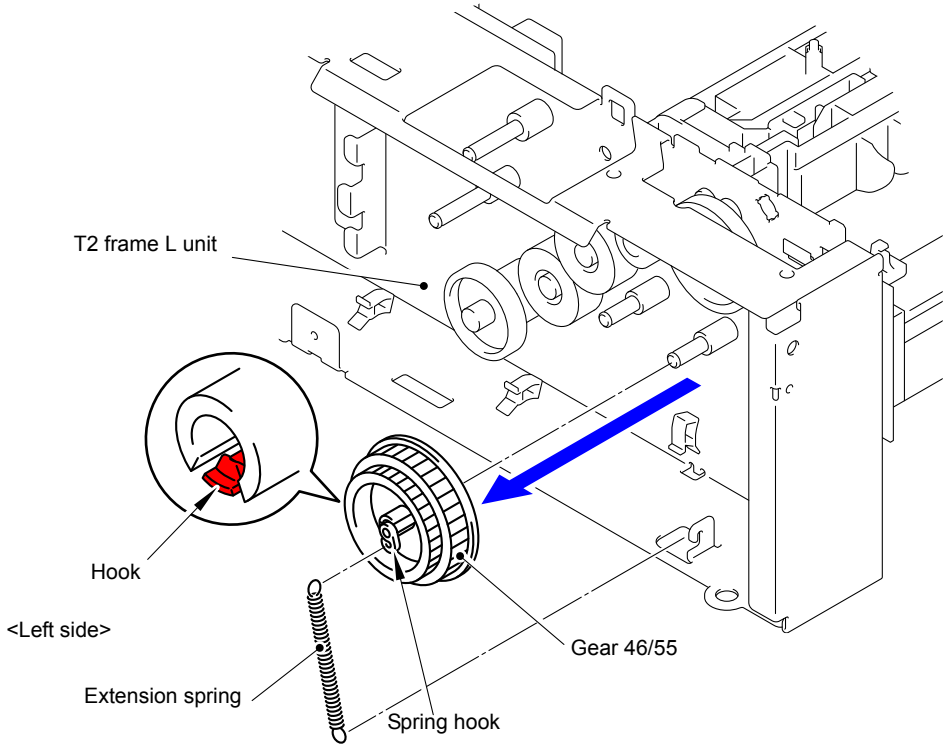

Fig. 3-175

Confidential

(14) Remove the Taptite cup S M3x6 SR screw and remove the T2 solenoid holder ASSY from the T2 frame L unit.

(15) Remove the Gear 46 from the T2 frame L unit.

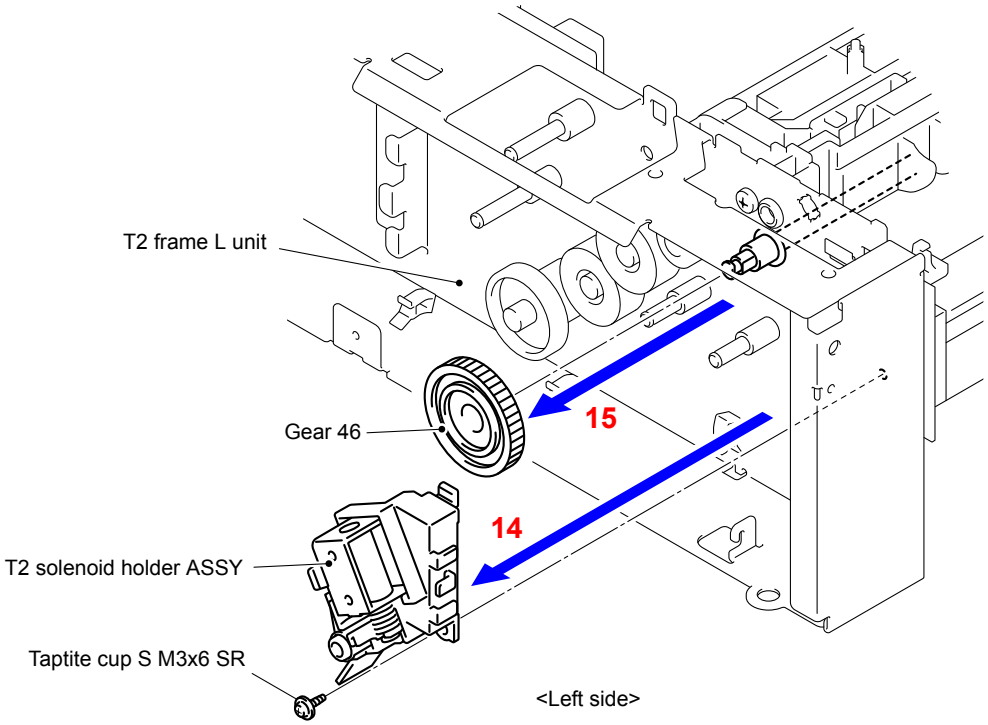

Fig. 3-176

(16) Turn the T2 frame L unit upside down.

(17) Remove the two Taptite cup S M3x6 SR screws from the T2 beam front.

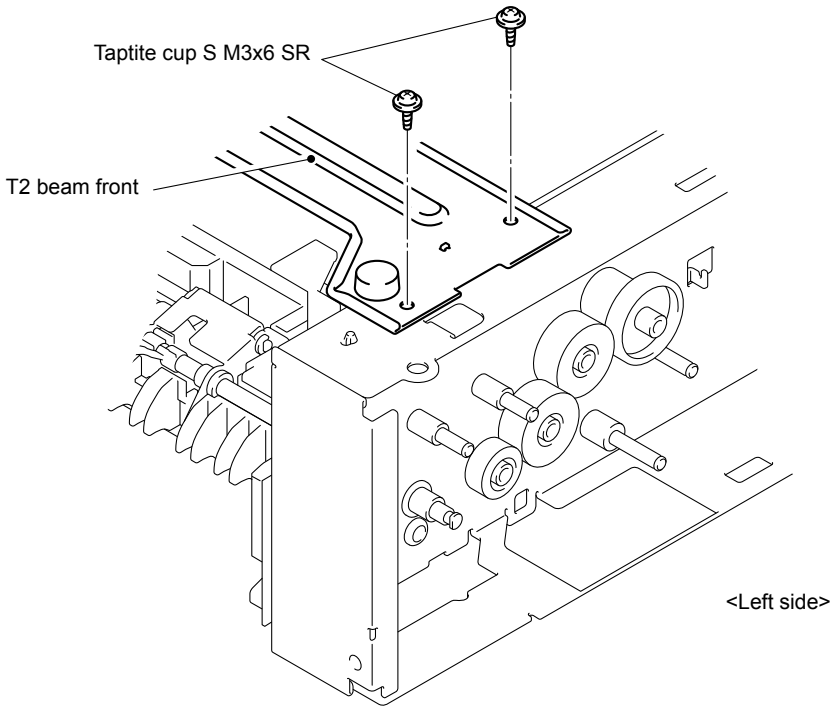

Fig. 3-177

(18) Turn the T2 frame L unit right side up.

(19) Remove the two Taptite cup S M3x6 SR screws from the T2 beam rear.

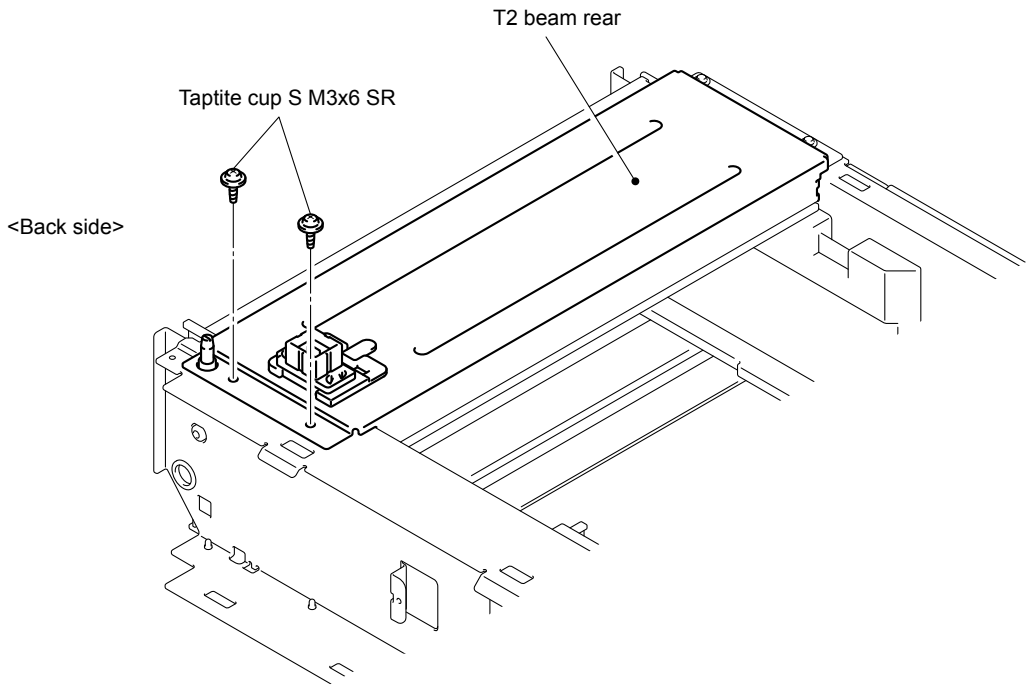

Fig. 3-178

(20) Remove the two Taptite cup S M3x6 SR screws from the T2 beam rear.

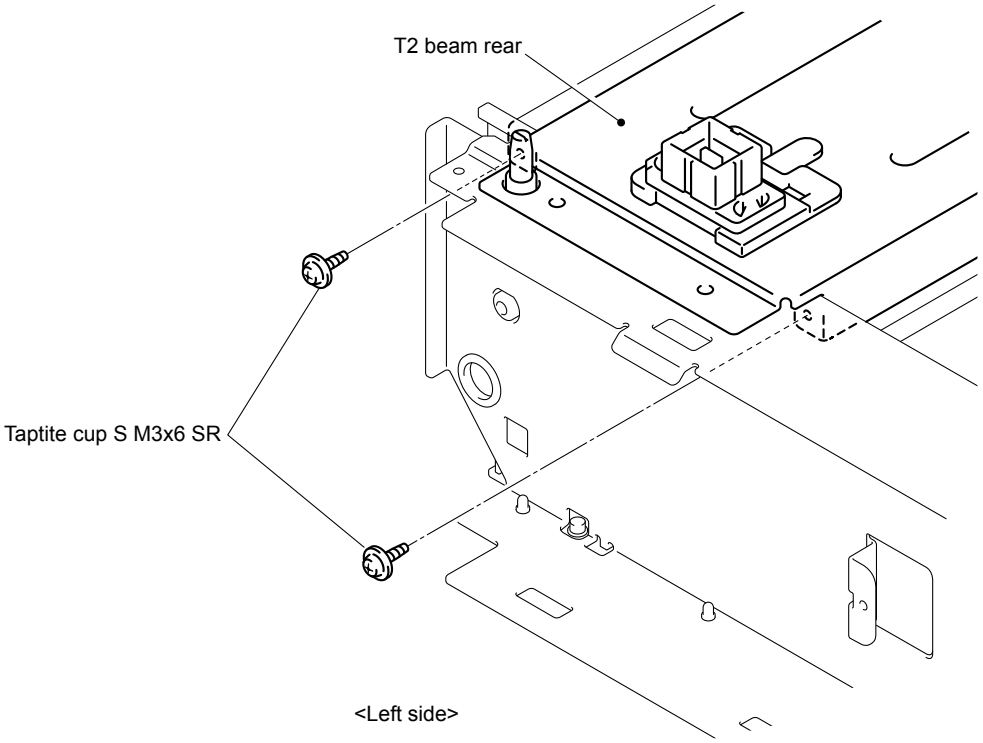

Fig. 3-179

(21) Remove the Taptite bind B M4x10 screw and Bush from the T2 frame L unit.

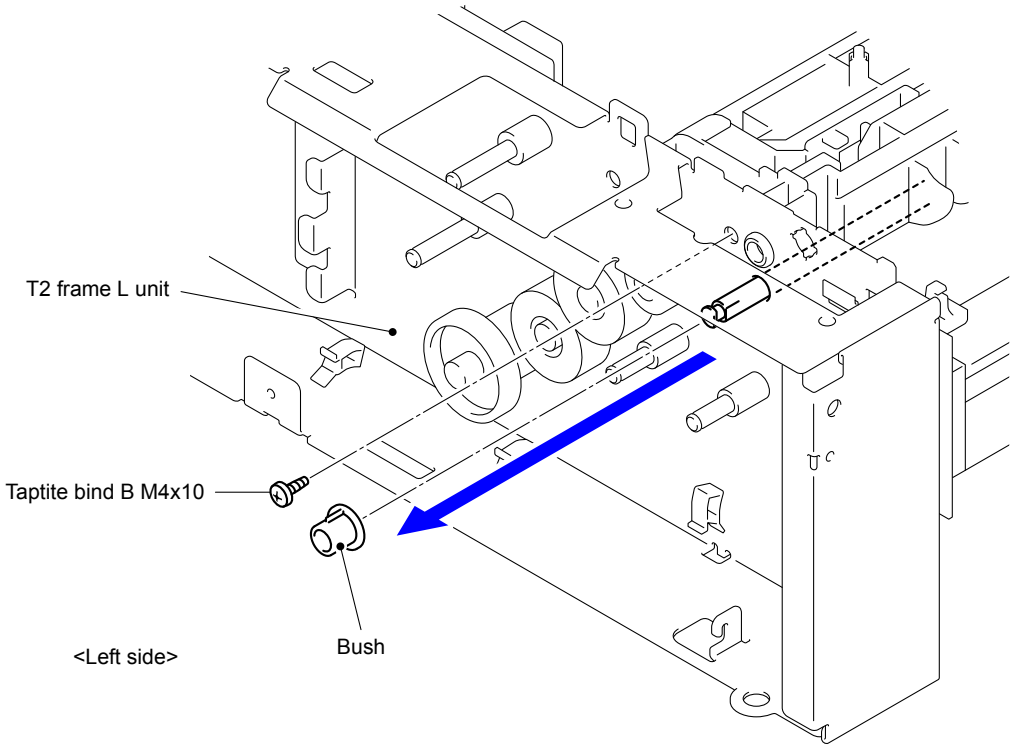

Fig. 3-180

(22) Remove the T2 paper feed frame unit from the Main body in the order of the arrow 22a and arrow 22b.

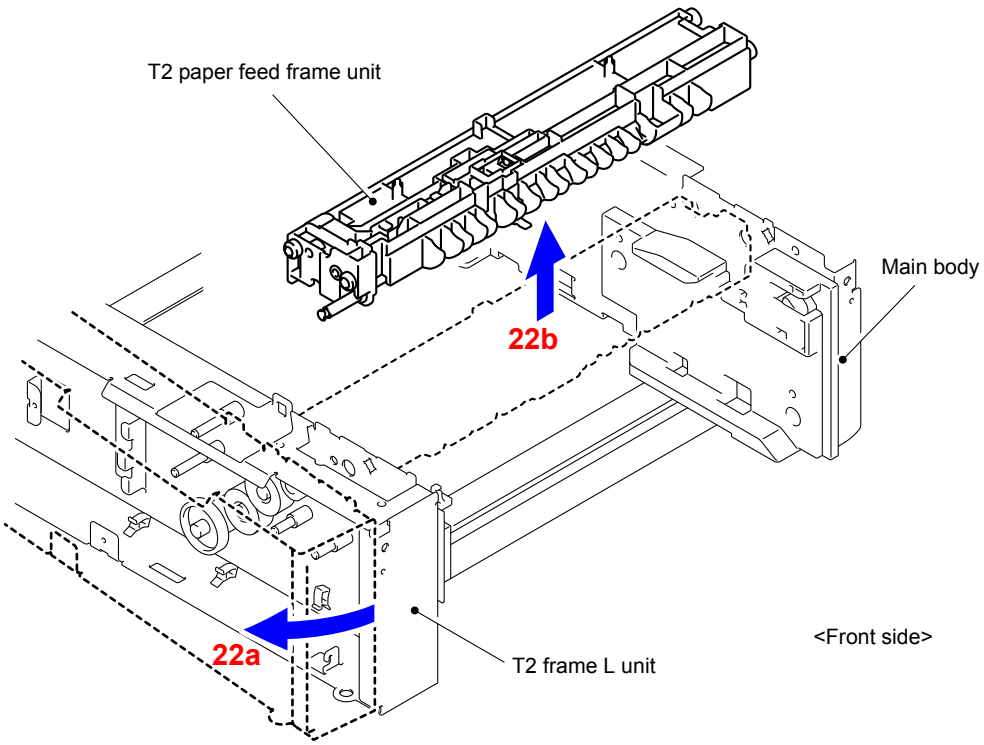

Fig. 3-181

(23) Release the Hook and slide the T2 separation roller ASSY in the direction of the arrow.

(24) Rotate the T2 separation roller ASSY in the direction of the arrow 24a. Remove the T2 separation roller ASSY from the T2 paper feed drive shaft in the direction of the arrow 24b.

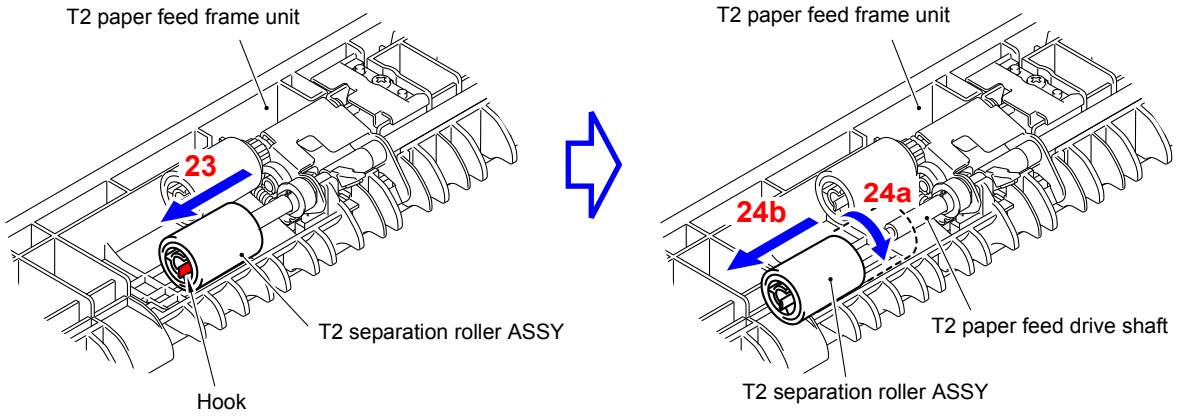

Fig. 3-182

Assembling Note:

When assembling the T2 separation roller ASSY, assemble it by sliding it in the direction of the arrow b as rotating the T2 separation roller ASSY in the direction of the arrow a.

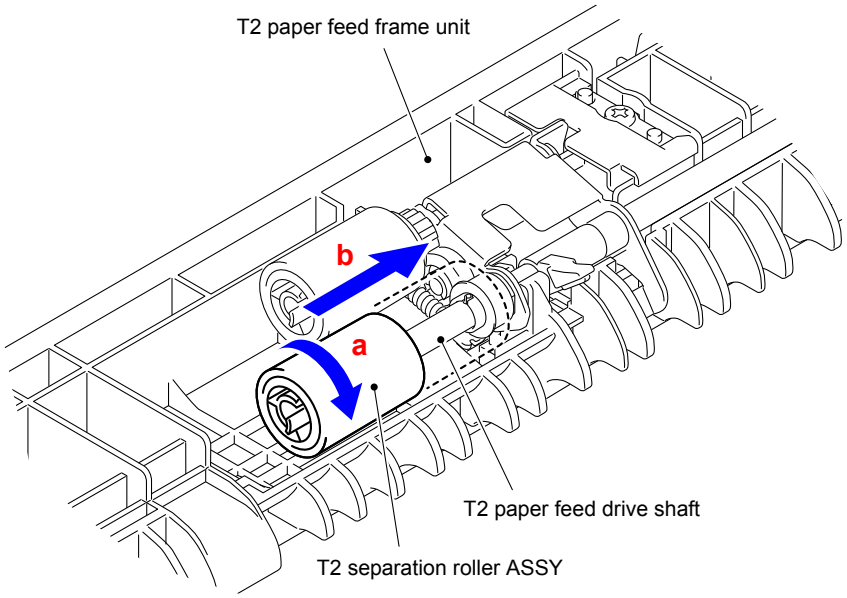

Fig. 3-183

(25) Release the Hook and remove the T2 paper pick-up roller ASSY from the T2 paper feed drive shaft.

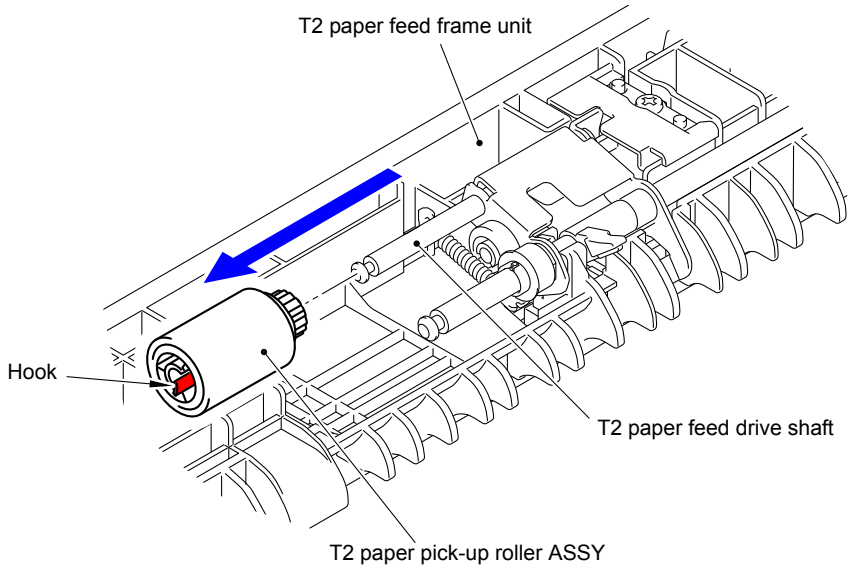

Fig. 3-184

(26) Remove the “A” of the T2 edge actuator spring from the Hook of the T2 paper feed frame unit.

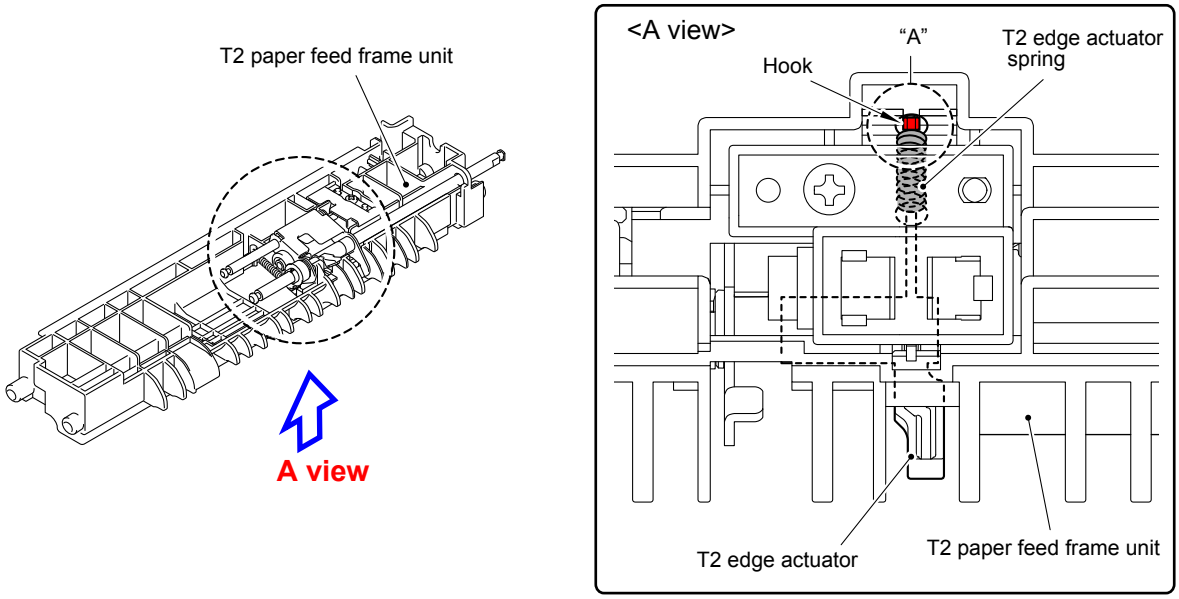

Fig. 3-185

Confidential

(27) Remove the T2 paper feed spring from the Hook of the T2 paper feed frame unit and the Hook of the T2 paper feed holder ASSY.

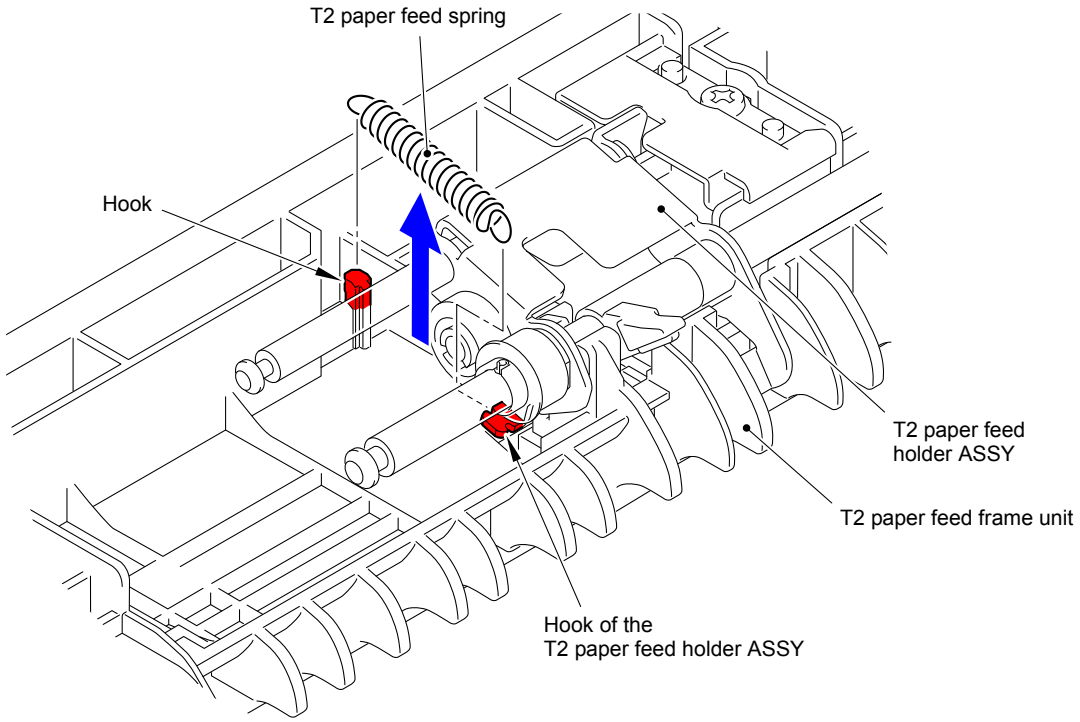

Fig. 3-186

(28) Remove the two Collar 6s from the T2 paper feed drive shaft.

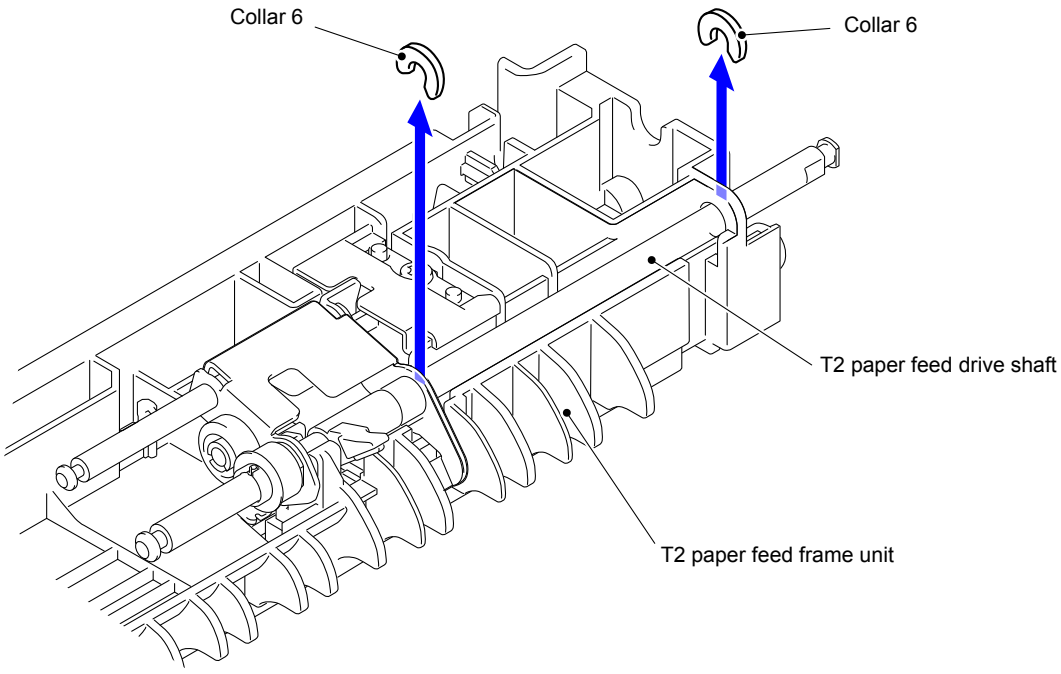

Fig. 3-187

(29) Slide the T2 paper feed drive shaft in the direction of the arrow 29a and remove the T2 paper feed holder bushing from the T2 paper feed holder ASSY.

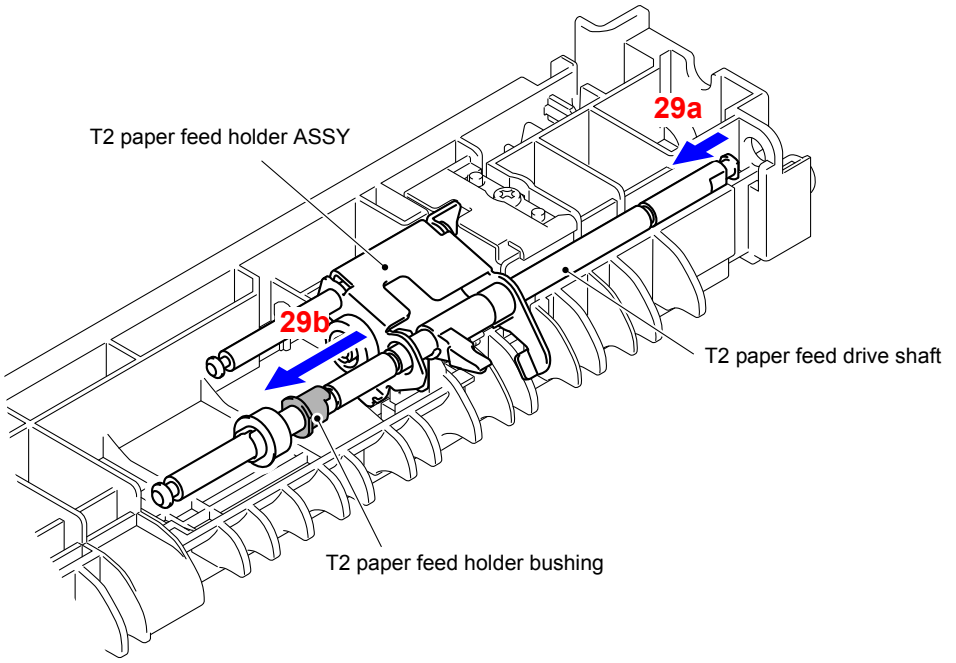

Fig. 3-188

(30) Remove the T2 paper feed holder ASSY and T2 paper feed drive shaft from the T2 paper feed frame unit.

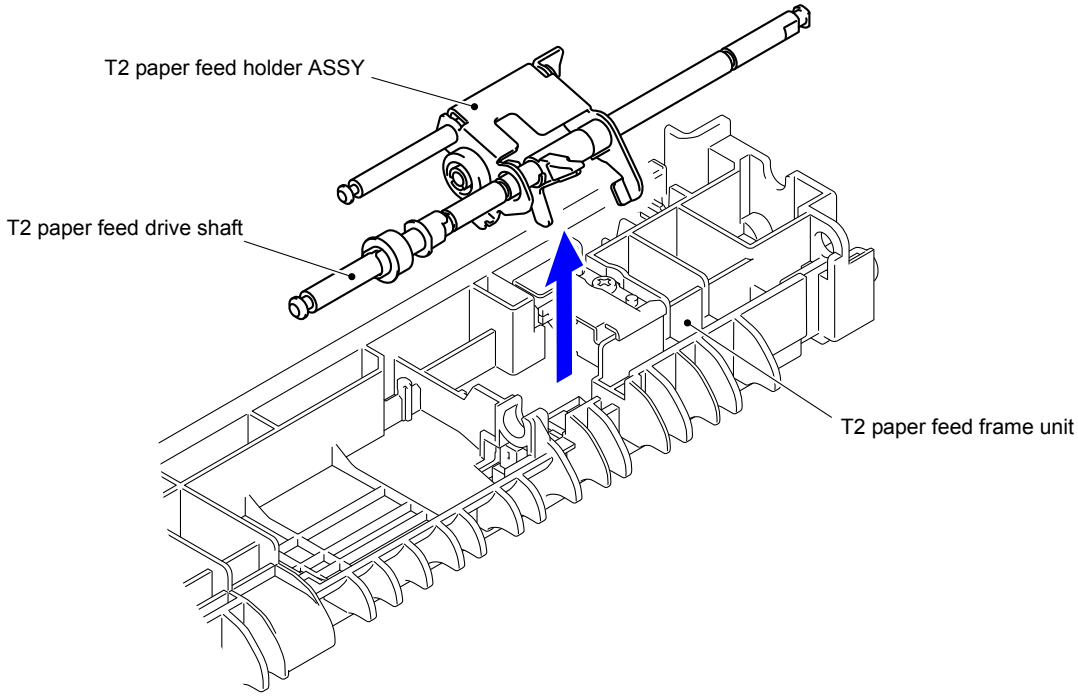

Fig. 3-189

(31) Pull out the T2 paper feed drive shaft from the T2 paper feed holder ASSY and T2 edge actuator.

(32) Remove the T2 edge actuator from the T2 paper feed holder ASSY.

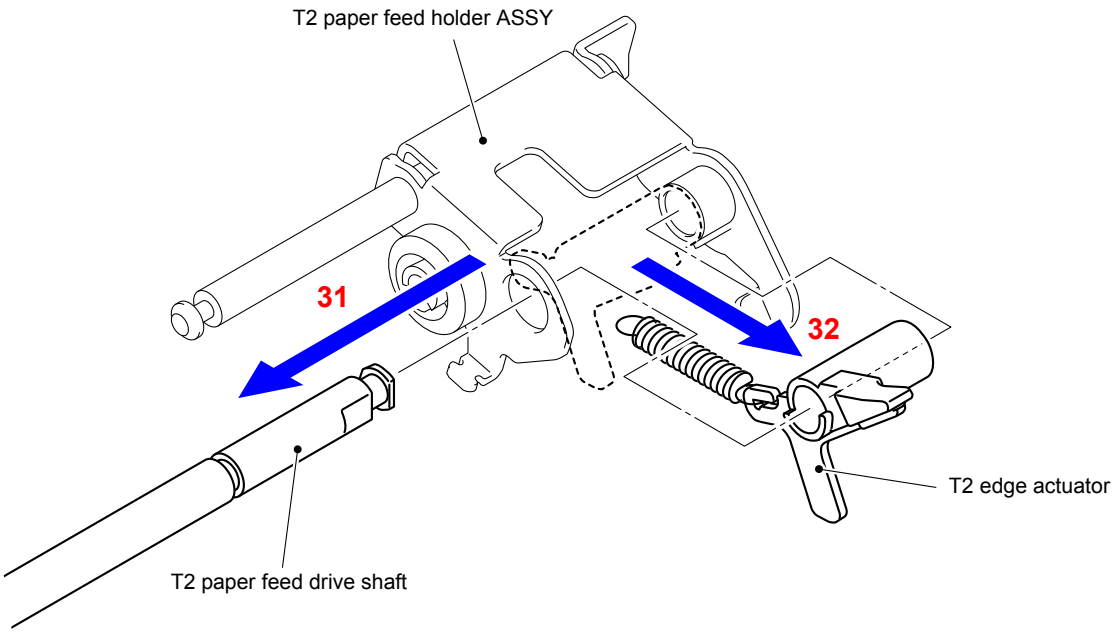

Fig. 3-190

(33) Remove the T2 edge actuator spring from the Hook of the T2 edge actuator.

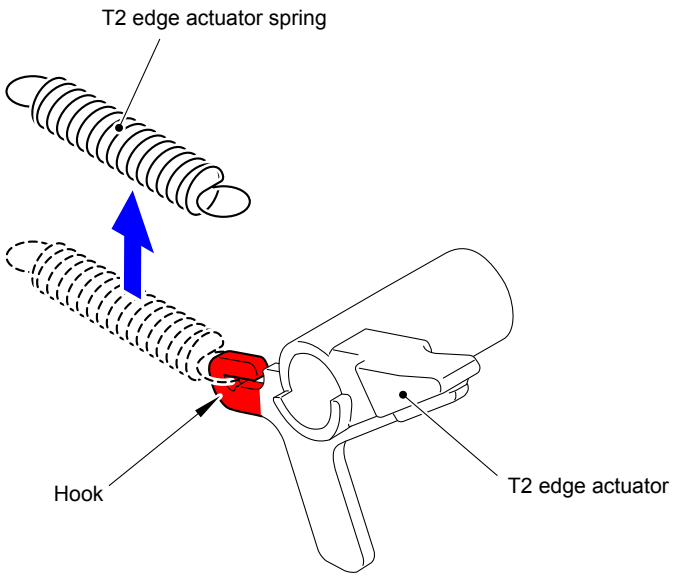

Fig. 3-191

CHAPTER 4 ADJUSTMENTS AND UPDATING OF SETTINGS, REQUIRED AFTER PARTS REPLACEMENT

1. IF YOU REPLACE THE MAIN PCB ASSY

■ What to do after replacement

- Installing the Firmware (Sub firmware, Panel firmware, Main Firmware, and High-voltage firmware)
- Initializing the EEPROM of the Main PCB ASSY (Function code 01)
- Restore Machine Information (Function code 41)
- Setting by Country (Function code 74)
- Setting the Serial Number (Function code 80)
- Motor Reset (Function code 57)
- Continuous Adjustments of Density and Registration Sensor (Function code 73)
- Adjustment of Touch Panel (Function code 61)

■ What you need to prepare

(1) USB flash memory

(2) A USB cable

(3) Create a temporary folder on the C drive of the computer (Windows® XP or higher).

(4) Service setting tool (BrUsbSn.zip)
Copy it into the temporary folder that has been created in the C drive. Extract the copied file and execute “BrUsbsn.exe” file by double-clicking it.

(5) Download utility (Filedg32.exe)
Copy it into the temporary folder that has been created in the C drive.

(6) Maintenance printer driver (Maintenance_driver.zip)
When the maintenance printer driver is not installed, copy this file into the temporary folder created on the C drive, and extract the copied file. Refer to “APPENDIX 3 INSTALLING THE MAINTENANCE PRINTER DRIVER” to install the driver.

(7) Firmware

Sub firmware	LZXXXX_$.djf
Panel firmware (Model with touch panel only)	LZXXXX_$.djf
Main firmware	LZXXXX_$.djf
High-voltage firmware	LZXXXX_$.djf
LZXXXX: First six digits of the part number of the firmware $: Alphabet representing the revision of the firmware.	

(8) Touch pen

1.1 Installing the Firmware (Sub Firmware, Panel Firmware, Main Firmware, and High-voltage Firmware)

1.1.1 Checking firmware version

Check whether the firmware installed in the machine is the latest version. If the version is the latest, updating the firmware is unnecessary. If the version is not the latest, install the latest firmware into the machine following the instructions provided in “1.1.2 Installing the firmware” in this chapter.

<How to check firmware version>

Model without touch panel

(1) Press the **OK** key and then the **Go** key while the machine is in the ready state. Next, press the ▲ key four times to enter the maintenance mode.

(2) Press the ▲ or ▼ key to display “MAINTENANCE 25” and then press the **OK** key. Then, the Main firmware version information is displayed on the LCD.

(3) Next, press the **Go** key to display the version information of the Sub firmware and High-voltage firmware on the LCD and check the information.

Model with touch panel

(1) Hold down the **Home** key for about 5 seconds while the machine is in the ready state.

(2) Hold down the blank space at the bottom of the LCD for about 2 seconds.

(3) Press the *****, **2**, **8**, **6**, and **4** keys on the LCD in this order to enter the maintenance mode.

(4) Press the **2** and **5** keys in this order. Then, the Main firmware version information is displayed on the LCD.

(5) Next, press the **Mono** key to display the version information of the Sub firmware, Panel firmware, and High-voltage firmware on the LCD and check the information.

Memo:

You can check the firmware version of the Sub firmware, Panel firmware, Main firmware, and High-voltage firmware by printing the maintenance information.
(Refer to “1.3.24 Printout of maintenance information (Function code 77)” in Chapter 5.)

1.1.2 Installing the firmware

■ Installing the firmware using USB flash memory

Memo:

- Installing the firmware using a USB flash memory is not possible in deep sleep mode. Open and close the front cover, etc. to quit the deep sleep mode before installing the firmware.
- Install the Sub firmware, Panel firmware, Main firmware, and High-voltage firmware in this order. (The Panel firmware is available only for the models with a touch panel.)
- Never disconnect the AC cord of the machine or computer, or the USB flash memory during installing.
- If installing the firmware using a USB flash memory fails and an error message is displayed on the LCD or no characters are displayed on the LCD, install the firmware using a computer referring to "■ Installing the firmware using computer" in this chapter.

<Operating procedure>

Model without touch panel

(1) Save the program files (such as LZXXXX_$.djf) which are necessary for installing the firmware to the USB flash memory.

(2) While the machine is in the ready state, connect the USB flash memory drive to the USB direct interface on the front of the machine.

(3) When the machine detects the USB flash memory, the program names are displayed on the LCD. Press the ▲ or ▼ key to select the program name that you want to install.

(4) Press the **Go** key to start installing.

(5) When installation is completed, the machine automatically restarts.

(6) Repeat steps (3) to (4) to install necessary firmware.

(7) When all firmware installation has been completed, remove the USB flash memory from the USB direct interface.

Model with touch panel

(1) Save the program files (such as LZXXXX_$.djf) which are necessary for installing the firmware to the USB flash memory.

(2) While the machine is in the ready state, connect the USB flash memory drive to the USB direct interface on the front of the machine.

(3) When the machine detects the USB flash memory, the program names are displayed on the LCD. Press the ∧ or ∨ key to display the program name that you want to install.

(4) Press the program name that you want to install on the LCD to start installing.

(5) When installation is completed, the machine automatically restarts.

(6) Repeat steps (3) to (4) to install necessary firmware.

(7) When all firmware installation has been completed, remove the USB flash memory from the USB direct interface.

■ Installing the firmware using computer

Memo:

- Install the Sub firmware, Panel firmware, Main firmware, and High-voltage firmware in this order. (The Panel firmware is available only for the models with a touch panel.)
- Never disconnect the AC cord of the machine or computer, or the USB cable during installing.
- If you failed to install the firmware, turn OFF the power of the machine and turn it ON again. The machine automatically enters the firmware installing mode. Perform the following installing procedures again.

<Operating procedure>

Common to models without a touch panel/models with a touch panel

(1) If the computer and machine are connected with an USB cable, disconnect the USB cable and enter the maintenance mode. (Refer to “1.1 How to Enter the Maintenance Mode” in Chapter 5.)

(2) Connect the computer to the machine with the USB cable.

(3) Open the temporary folder, double-click the “Filedg32.exe” to start, and select “Brother Maintenance USB Printer”.

(4) Drag and drop a necessary program file (for instance, LZXXXX_$.djf) located in the same folder to the Brother Maintenance USB Printer icon located within the FILEDG32 screen. The files are sent to the machine and installation into the flash ROM is started.

(5) When installation is completed, the machine reboots and returns to the ready state.

(6) Turn OFF the power of the machine, and repeat steps (1) to (5) to install necessary firmware.

(7) Turn OFF the power of the machine, and disconnect the USB cable.

1.2 Initializing the EEPROM of the Main PCB ASSY (Function code 01)

Initialize the EEPROM of the main PCB ASSY in accordance with “1.3.1 EEPROM parameter initialization (Function code 01, 91)” in Chapter 5.

1.3 Restore Machine Information (Function code 41)

Restore the machine information and user setting information that have been backed up in an external memory in accordance with “1.3.11 Backup of machine information (Function code 41)” in Chapter 5.

Memo:

If the data is successfully restored, the operations described in sections 1.4, 1.6, and 1.7 in this chapter are not necessary.

1.4 Setting by Country (Function code 74)

Make appropriate settings by country in accordance with “1.3.23 Setting by country (Function code 74)” in Chapter 5.

1.5 Setting the Serial Number (Function code 80)

Referring to "1.3.26 Display of device log information (Function code 80)" in Chapter 5, set the serial number. The serial number can be also set using the service setting tool (BrUsbsn.exe). The procedures are described below.

<Operating procedure>

Common to models without a touch panel/models with a touch panel

(1) Enter the maintenance mode. (Refer to "1.1 How to Enter the Maintenance Mode" in Chapter 5.)

(2) Connect the computer to the machine with the USB cable.

(3) Double-click the "BrUsbsn.exe" file copied into the temporary folder to start the file. The BrUsbSn screen appears as shown on the right.

(4) Select "3 Color-Laser" in [Product Category] field.

(5) Select "2014_Printer".

(6) In [Port] field on the BrUsbSn screen, select the port assigned to Brother Maintenance USB Printer.

(7) Enter the serial number (15 digits) of the machine into the box on the [Serial No] field.

(8) Click the **OK** button. The serial number is written in the machine.

(9) Turn OFF the power of the machine, and disconnect the USB cable from the computer and the machine.

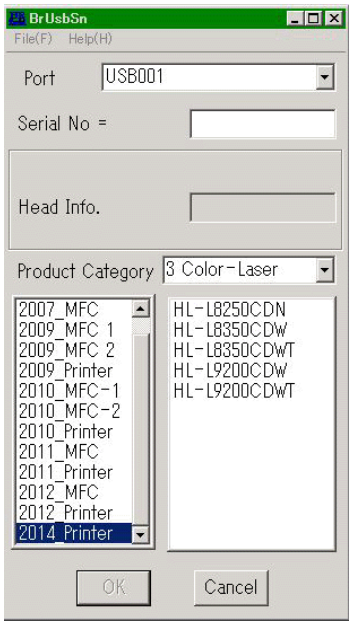

Memo:

Refer to "APPENDIX 1 SERIAL NUMBERING SYSTEM" to know how to read the serial number label of the machine.

1.6 Motor Reset (Function code 57)

Perform motor reset in accordance with "1.3.13 Motor reset (Function code 57)" in Chapter 5.

1.7 Continuous Adjustments of Density and Registration Sensor (Function code 73)

Perform continuous adjustments of density and registration sensor in accordance with "1.3.22 Continuous adjustments of density and registration sensor (Function code 73)" in Chapter 5.

1.8 Adjustment of Touch Panel (Function code 61)

Perform adjustment of touch panel in accordance with "1.3.14 Adjustment of touch panel (Function code 61) (Model with touch panel only)" in Chapter 5.

2. IF YOU REPLACE THE REGISTRATION MARK SENSOR UNIT

■ **What to do after replacement**

- Continuous Adjustments of Density and Registration Sensor (Function code 73)

2.1 Continuous Adjustments of Density and Registration Sensor (Function code 73)

Perform continuous adjustments of density and registration sensor in accordance with “1.3.22 Continuous adjustments of density and registration sensor (Function code 73)” in Chapter 5.

3. IF YOU REPLACE THE LOW-VOLTAGE POWER SUPPLY PCB UNIT

■ **What to do after replacement**

- Reset of Irregular Power Supply Detection Counter of Low-Voltage Power Supply PCB (Reset Counters for Parts (Function code 88))

3.1 Reset of Irregular Power Supply Detection Counter of Low-Voltage Power Supply PCB (Reset Counters for Parts (Function code 88))

Perform resetting irregular power supply detection counter of the low-voltage power supply PCB in accordance with “1.3.29 Reset counters for parts (Function code 88)” in Chapter 5.

4. IF YOU REPLACE THE PROCESS DRIVE UNIT

■ **What to do after replacement**

- Motor Reset (Function code 57)

4.1 Motor Reset (Function code 57)

Perform motor reset in accordance with “1.3.13 Motor reset (Function code 57)” in Chapter 5.

5. IF YOU REPLACE THE HIGH-VOLTAGE POWER SUPPLY PCB ASSY

■ What to do after replacement

- Installing the Firmware (Sub firmware, Panel firmware, Main Firmware, and High-voltage firmware)
- Continuous Adjustments of Density and Registration Sensor (Function code 73)

■ What you need to prepare

(1) USB flash memory

(2) A USB cable

(3) Create a temporary folder on the C drive of the computer (Windows® XP or higher).

(4) Service setting tool (BrUsbSn.zip)
Copy it into the temporary folder that has been created in the C drive. Extract the copied file and execute “BrUsbsn.exe” file by double-clicking it.

(5) Download utility (Filedg32.exe)
Copy it into the temporary folder that has been created in the C drive.

(6) Maintenance printer driver (Maintenance_driver.zip)
When the maintenance printer driver is not installed, copy this file into the temporary folder created on the C drive, and extract the copied file. Refer to “APPENDIX 3 INSTALLING THE MAINTENANCE PRINTER DRIVER” to install the driver.

(7) Firmware

Sub firmware	LZXXXX_$.djf
Panel firmware (Model with touch panel only)	LZXXXX_$.djf
Main firmware	LZXXXX_$.djf
High-voltage firmware	LZXXXX_$.djf
LZXXXX: First six digits of the part number of the firmware $: Alphabet representing the revision of the firmware.	

5.1 Installing the Firmware (Sub Firmware, Panel Firmware, Main Firmware, and High-voltage Firmware)

5.1.1 Checking firmware version

Check whether the firmware installed on the machine is the latest version in accordance with “1.1.1 Checking firmware version” in this chapter. If the version is the latest, installing the firmware is unnecessary. If the version is not the latest, install all the firmwares.

5.1.2 Installing the firmware

When each installed firmware is not the latest version, install the firmwares in accordance with “1.1.2 Installing the firmware” in this chapter.

5.2 Continuous Adjustments of Density and Registration Sensor (Function code 73)

Perform continuous adjustments of density and registration sensor in accordance with “1.3.22 Continuous adjustments of density and registration sensor (Function code 73)” in Chapter 5.

6. IF YOU REPLACE THE TOP COVER ASSY, LCD PANEL ASSY OR PANEL CONTROL PCB ASSY (MODEL WITH TOUCH PANEL ONLY)

■ **What to do after replacement**

- Installing the Firmware
- Adjustment of Touch Panel (Function code 61)
- Operational Check of LCD (Function code 12)

■ **What you need to prepare**

(1) USB flash memory

(2) A USB cable

(3) Create a temporary folder on the C drive of the computer (Windows® XP or higher).

(4) Download utility (Filedg32.exe)
Copy it into the temporary folder that has been created in the C drive.

(5) Maintenance printer driver (Maintenance_driver.zip)
When the maintenance printer driver is not installed, copy this file into the temporary folder created on the C drive, and extract the copied file. Refer to "APPENDIX 3 INSTALLING THE MAINTENANCE PRINTER DRIVER" to install the driver.

(6) Firmware

Sub firmware	LZXXXX_$.djf
Panel firmware (Model with touch panel only)	LZXXXX_$.djf
Main firmware	LZXXXX_$.djf
High-voltage firmware	LZXXXX_$.djf
LZXXXX: First six digits of the part number of the firmware $: Alphabet representing the revision of the firmware.	

(7) Touch pen

6.1 Installing the Firmware

6.1.1 Checking firmware version

Check whether the firmware installed on the machine is the latest version in accordance with "1.1.1 Checking firmware version" in this chapter. If the version is the latest, installing the firmware is unnecessary. If the version is not the latest, install all the firmwares.

6.1.2 Installing the firmware

When each installed firmware is not the latest version, install the firmwares in accordance with "1.1.2 Installing the firmware" in this chapter.

6.2 Adjustment of Touch Panel (Function code 61)

Perform adjustment of touch panel in accordance with “1.3.14 Adjustment of touch panel (Function code 61) (Model with touch panel only)” in Chapter 5.

6.3 Operational Check of LCD (Function code 12)

Perform operation check of the LCD in accordance with “1.3.4 Operational check of LCD (Function code 12)” in Chapter 5.

7. IF YOU REPLACE THE TOP COVER ASSY, PANEL COVER ASSY, PANEL PCB ASSY, LCD (MODEL WITHOUT TOUCH PANEL ONLY)

■ **What to do after replacement**

- Operational Check of LCD (Function code 12)
- Operational Check of Control Panel Key (Function code 13)

7.1 Operational Check of LCD (Function code 12)

Perform operation check of the LCD in accordance with “1.3.4 Operational check of LCD (Function code 12)” in Chapter 5.

7.2 Operational Check of Control Panel Key (Function code 13)

Perform operation check of the control panel key in accordance with “1.3.5 Operational check of control panel key (Function code 13)” in Chapter 5.

8. IF YOU REPLACE THE LASER UNIT

■ **What to do after replacement**

- Continuous Adjustments of Density and Registration Sensor (Function code 73)
- Counter Reset of Laser Unit (Reset Counters for Parts (Function code 88))

8.1 Continuous Adjustments of Density and Registration Sensor (Function code 73)

Perform continuous adjustments of density and registration sensor in accordance with “1.3.22 Continuous adjustments of density and registration sensor (Function code 73)” in Chapter 5.

8.2 Counter Reset of Laser Unit (Reset Counters for Parts (Function code 88))

Perform counter reset of the laser unit in accordance with “1.3.29 Reset counters for parts (Function code 88)” in Chapter 5.

9. IF YOU REPLACE THE FUSER UNIT/ PF KIT 1, 2, AND MP

■ **What to do after replacement**

- Counter Reset of Fuser Unit or PF Kit 1, 2, and MP
  (Reset Counters for Parts (Function code 88))

9.1 Counter Reset of Fuser Unit or PF Kit 1, 2, and MP (Reset Counters for Parts (Function code 88))

Perform counter reset of the fuser unit or PF kit 1, 2, and MP in accordance with “1.3.29 Reset counters for parts (Function code 88)” in Chapter 5.

CHAPTER 5 SERVICE FUNCTIONS

1. MAINTENANCE MODE

The maintenance mode is exclusively designed for the checking, setting and adjustments of the machine by using the keys on the control panel. You can check the operations of sensors, perform a print test, display the log information or error codes, and modify the worker switch (WSW).

1.1 How to Enter the Maintenance Mode

1.1.1 How to Enter the Maintenance Mode Exclusive to Service Personnel

<Operating procedure>

Model without touch panel

(1) Press the **OK** key and then the **Go** key while the machine is in the ready state. Next, press the ▲ key four times to enter the maintenance mode.

> **Note:**
> To enter the maintenance mode, you must press the **Go** key within 2 seconds after pressing the **OK** key. Also, you need to press the ▲ key within 2 seconds after pressing the **Go** key.

(2) The machine displays "▮▮ MAINTENANCE ▮▮▮" on the LCD, indicating that it is placed in the initial state of the maintenance mode. In this mode, the machine is ready to accept entry from the keys.

(3) To select one of the maintenance-mode functions listed in "1.2 List of Maintenance-mode Functions", press the ▲ or ▼ key to display any function code on the LCD. Then press the **OK** key.

Model with touch panel

(1) Hold down the **Home** key for about 5 seconds while the machine is in the ready state. The screen shown on the right is displayed on the LCD.

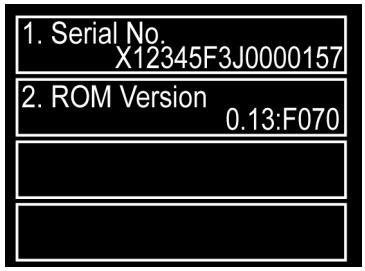

(2) Hold down the blank space at the bottom of the LCD for about 2 seconds. The screen shown on the right is displayed on the LCD.

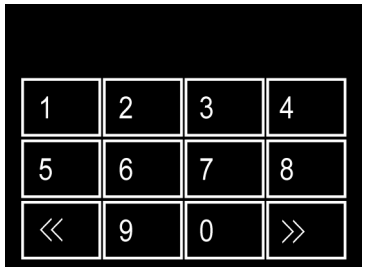

(3) Press the *, **2**, **8**, **6**, and **4** keys on the LCD in this order. The screen shown on the right is displayed on the LCD and the machine enters the maintenance mode.

(4) To select one of the maintenance mode functions shown in "1.2 List of Maintenance-mode Functions", directly enter the function code that you want to use with the ten-key pad.

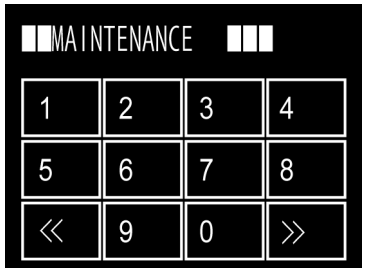

1.1.2 How to Enter the End User-accessible Maintenance Mode

Basically, the maintenance-mode functions listed in the next page should be accessed by service personnel only. However, you can allow end users to access some of these under the guidance of service personnel by phone, for example. The end user-accessible functions are shaded in the table given on "1.2 List of Maintenance-mode Functions". (codes 09, 12, 25, 28, 41, 45, 61, 66, 68, 71, 72, 77, 80, 82 and 91)

<Operating procedure>

Model without touch panel

(1) Press the **OK**, **Go** and **OK** keys in this order when the machine is in the ready state. "0" is displayed on the LCD.

(2) Press the ▲ or ▼ key to display the desired maintenance code on the LCD. Then press the **OK** key.

(3) When each of the maintenance mode functions is completed, the machine automatically returns to the ready state. As for the codes 12, 25, 28, 45, 66, 68, 71, 72, 80 and 82, press the **Cancel** key to switch the machine return to the ready state.

Model with touch panel

(1) Hold down the **Home** key for about 5 seconds while the machine is in the ready state. The screen shown on the right is displayed on the LCD.

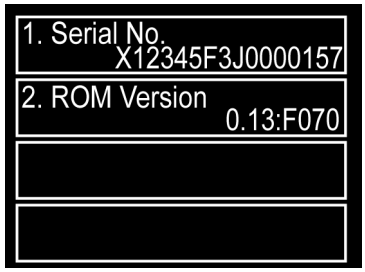

(2) Hold down the blank space at the bottom of the LCD for about 2 seconds. The screen shown on the right is displayed on the LCD.

(3) Press the *, **0**, and **#** keys on the LCD in this order. The machine gets ready for the input of a function code. Enter the function code you want to use.

(4) When each of the maintenance mode functions is completed, the machine automatically returns to the ready state.

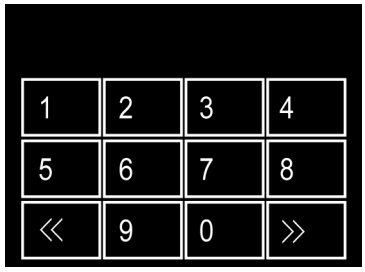

1.2 List of Maintenance-mode Functions

Function code	Function	Refer to:
01	EEPROM parameter initialization	1.3.1 (5-4)
09	Monochrome image quality test pattern	1.3.2 (5-5)
10	Worker switch (WSW) setting	1.3.3 (5-6)
11	Printout of worker switch (WSW) data	1.3.3 (5-6)
12	Operational check of LCD	1.3.4 (5-8)
13	Operational check of control panel key	1.3.5 (5-10)
25	Software version check	1.3.6 (5-11)
28	“One Push Demo” setting	1.3.7 (5-12)
32	Operational check of sensors	1.3.8 (5-13)
33	LAN connection status display	1.3.9 (5-16)
40	EEPROM Dump Print	1.3.10 (5-17)
41	Backup of machine information	1.3.11 (5-18)
45	Changing return value of USB No./Switching Dither Pattern/ Switching of ON/OFF of DirectPrint Color mode-Improve Gray Color/Switching of timing to execute Auto Registration/ Adjusting left-end print start position on second side in duplex printing/Change of the transfer current setting/ Change of ghost reduction setting	1.3.12 (5-21)
57	Motor reset	1.3.13 (5-28)
61	Adjustment of touch panel	1.3.14 (5-29)
66	Adjustment of color registration (Adjustment of inter-color position alignment)	1.3.15 (5-30)
67	Continuous print test	1.3.16 (5-34)
68	Laser unit test pattern print	1.3.17 (5-38)
69	Frame pattern print (One-sided)	1.3.18 (5-39)
70	Frame pattern print (Two-sided)	1.3.19 (5-40)
71	Color test pattern	1.3.20 (5-41)
72	Sensitivity adjustment of density sensor	1.3.21 (5-44)
73	Continuous adjustments of density and registration sensor	1.3.22 (5-45)
74	Setting by country	1.3.23 (5-46)
77	Printout of maintenance information	1.3.24 (5-48)
78	Operational check of fans	1.3.25 (5-50)
80	Display of device log information	1.3.26 (5-51)
82	Display of device error codes	1.3.27 (5-55)
83	Developing bias voltage correction	1.3.28 (5-56)
88	Reset counters for parts	1.3.29 (5-57)
91	EEPROM parameter initialization	1.3.1 (5-4)
99	Exit from the maintenance mode	1.3.30 (5-57)

* The functions shaded in the table above are user-accessible.

Confidential

1.3 Detailed Description of Maintenance-mode Functions

1.3.1 EEPROM parameter initialization (Function code 01, 91)

<Function>

This function is used to initialize the setting values for operation parameters, user switches, and worker switches (WSW) registered in the EEPROM. Entering function code 01 initializes most EEPROM areas. Entering function code 91 initializes only the specified areas as shown in the table below.

Data item	Function code 01	Function code 91
Printer switch (Counter information)	These will not be initialized.	These will not be initialized.
Error History		
MAC address (Ethernet Address)		
Operation lock of the control panel password	These will be initialized.	
Secure Function Lock		
Worker switch		
User switches (Items to be initialized when resetting to the factory default settings)		These will be initialized.
Function setting except user switches (Items except the factory default settings) - Languages - Interfaces		
LAN settings		
PCL core area (Emulation settings)		

<Operating procedure>

Model without touch panel

(1) Press the ▲ or ▼ key to display "MAINTENANCE 01" (or "MAINTENANCE 91" according to your need) on the LCD in the initial state of the maintenance mode. Then, press the **OK** key.
The "PARAMETER INIT" is displayed on the LCD.

(2) Upon completion of parameter initialization, the machine returns to the initial state of the maintenance mode.

Model with touch panel

(1) Press the **0** and **1** keys (or the **9** and **1** keys according to your need) in this order in the initial state of the maintenance mode. The "PARAMETER INIT" is displayed on the LCD.

(2) Upon completion of parameter initialization, the machine returns to the initial state of the maintenance mode.

Note:
Function code 01 is for service personnel. Function code 91 is for user support.

1.3.2 Monochrome image quality test pattern (Function code 09)

<Function>

This function is used to print various monochrome test patterns and check the quality and if there is any image loss.

<Operating procedure>

Model without touch panel

(1) Press the ▲ or ▼ key to display "MAINTENANCE 09" on the LCD in the initial state of the maintenance mode. Then, press the **OK** key. Printing of a monochrome image quality test pattern (see the figure below) is started.

(2) When printing is finished, the machine returns to the initial state of the maintenance mode.

Model with touch panel

(1) Press the **0** and **9** keys in this order in the initial state of the maintenance mode. "MAINTENANCE 09" is displayed on the LCD. Printing of a monochrome image quality test pattern (see the figure below) is started.

(2) When printing is finished, the machine returns to the initial state of the maintenance mode.

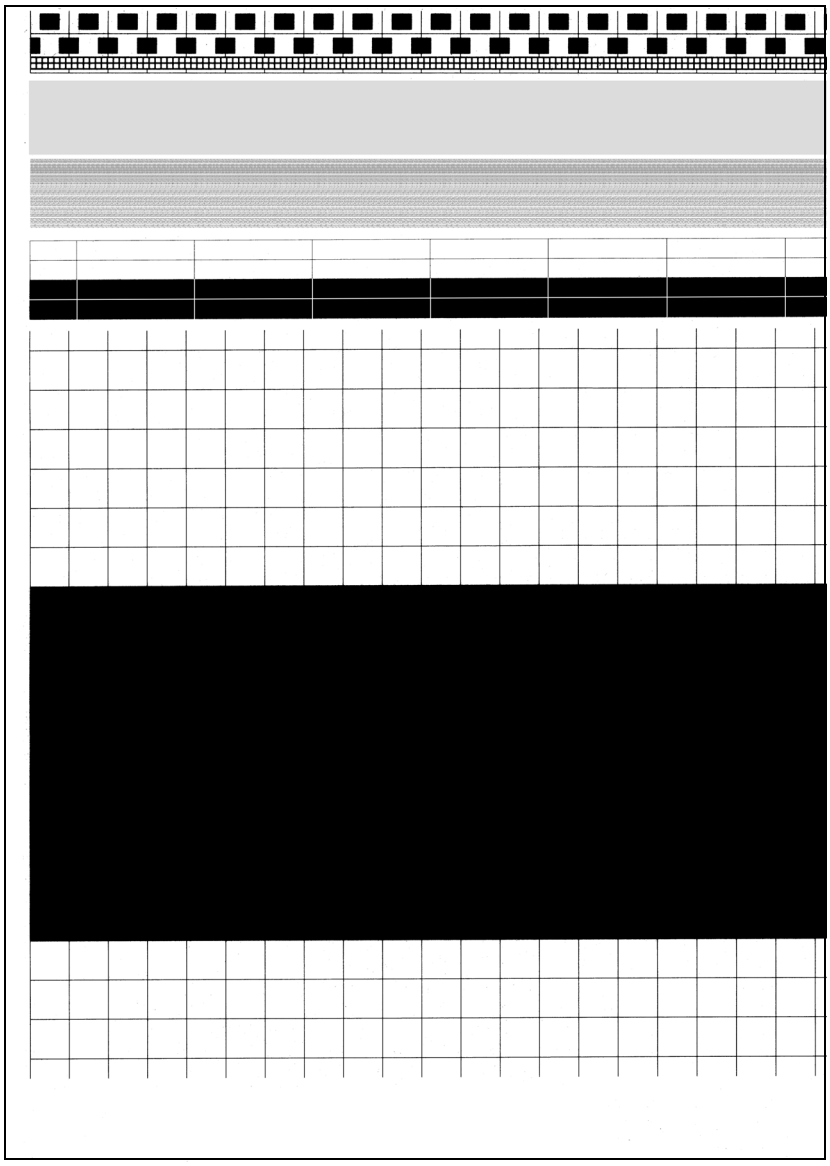

Fig. 5-1

Confidential

1.3.3 Worker switch (WSW) setting and printout (Function code 10, 11)

[1] Worker switch (WSW) setting (Function code 10)

<Function>

The worker switches shown in the table below can be used to set the function to satisfy various requirements. The switch setting can be changed using the keys on the control panel. The worker switches are factory set to conform with the laws and regulations of the country the machine is shipped to. Do not change these settings unless necessary.

WSW No.	Function
WSW17 Selector 5	Switching of the time display method (between the American method (MM/DD/YY**) and European method (DD/MM/YY**))
WSW47 Selector 8	Switching between high-speed USB and full-speed USB
WSW56 Selector 1	Enabling and disabling setting of PS Emulation
WSW56 Selector 6	Switching of the display for the coverage of toner cartridge
WSW56 Selector 7	Enabling and disabling switching of PCL Emulation
WSW56 Selector 8	Switching of the CPU sleep mode
WSW59 Selector 1	Enabling and disabling of transmission of USB serial number (SN)
WSW63 Selector 1-2	Switch of the print speed
WSW63 Selector 3	Switching of the time display method (between the Japanese method (YY/MM/DD**) and other methods)
WSW63 Selector 4-7	Demo print type
WSW63 Selector 8	Font support for Israel
WSW64 Selector 1-6	Language setting
WSW64 Selector 7-8	Default paper size
WSW65 Selector 1-2	Default media type
WSW65 Selector 3	Support for Bond paper
WSW65 Selector 4	Support for Hagaki
WSW65 Selector 6	Support for Label
WSW78 Selector 1	Recording stop function when the drum reaches the end of life

<Operating procedure>

Model without touch panel

(1) Press the ▲ or ▼ key to display "MAINTENANCE 10" on the LCD in the initial state of the maintenance mode.

(2) Press the **OK** key. The machine displays "WSW00" on the LCD and becomes ready to accept a worker switch number.

(3) Press the ▼ or ▲ key to display the worker switch number whose setting you want to change on the LCD.

Model with touch panel

(1) Press the **1** and **0** keys in this order in the initial state of the maintenance mode. "WSW00" is displayed on the LCD.

(2) Enter the number of worker switch to change.
The following is displayed on the LCD.

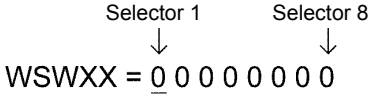

Confidential

(4) Press the **OK** key. The following is displayed on the LCD.

Selector 1 Selector 8
↓ ↓
WSWXX = 0 0 0 0 0 0 0 0

(5) Pressing the ▲ key to enter "1" and the ▼ key to enter "0". Press the key of the value you want to enter at selector No.1. The underline cursor moves to the next digit.

(6) Enter each value at selectors No.2 to No.8 in the way described in step (5) using the ▲ and ▼ keys.

(7) Press the **OK** key. This operation saves the newly entered selector values onto the EEPROM and readies the machine for accepting a worker switch number (WSW00).

(8) When worker switch setting is completed, press the **Cancel** key to return the machine to the initial state of the maintenance mode.

(3) Move the cursor to the selector you want to change with the < or > key, and change the value by pressing the **1** or **0** key.

(4) When you finish changing the value, press the **SET** key. This operation saves the newly entered selector values onto the EEPROM and readies the machine for accepting a worker switch number (WSW00).

(5) When worker switch setting is completed, press the **X** key to return the machine to the initial state of the maintenance mode.

[2] Printout of worker switch (WSW) data (Function code 11)

<Function>

This function is used to print out the setting items and the details set by the worker switches.

<Operating procedure>

Model without touch panel

(1) Press the ▲ or ▼ key to display "MAINTENANCE 11" on the LCD in the initial state of the maintenance mode. Then, press the **OK** key.

(2) "PRINTING" is displayed on the LCD and the CONFIGURATION LIST (see the figure below) is printed.

(3) When printing is finished, the machine returns to the initial state of the maintenance mode.

Model with touch panel

(1) Press the **1** key twice in the initial state of the maintenance mode.

(2) "PRINTING" is displayed on the LCD and the CONFIGURATION LIST (see the figure below) is printed.

(3) When printing is finished, the machine returns to the initial state of the maintenance mode.

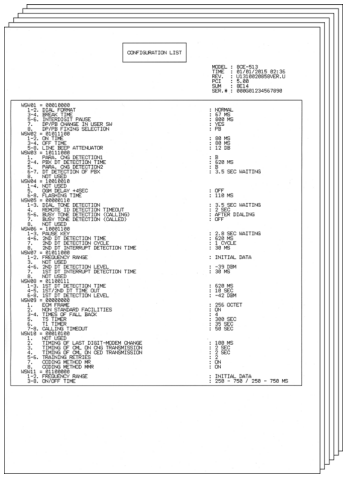

Fig. 5-2

Confidential

1.3.4 Operational check of LCD (Function code 12)

<Function>

This function is used to check that the LCD on the control panel is operating normally.

<Operating procedure>

Model without touch panel

(1) Press the ▲ or ▼ key to display “MAINTENANCE 12” on the LCD in the initial state of the maintenance mode. Then, press the **OK** key.

(2) Each time you press the **Go** key, the LCD cycles through the displays as shown below.

(3) When the **Cancel** key is pressed, the machine returns to the initial state of the maintenance mode, regardless of the display status.

<Display 1>	
Backlight	: OFF
LCD	: Display of all dots
Data LED	: Green ON
Error LED	: Orange ON
<Display 2>	
Backlight	: OFF
LCD	: Display of 16 dots in 2 lines
Data LED	: Green ON
Error LED	: Orange ON
<Display 3>	
Backlight	: OFF
LCD	: Display of no dots
Data LED	: Green ON
Error LED	: Orange ON
<Display 4>	
Backlight	: ON
LCD	: Display of no dots
Data LED	: Green ON
Error LED	: Orange ON

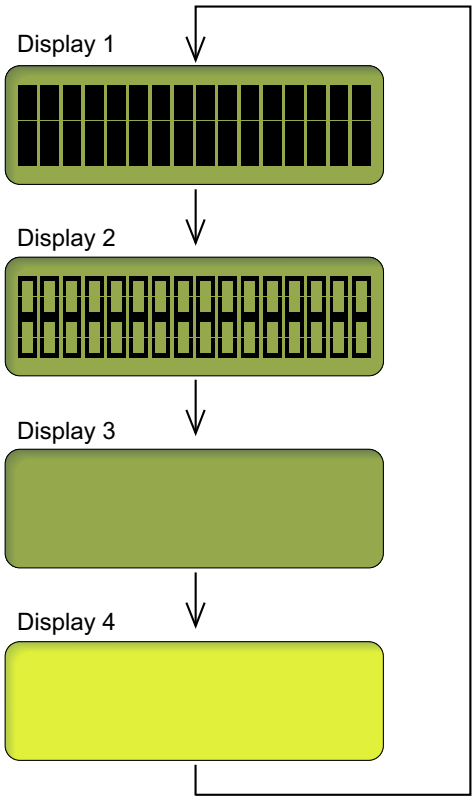

Fig. 5-3

Confidential

Model with touch panel

<Operating procedure>

(1) Press the **1** and **2** keys in this order in the initial state of the maintenance mode.
A completely blank screen is displayed on the LCD.

(2) Each time you press the ▲ key, the LCD cycles through the displays as shown below.

(3) When the **X** key is pressed, the machine returns to the initial state of the maintenance mode, regardless of the display status.

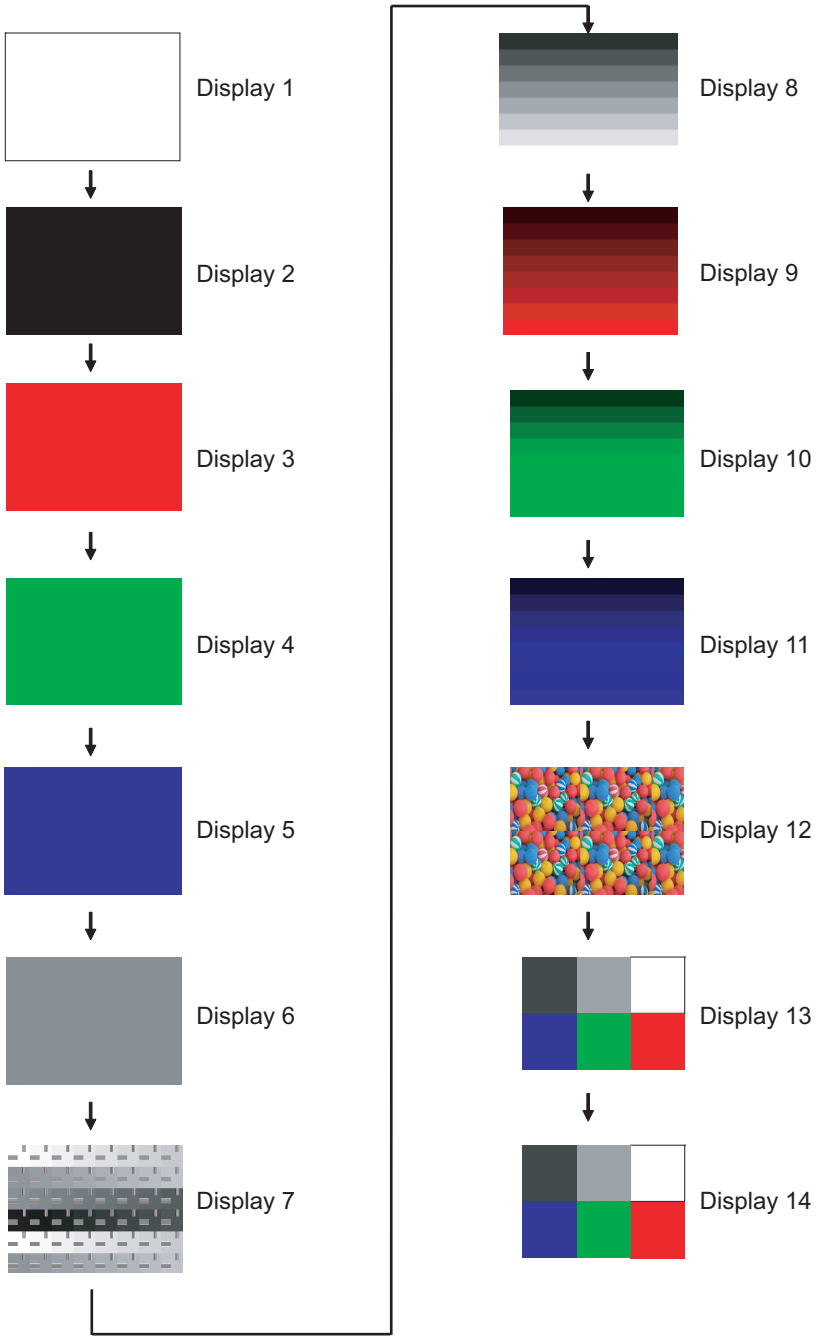

Fig. 5-4

Confidential

1.3.5 Operational check of control panel key (Function code 13)

<Function>

This function is used to check that the keys on the control panel operate normally.

<Operating procedure>

Model without touch panel

(1) Press the ▲ or ▼ key to display "MAINTENANCE 13" on the LCD in the initial state of the maintenance mode. Then, press the **OK** key. "00:" is displayed on the LCD.

(2) Press the keys in the order designated in the figure shown below.
The LCD shows the corresponding number in decimal notation each time a key is pressed.
Check that the displayed number is correct by referring to the figure below.
If the keys are pressed in the incorrect order, the machine displays the "INVALID OPERATE" on the LCD.
Press the **Cancel** key, and then press the correct keys.

(3) After the last number key is pressed, the machine returns to the initial state of the maintenance mode. To cancel this operation and return the machine to the initial state of the maintenance mode during the above procedure, press the **Cancel** key.

Model with touch panel

(1) Press the **1** and **3** keys in this order in the initial state of the maintenance mode. "00" is displayed on the LCD.

(2) Press the keys in the order designated in the figure shown below.
The LCD shows the corresponding number in decimal notation each time a key is pressed.
Check that the displayed number is correct by referring to the figure below.
If the keys are pressed in the incorrect order, the machine displays the "INVALID OPERATE" on the LCD.
Press the **X** key, and then press the correct keys.

(3) After the last number key is pressed, the machine returns to the initial state of the maintenance mode. To cancel this operation and return the machine to the initial state of the maintenance mode during the above procedure, press the **X** key.

■ Order to press keys

- HL-L8250CDN/L8350CDW

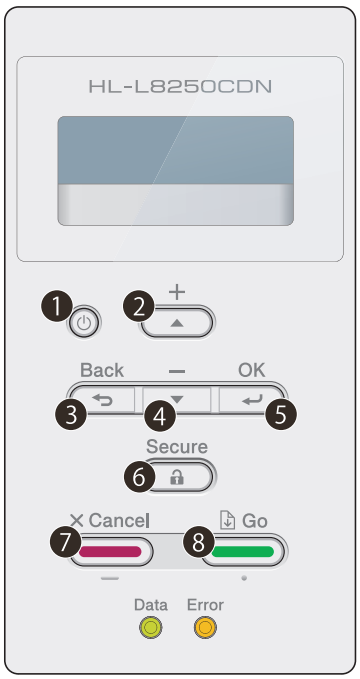

- HL-L9200CDW

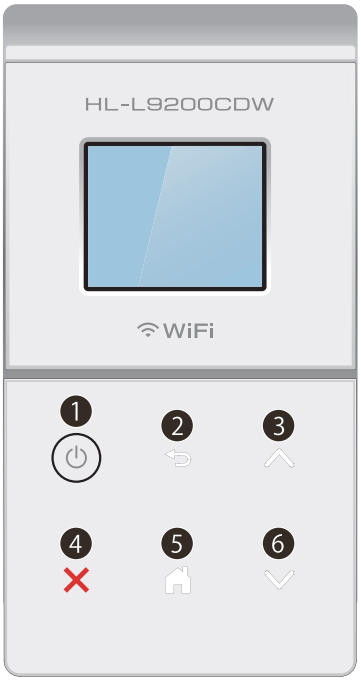

Fig. 5-5

Confidential

1.3.6 Software version check (Function code 25)

<Function>

This function is used to check the version information of the firmware or programs, or check sum information.

<Operating procedure>

Model without touch panel

(1) Press the ▲ or ▼ key to display "MAINTENANCE 25" on the LCD in the initial state of the maintenance mode. Then, press the **OK** key. "TOTAL:Ver*" is displayed on the LCD.

(2) When you press the **Go**, ▲ or ▼ key, the display on the LCD changes as shown in the list below.

(3) Press the **Cancel** key to return the machine to the initial state of the maintenance mode.

Model with touch panel

(1) Press the **2** and **5** keys in this order in the initial state of the maintenance mode. "TOTAL:Ver*" is displayed on the LCD.

(2) When you press the **Mono**, ▲ or ▼ key, the display on the LCD changes as shown in the list below.

(3) Press the **X** key to return the machine to the initial state of the maintenance mode.

LCD	Description
MAIN: Ver1.00(A) *1	Main firmware version information (A): Revision information
SUB1 : Ver1.00(P) *1	Sub firmware version information (P): Identifier of PCL/PS *2
ENG : Ver1.00	Engine firmware version information
NET : Ver1.00	Network program version information
HV : Ver1.00 BXXX	High voltage CPU program version and PCB information
PNL:T1308201900	Panel firmware version information (Model with touch panel only)
PNLB:01308051500	Panel boot firmware version information (Model with touch panel only)
B0608071049:5708 *1	Boot program creation date
U0612271600:7B0A *1	Main firmware creation date
D0611301115:E6C3 *1	Demo firmware data creation date
F0612312359:1234 *1	Font firmware creation date
P0612271602:BD40 *1	Sub firmware (PCL/PS) creation date
ROM Check Sum	Check sum self-diagnosis function *3

*1 How to display the check sum information
Press the **OK** key for the model without a touch panel and the **SET** key for the model with a touch panel when its version information is displayed on the LCD to display the check sum information. Press the **OK** or **SET** key again to return to the version information display.

*2 (P) indicates that the firmware supports PCL/PS.

*3 There are two types of check sum information which can be checked with this function. This function checks if these two types of check sum information are matched each other. When you press the **OK** key for the model without a touch panel and the **SET** key for the model with a touch panel while "ROM Check Sum" is displayed, check is automatically conducted for each ROM of each software part. When the check sum is matched, "OK" is displayed on the LCD. When all ROMs result in OK, "ROM Check Sum OK" is displayed at the end, and the operation is finished. When the check sum of any ROM is not matched, "NG" is displayed, and the display stops.

1.3.7 “One Push Demo” setting (Function code 28)

<Function>

The One Push Demo function is to implement demo printing by pressing a specified key, which is mainly used for sales promotion at the shop. This function is disabled once printing is performed from the computer. Change the setting to enable the function.

OnePushDemo = ON (Enabled)/OFF (Disabled)
The setting currently selected is marked “*”.

<Operating procedure>

Model without touch panel

(1) Press the ▲ or ▼ key to display “MAINTENANCE 28” on the LCD in the initial state of the maintenance mode. Then, press the **OK** key. “One Push Demo=ON” is displayed on the LCD.

(2) To enable the function, display “OnePushDemo=ON” using the ▲ or ▼ key. To disable the function, display “OnePushDemo=OFF”.

(3) Press the **OK** key. The displayed setting is confirmed and the machine returns to the initial state of the maintenance mode.

Model with touch panel

(1) Press the **2** and **8** keys in this order in the initial state of the maintenance mode. “One Push Demo=ON” is displayed on the LCD.

(2) To enable the function, display “OnePushDemo=ON” using the ▲ or ▼ key. To disable the function, display “OnePushDemo=OFF”.

(3) Press the **SET** key. The displayed setting is confirmed and the machine returns to the initial state of the maintenance mode.

Note:

- To terminate this operation, press the **Cancel** key for the model without a touch panel and **X** key for the model with a touch panel. The machine returns to the initial state of the maintenance mode.
- Once the One Push Demo function is enabled, printing from a computer does not disable this function unless the power is turned OFF. After the One Push Demo function is enabled, if the power is turned OFF and ON again, and then printing is made from a computer, the function is disabled.

1.3.8 Operational check of sensors (Function code 32)

<Function>

This function is used to check that the sensors are operating normally.

<Operating procedure>

Model without touch panel

(1) Press the ▲ or ▼ key to display "MAINTENANCE 32" on the LCD in the initial state of the maintenance mode. Then, press the **OK** key. "C1C2MPCVRCPO****" is displayed on the LCD. When the T2 paper tray unit is not installed, "C1**MPCVRCPO****" is displayed.

(2) Pressing the **Go** key displays the next group.

Model with touch panel

(1) Press the **3** and **2** keys in this order in the initial state of the maintenance mode. "C1C2MPCVRCPO****" is displayed on the LCD. When the T2 paper tray unit is not installed, "C1**MPCVRCPO****" is displayed.

(2) Pressing the **Mono** key displays the next group.

The table below summarizes the displays on the LCD, sensor names and detection status.

LCD	Sensor names	Detection status (displayed/not displayed)
C1	T1 paper feed sensor	Paper tray 1 not installed/installed
C2	T2 paper feed sensor	T2 paper tray unit not installed/installed
MP	MP paper empty sensor	MP tray paper not detected/detected
CV	Front cover sensor	Front cover closed/open
RC	Back cover sensor	Back cover closed/open
PO	Eject sensor	Paper not detected/detected
L2	T2 plate origin sensor	Plate down of T2 paper tray unit/ Plate up of T2 paper tray unit
T2	T2 connect sensor	T2 paper tray unit connected/not connected
MR	MP registration front sensor	Paper not detected/detected
RM	Registration front sensor	Paper not detected/detected
RA	Registration rear sensor	Paper not detected/detected
FW	Waste toner sensor	Waste toner detected/not detected
NK	New toner sensor (Black)	OFF/ON
NC	New toner sensor (Cyan)	OFF/ON
NM	New toner sensor (Magenta)	OFF/ON
NY	New toner sensor (Yellow)	OFF/ON
KC	Toner sensor (Black)	Toner detected/not detected
CC	Toner sensor (Cyan)	Toner detected/not detected
MC	Toner sensor (Magenta)	Toner detected/not detected
YC	Toner sensor (Yellow)	Toner detected/not detected

LCD	Sensor names	Detection status (displayed/not displayed)
MAC XXC	Internal temperature sensor	XX °C/NG
BT XXC	Belt temperature sensor	0 °C (The value will not be changed since this sensor is not installed.)
TMP XXC	External temperature sensor	XX °C/NG
HUM XXC	External humidity sensor	XX %/NG

Note:
If the external temperature/humidity sensor detects the unusual value, the machine displays "NG" on the LCD.

(3) Check that the display on the LCD is changed when the detection condition of each sensor is changed.
For example, insert paper through the registration front/rear sensor, open the front cover or the back cover, remove the toner cartridge, make a jam at the paper outlet, insert paper from the MP tray, set the paper tray, etc.

(4) Press the **Cancel** key and finish this operation to return the machine to the initial state of the maintenance mode.

(3) Check that the display on the LCD is changed when the detection condition of each sensor is changed.
For example, insert paper through the registration front/rear sensor, open the front cover or the back cover, remove the toner cartridge, make a jam at the paper outlet, insert paper from the MP tray, set the paper tray, etc.

(4) Press the **X** key and finish this operation to return the machine to the initial state of the maintenance mode.

■ Location of sensors

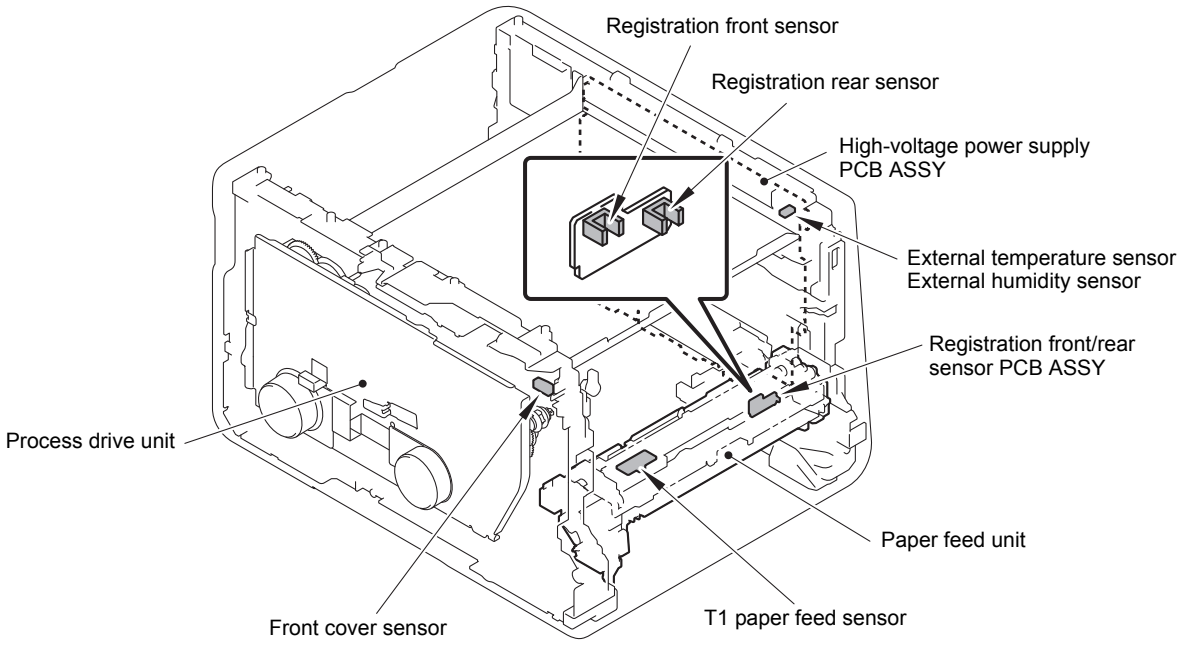

Fig. 5-6

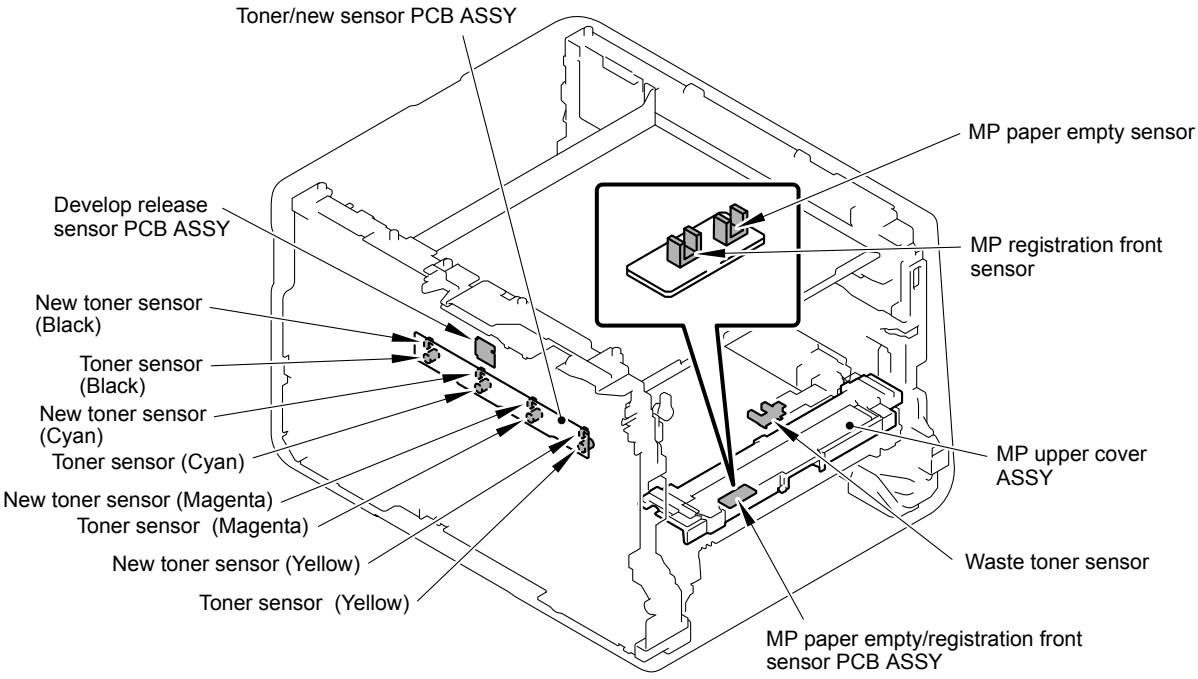
Toner/new sensor PCB ASSY
MP paper empty sensor
Develop release sensor PCB ASSY
MP registration front sensor
New toner sensor (Black)
Toner sensor (Black)
New toner sensor (Cyan)
Toner sensor (Cyan)
New toner sensor (Magenta)
Toner sensor (Magenta)
New toner sensor (Yellow)
Toner sensor (Yellow)
MP upper cover ASSY
Waste toner sensor
MP paper empty/registration front sensor PCB ASSY

Fig. 5-7

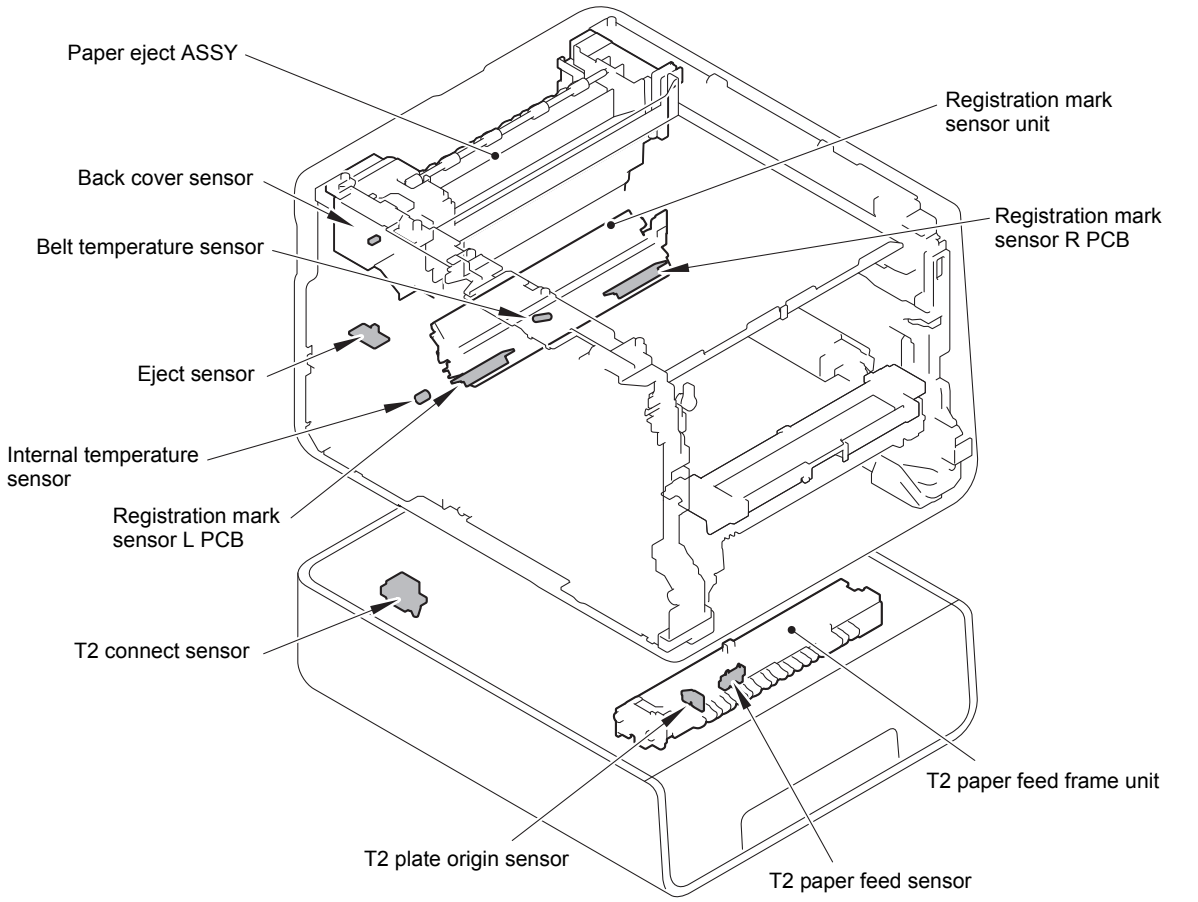
Paper eject ASSY
Registration mark sensor unit
Back cover sensor
Registration mark sensor R PCB
Belt temperature sensor
Eject sensor
Internal temperature sensor
Registration mark sensor L PCB
T2 connect sensor
T2 paper feed frame unit
T2 plate origin sensor
T2 paper feed sensor

Fig. 5-8

1.3.9 LAN connection status display (Function code 33)

<Function>

This function is used to check the connection status of the wired LAN.

<Operating procedure>

Model without touch panel

(1) Press the ▲ or ▼ key to display "MAINTENANCE 33" on the LCD in the initial state of the maintenance mode. Then, press the **OK** key.

(2) Based on the wired LAN connection status of the machine, the corresponding items shown in the table below is displayed on the LCD.

(3) Press the **Cancel** key to return the machine to the initial state of the maintenance mode.

Model with touch panel

(1) Press the **3** key twice in the initial state of the maintenance mode.

(2) Based on the wired LAN connection status of the machine, the corresponding items shown in the table below is displayed on the LCD.

(3) Press the **X** key to return the machine to the initial state of the maintenance mode.

LCD	LAN connection status
Active 100B-FD	100B-FD
Active 100B-HD	100B-HD
Active 10B-FD	10B-FD
Active 10B-HD	10B-HD
Inactive	Not connected.

Confidential

1.3.10 EEPROM Dump Print (Function code 40)

<Function>

This function is to print the EEPROM information.

<Operating procedure>

Model without touch panel

(1) Press the ▲ or ▼ key to display "MAINTENANCE 40" on the LCD in the initial state of the maintenance mode. Then, press the **OK** key. "E2PDUMP ENGN ALL" is displayed on the LCD.

(2) Press the ▲ or ▼ key to select the information you wish to print. Press the **Go** key, and then the "E2DUMP PRINT" is displayed on the LCD.

(3) Press the **Go** key, and then the "E2DUMP PRINTING" is displayed on the LCD. The printer starts to print the EEPROM log.

(4) Upon completion of EEPROM logs printing, the machine returns to the initial state of the maintenance mode.

Model with touch panel

(1) Press the **4** and **0** keys in this order in the initial state of the maintenance mode. "E2PDUMP ENGN ALL" is displayed on the LCD.

(2) Press the ▲ or ▼ key to select the information you wish to print. Press the **SET** key, and then the "E2DUMP PRINT" is displayed on the LCD.

(3) Press the **SET** key, and then the "E2DUMP PRINTING" is displayed on the LCD. The printer starts to print the EEPROM log.

(4) Upon completion of EEPROM logs printing, the machine returns to the initial state of the maintenance mode.

Note:

- Press the **Cancel** key for the model without a touch panel and the **X** key for the model with a touch panel, and finish this operation to return the printer to the initial state of the maintenance mode.
- If an error occurs during printing, it is necessary to start from the beginning.
- The serial number of the machine is printed on the first line on each page.

The terms of EEPROM logs on the LCD are as follows;

LCD	Description
E2PDUMP ENGN ALL	Print of all the values stored in the E2PROM of the engine control unit. (print of 1 page)
E2PDUMP MAIN TOP	Print of the values stored in the E2PROM corresponding to the top 1 Kbytes of the main controller. (print of 1 page)
E2PDUMP MAIN BTM	Print of the values stored in the E2PROM corresponding to the last 1 Kbytes of the main controller. (print of 1 page)
E2PDUMP MAIN REG	Print of the values stored in the E2PROM of the information related to the compensation values of the main controller. (print of 1 page)
E2PDUMP MAIN ALL	Print of all the values stored in the E2PROM of the main controller. (print of 8 pages)

Confidential

1.3.11 Backup of machine information (Function code 41)

<Function>

This function is used to back up the machine information and user setting information into an USB flash memory and restores it when necessary.

- User setting information (Password, user settings, Network settings, etc.)
- Machine information (Preset values, count values, error information, etc.)

However, the following information is not backed up: machine serial number and device and PCB-specific information such as MAC address.

Note:
- The backup and restore procedures can also be used with the maintenance mode operation by end users. However, end uses are allowed to restore the user setting information (Import PI) only and not allowed to restore all the information, such as machine information and user setting information (Import ALL).
- An USB flash memory for backup should have a free space larger than the RAM size of the machine.
- When performing this procedure for any other machine with the same USB flash memory, delete the data previously stored in the USB flash memory.
- If new information is backed up to the USB flash memory where the backup data of the same model is saved, the backup data is overwritten with the new information.

<Operating procedure>

Backup Procedure

Model without touch panel

(1) On the computer, create a “BROTHER” folder in an USB flash memory to be used for saving backup data.
(2) Insert the USB flash memory into the slot of the machine in the initial state of the maintenance mode. The “USB Host Connect” is displayed on the LCD.
(3) Press the ▲ or ▼ key to display “MAINTENANCE 41” and then press the **OK** key. The “Export to USB” is displayed on the LCD.
(4) Press the **OK** key. “*******.seri” is displayed on the LCD. (“*******” shows the name of the model.)
(5) Press the **OK** key. The “Export OK?” is displayed on the LCD.
(6) Press the **OK** key. “Please wait” is displayed on the LCD, and the backup data is saved in an USB flash memory. After the backup data is saved, “USB Host Connect” is displayed on the LCD, and the machine returns to the initial state of the maintenance mode.
(7) Remove the USB flash memory from the machine.

Model with touch panel

(1) On the computer, create a “BROTHER” folder in an USB flash memory to be used for saving backup data.
(2) Insert the USB flash memory into the slot of the machine in the initial state of the maintenance mode. The “USB Host Connect” is displayed on the LCD.
(3) Press the **4** and **1** keys in this order. The “Export to USB” is displayed on the LCD.
(4) Press the **Mono** key. “*******.seri” is displayed on the LCD. (“*******” shows the name of the model.)
(5) Press the **Mono** key. The “Export OK?” is displayed on the LCD.
(6) Press the **Mono** key. “Please wait” is displayed on the LCD, and the backup data is saved in an USB flash memory. After the backup data is saved, “USB Host Connect” is displayed on the LCD, and the machine returns to the initial state of the maintenance mode.
(7) Remove the USB flash memory from the machine.

Note:
- Never remove the USB flash memory from the machine when exporting is in progress.
- If this procedure has been started with the maintenance mode operation by the end user, the machine returns to the ready state after showing the “Please wait” on the LCD.

If an error occurs while executing Function code 41, error items below are displayed on the LCD. Press the **Cancel** key for the model without a touch panel and the **X** key for the model with a touch panel, and the machine returns to the initial state of the maintenance mode. Then, take a measure.

LCD	Cause
USB Mem used	The USB flash memory is being used by another operation.
Insert USB Mem	No USB flash memory is inserted.
No file	The file name is invalid or no “BROTHER” folder exists.
USB Mem Error	USB flash memory error
Write Error	The USB flash memory does not have enough space.

Restoration Procedure

Model without touch panel

(1) Insert the USB flash memory containing the backup data into the slot of the machine in the initial state of the maintenance mode. The “USB Host Connect” is displayed on the LCD.

(2) Press the ▲ or ▼ key to display “MAINTENANCE 41” and then press the **OK** key. The “Export to USB” is displayed on the LCD.

(3) Press the ▲ or ▼ key to display the desired restore method shown below on the LCD, and press the **OK** key. “*******.seri” is displayed on the LCD. (“*******” shows the name of the model.)

(4) Press the **OK** key. The “Reboot OK?” is displayed on the LCD.

(5) Press the **OK** key. “Please wait” is displayed on the LCD and the restoring is performed. Upon completion of restoring, the machine returns to the ready state.

(6) Remove the USB flash memory from the machine.

Model with touch panel

(1) Insert the USB flash memory containing the backup data into the slot of the machine in the initial state of the maintenance mode. The “USB Host Connect” is displayed on the LCD.

(2) Press the **4** and **1** keys in this order. The “Export to USB” is displayed on the LCD.

(3) Press the ▲ or ▼ key to display the desired restore method shown below on the LCD, and press the **Mono** key. “*******.seri” is displayed on the LCD. (“*******” shows the name of the model.)

(4) Press the **Mono** key. The “Reboot OK?” is displayed on the LCD.

(5) Press the **Mono** key. “Please wait” is displayed on the LCD and the restoring is performed. Upon completion of restoring, the machine returns to the ready state.

(6) Remove the USB flash memory from the machine.

Restore methods
“Import PI” for restoring only user setting information
“Import ALL” for restoring all backup data including machine information

Note:
- Never remove the USB flash memory from the machine when exporting is in progress.
- If the serial number of the backup data saved in the USB flash memory and the serial number of the machine do not match, the data cannot be restored.

If an error occurs while executing Function code 41, error items below are displayed on the LCD. Press the **Cancel** key for the model without a touch panel and the **X** key for the model with a touch panel, and the machine returns to the initial state of the maintenance mode. Then, take a measure.

LCD	Cause
USB Mem used	The USB flash memory is being used by another operation.
Insert USB Mem	No USB flash memory is inserted.
No file	The file name is invalid or no “BROTHER” folder exists. There is no backup data.
USB Mem Error	USB flash memory error
Machine ID Error	Serial number does not match. The data is for other machine.
Write Error	A write error occurred.

1.3.12 Changing return value of USB No./Switching Dither Pattern/ Switching of ON/OFF of DirectPrint Color mode-Improve Gray Color/ Switching of timing to execute Auto Registration/ Adjusting left-end print start position on second side in duplex printing/ Change of the transfer current setting/Change of ghost reduction setting (Function code 45)

■ Changing return value of USB No.

<Function>

When the operating system (OS) installed on the computer is Windows Vista®, and the machine is connected to this computer using USB2.0FULL, the OS may not be able to obtain the USB device serial number depending on the computer and USB device. If the serial number cannot be obtained, the number of devices increases each time the device is connected to the computer. To avoid this problem, setting this function to “USBNo.=ON” can fix the USB No. return value to “0”.

LCD	Description
USBNo. =ON	Returns “0”.
USBNo. =OFF	Returns the serial number of the machine. (default)

“*” is displayed at the end of the currently specified function in the LCD display.

<Operating procedure>

Model without touch panel

(1) Press the ▲ or ▼ key to display “MAINTENANCE 45” on the LCD in the initial state of the maintenance mode. Then, press the **OK** key. “USBNo.” is displayed on the LCD.

(2) Press the **OK** or **Go** key. “USBNo.=ON” is displayed on the LCD.

(3) Press the ▲ or ▼ key to select “USBNo.=ON” or “USBNo.=OFF”, and press the **OK** or **Go** key.

(4) “Accepted” is displayed on the LCD, and the machine returns to the initial state of the maintenance mode.

(5) Turn OFF the power switch of the machine.

Model with touch panel

(1) Press the **4** and **5** keys in this order in the initial state of the maintenance mode. “USBNo.” is displayed on the LCD.

(2) Press the **Mono** or **SET** key. “USBNo.=ON” is displayed on the LCD.

(3) Press the ▲ or ▼ key to select “USBNo.=ON” or “USBNo.=OFF”, and press the **Mono** or **SET** key.

(4) “Accepted” is displayed on the LCD, and the machine returns to the initial state of the maintenance mode.

(5) Turn OFF the power switch of the machine.

Note:
This function is enabled when the power of the machine is turned OFF and ON.

■ Switching Dither Pattern

<Function>

This function is to switch the dither pattern when printed letters and/or slanted lines are not smooth, and thin lines are rough or uneven.

LCD	Description
PS.DitherType=0	Dither Pattern 0 is selected. (A dither pattern which improves roughness of letters and slanted lines) (default)
PS.DitherType=1	Dither Pattern 1 is selected. (A dither pattern which alleviates banding)

"*" is displayed at the end of the currently specified function in the LCD display.

<Operating procedure>

Model without touch panel

(1) Press the ▲ or ▼ key to display "MAINTENANCE 45" on the LCD in the initial state of the maintenance mode. Then, press the **OK** key. "USBNo." is displayed on the LCD.

(2) Press the ▲ or ▼ key to display "PS.DitherType" and then press the **OK** or **Go** key.

(3) Press the ▲ or ▼ key to select "PS.DitherType=0" or "PS.DitherType=1", and press the **OK** or **Go** key.

(4) "Accepted" is displayed on the LCD, and the machine returns to the initial state of the maintenance mode.

Model with touch panel

(1) Press the **4** and **5** keys in this order in the initial state of the maintenance mode. "USBNo." is displayed on the LCD.

(2) Press the ▼ or ▲ key to display "PS.DitherType" and then press the **Mono** or **SET** key.

(3) Press the ▲ or ▼ key to select "PS.DitherType=0" or "PS.DitherType=1", and press the **Mono** or **SET** key.

(4) "Accepted" is displayed on the LCD, and the machine returns to the initial state of the maintenance mode.

■ Switching of ON/OFF of DirectPrint Color mode-Improve Gray Color

<Function>

This function is to switch ON/OFF of the print control for the gray color when other colors are slightly blended in the gray color or the gray color is uneven upon printing.

LCD	Description
DP.ImpGray=ON	DirectPrint Color mode - Improve Gray Color. (Print control for gray color) ON (Improves the symptom that other colors are slightly blended in the gray color.) (default)
DP.ImpGray=OFF	DirectPrint Color mode - Improve Gray Color. (Print control for gray color) OFF (Improves the unevenness of the gray color.)

"*" is displayed at the end of the currently specified function in the LCD display.

<Operating procedure>

Model without touch panel

(1) Press the ▲ or ▼ key to display "MAINTENANCE 45" on the LCD in the initial state of the maintenance mode. Then, press the **OK** key. "USBNo." is displayed on the LCD.

(2) Press the ▲ or ▼ key to display "DP.ImpGray" and then press the **OK** or **Go** key.

(3) Press the ▲ or ▼ key to select "DP.ImpGray=ON" or "DP.ImpGray=OFF", and press the **OK** or **Go** key.

(4) "Accepted" is displayed on the LCD, and the machine returns to the initial state of the maintenance mode.

Model with touch panel

(1) Press the **4** and **5** keys in this order in the initial state of the maintenance mode. "USBNo." is displayed on the LCD.

(2) Press the ▲ or ▼ key to display "DP.ImpGray" and then press the **Mono** or **SET** key.

(3) Press the ▲ or ▼ key to select "DP.ImpGray=ON" or "DP.ImpGray=OFF", and press the **Mono** or **SET** key.

(4) "Accepted" is displayed on the LCD, and the machine returns to the initial state of the maintenance mode.

■ Switching of timing to execute Auto Registration

<Function>

Relative displacement between Cyan, Magenta, Yellow, and Black is detected using the registration mark sensor, and the Auto Registration is executed at the timing when the displacement value exceeds the stipulated threshold value.

This function is to switch the threshold value which is used as the timing to execute Auto Registration. The threshold value can be switched in three phases between High, Mid, and Low.

LCD	Description
Reg Freq=Mid	The frequency to execute Auto Registration is middle. (default)
Reg Freq=High	The frequency to execute Auto Registration is high.
Reg Freq=Low	The frequency to execute Auto Registration is low.

"*" is displayed at the end of the currently specified function in the LCD display.

Note:
It can be set regardless of the Auto Registration switching function in the function menu. Even if this function is switched, it does not affect the timing to execute Auto Registration in the function menu.

<Operating procedure>

Model without touch panel

(1) Press the ▲ or ▼ key to display "MAINTENANCE 45" on the LCD in the initial state of the maintenance mode. Then, press the **OK** key. "USBNo." is displayed on the LCD.

(2) Press the ▲ or ▼ key to display "RegiFreq" and then press the **OK** or **Go** key.

(3) Press the ▲ or ▼ key to select "RegiFreq=Mid", "RegiFreq=High" or "RegiFreq=Low", and press the **OK** or **Go** key.

(4) "Accepted" is displayed on the LCD, and the machine returns to the initial state of the maintenance mode.

Model with touch panel

(1) Press the **4** and **5** keys in this order in the initial state of the maintenance mode. "USBNo." is displayed on the LCD.

(2) Press the ▲ or ▼ key to display "RegiFreq" and then press the **Mono** or **SET** key.

(3) Press the ▲ or ▼ key to select "RegiFreq=Mid", "RegiFreq=High" or "RegiFreq=Low", and press the **Mono** or **SET** key.

(4) "Accepted" is displayed on the LCD, and the machine returns to the initial state of the maintenance mode.

■ Adjusting left-end print start position on second side in duplex printing

<Function>

This function is to adjust the left-end print start position on the second side in the left and right direction if it is displaced in duplex printing. The adjustable range is -100 to 750 (unit: 300 dpi) (The minus direction means the left direction.)

<Operating procedure>

Model without touch panel

(1) Press the ▲ or ▼ key to display "MAINTENANCE 45" on the LCD in the initial state of the maintenance mode. Then, press the **OK** key. "USBNo." is displayed on the LCD.

(2) Press the ▲ or ▼ key to display "DX.XAdjust" and then press the **OK** or **Go** key. "DX.XAdjust=**" is displayed on the LCD.

(3) To move the print start position to the left, press the ▼ key and decrease the value. To move the print start position to the right, press the ▲ key and increase the value.

(4) When the value is changed to the adjustment value, press the **OK** or **Go** key. "Accepted" is displayed on the LCD, and the machine returns to the initial state of the maintenance mode.

Model with touch panel

(1) Press the **4** and **5** keys in this order in the initial state of the maintenance mode. "USBNo." is displayed on the LCD.

(2) Press the ▲ or ▼ key to display "DX.XAdjust" and then press the **Mono** or **SET** key. "DX.XAdjust=**" is displayed on the LCD.

(3) To move the print start position to the left, press the ▼ key and decrease the value. To move the print start position to the right, press the ▲ key and increase the value.

(4) When the value is changed to the adjustment value, press the **Mono** or **SET** key. "Accepted" is displayed on the LCD, and the machine returns to the initial state of the maintenance mode.

Confidential

■ Change of the transfer current setting (Only for Japanese hagaki printing)

<Function>

Dots appeared when hagaki printing is performed can be alleviated by changing the transfer current setting.

<Operating procedure>

Model without touch panel

(1) Press the ▲ or ▼ key to display "MAINTENANCE 45" on the LCD in the initial state of the maintenance mode. Then, press the **OK** key. "USBNo." is displayed on the LCD.

(2) Press the ▲ or ▼ key to display "Special Printing" and then press the **OK** or **Go** key. "Default" is displayed on the LCD.

(3) Press the ▲ or ▼ key to change the setting, and press the **OK** or **Go** key. There are four setting options: "Default", "HAGAKI1", "HAGAKI2", and "HAGAKI3". ("*" is displayed at the end of the currently specified function in the LCD display. The initial value is "Default".)

(4) "Accepted" is displayed on the LCD, and the machine returns to the initial state of the maintenance mode.

(5) Perform hagaki printing again to check if the dot symptom is alleviated.

(6) If not, repeat the steps (1) to (4) to set an optimum option, and then perform hagaki printing.

Model with touch panel

(1) Press the **4** and **5** keys in this order in the initial state of the maintenance mode. "USBNo." is displayed on the LCD.

(2) Press the ▲ or ▼ key to display "Special Printing" and then press the **Mono** or **SET** key. "Default" is displayed on the LCD.

(3) Press the ▲ or ▼ key to change the setting, and press the **Mono** or **SET** key. There are four setting options: "Default", "HAGAKI1", "HAGAKI2", and "HAGAKI3". ("*" is displayed at the end of the currently specified function in the LCD display. The initial value is "Default".)

(4) "Accepted" is displayed on the LCD, and the machine returns to the initial state of the maintenance mode.

(5) Perform hagaki printing again to check if the dot symptom is alleviated.

(6) If not, repeat the steps (1) to (4) to set an optimum option, and then perform hagaki printing.

■ Change of ghost reduction setting

<Function>

This function is a mode to reduce the level of ghost when it appears in low temperature and high humidity environment. If this function is turned ON, however, spots and dirt may appear on print.

LCD	Description
ON	Turn ON the ghost reduction function.
OFF	Turn OFF the ghost reduction function. (default)

"*" is displayed at the end of the currently specified function in the LCD display.

<Operating procedure>

Model without touch panel

(1) Press the ▲ or ▼ key to display "MAINTENANCE 45" on the LCD in the initial state of the maintenance mode. Then, press the **OK** key. "USBNo." is displayed on the LCD.

(2) Press the ▲ or ▼ key to display "Ghost Reduction" and then press the **OK** or **Go** key.

(3) Press the ▲ or ▼ key to select "ON" or "OFF", and press the **OK** or **Go** key.

(4) "Accepted" is displayed on the LCD, and the machine returns to the initial state of the maintenance mode.

Model with touch panel

(1) Press the **4** and **5** keys in this order in the initial state of the maintenance mode. "USBNo." is displayed on the LCD.

(2) Press the ▲ or ▼ key to display "Ghost Reduction" and then press the **Mono** or **SET** key.

(3) Press the ▲ or ▼ key to select "ON" or "OFF", and press the **Mono** or **SET** key.

(4) "Accepted" is displayed on the LCD, and the machine returns to the initial state of the maintenance mode.

1.3.13 Motor reset (Function code 57)

<Function>

When the main PCB or each motor is replaced, the main PCB needs to identify each motor. If you reset the identification of each motor in the main PCB with this function, when the power is turned ON next time, a motor identification operation for each motor is performed before the engine performs a warm-up.

<Operating procedure>

Model without touch panel

(1) Press the ▲ or ▼ key to display "MAINTENANCE 57" on the LCD in the initial state of the maintenance mode. Then, press the **OK** key. "MOTOR RESET" is displayed on the LCD.

(2) When the **Go** key is pressed, each motor identification result is reset and "PLZ POWER OFF/ON" is displayed on the LCD.

(3) Turn OFF/ON the power switch to perform a motor identification operation for each motor and the machine returns to the ready state.

Model with touch panel

(1) Press the **5** and **7** keys in this order in the initial state of the maintenance mode.
"RESET MOTOR" is displayed on the LCD.

(2) When the **Mono** key is pressed, each motor identification result is reset and "PLZ POWER OFF/ON" is displayed on the LCD.

(3) Turn OFF/ON the power switch to perform a motor identification operation for each motor and the machine returns to the ready state.

Note:
If "PLZ POWER OFF/ON" is displayed on the LCD, any keys other than the power switch are not accepted.

1.3.14 Adjustment of touch panel (Function code 61) (Model with touch panel only)

<Function>

This function is used to adjust the detection area on the touch panel.

Note:
This adjustment requires a touch panel stylus with a thin tip. A commercially available stylus designed for electronic dictionaries or personal digital assistance (PDA) can be used. If you do not have it on hand, order the “TOUCH PEN” from the Brother's parts list.

<Operating procedure>

(1) Press the **6** and **1** keys in this order in the initial state of the maintenance mode. The adjustment screens shown below are displayed on the LCD.

(2) Touch the center of the symbol on the top left of the screen with a touch panel stylus. The symbol is not displayed upon touching it. Then touch the symbol on the bottom left. In the same way, touch the symbols on bottom right, top right, and center in this order.

Note:
- Do not use tools other than a touch panel stylus. Especially, never use a pointed one, e.g., a screwdriver. Using such a tool damages the touch panel.
- When performing this adjustment, do not touch the panel with your fingers. Doing so deteriorates detection accuracy and correct adjustment cannot be obtained.
- If no operation is performed for one minute or the **X** key is pressed, the machine returns to the initial state of the maintenance mode.

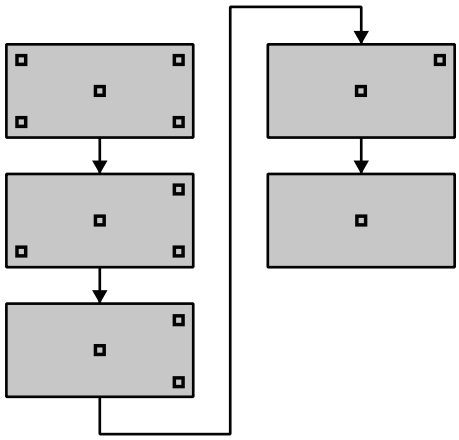

Fig. 5-9

(3) When you press the symbol at the center (the 5th symbol), “OK” is displayed if the specified area is correctly adjusted. Then, the machine returns to the initial state of the maintenance mode.

Note:
If “NG” is displayed on the LCD and “NG” is displayed again when repeating this adjustment twice or three times, check the touch panel harness for connection failure. If “NG” is displayed in spite of the proper connection of the harness, replace the LCD panel ASSY.

1.3.15 Adjustment of color registration (Adjustment of inter-color position alignment) (Function code 66)

<Function>

This function allows service personnel to forcibly activate the adjustment of color registration (adjustment of inter-color position alignment) function which is usually executed automatically under a specified condition. If adjustment of inter-color position alignment (auto) fails because toner reaches its life, etc, you can adjust inter-color position alignment manually. The end users are allowed to perform “Adjustment of inter-color position alignment without registration sensor calibration (auto)”, “Printing of misregistration correction chart” and “Adjustment of inter-color position alignment (manual)” only.

Note:

If an error occurs after executing Maintenance mode 66, upgrade the firmware to the latest one. (Refer to “1.1 Installing the Firmware (Sub Firmware, Panel Firmware, Main Firmware, and High-voltage Firmware)” in Chapter 4.) After upgrading the firmware, execute Maintenance mode 66 again.

This function has the following functions.

Function	Description	LCD
Adjustment of inter-color position alignment without registration sensor calibration (auto)	Automatically correct misregistration between colors that occurs as the number of printed pages increases and time passes.	REGISTRATION
Printing of misregistration correction chart	Print the chart that you check for an input value when manually correcting misregistration between colors.	PRINT CHART
Input of sensor offset value	Unavailable for maintenance work.	OFFSET ADJUST
Adjustment of inter-color position alignment (manual)	Using the chart, manually correct misregistration between colors that occurs as the number of printed pages increases and time passes. This is performed when automatic adjustment fails.	SET REGISTRATION
Adjustment of inter-color position alignment including registration sensor calibration (auto)	After the sensitivity adjustment of registration sensor, correct misregistration between colors that occurs as the number of printed pages increases and time passes.	ADD REGISTRATION

■ Adjustment of inter-color position alignment without registration sensor calibration (auto)

<Operating procedure>

Model without touch panel

(1) Press the ▲ or ▼ key to display "MAINTENANCE 66" on the LCD in the initial state of the maintenance mode. Then, press the **OK** key. "REGISTRATION" is displayed on the LCD.

(2) Press the **Go** key. "PLS WAIT 66-1" is displayed on the LCD, and adjustment of inter-color position alignment is automatically done.

(3) When this operation is completed without an error, "COMPLETED" is displayed on the LCD.

(4) Press the **Cancel** key to return the machine to the initial state of the maintenance mode.

Model with touch panel

(1) Press the **6** key twice in the initial state of the maintenance mode. "REGISTRATION" is displayed on the LCD.

(2) Press the **SET** key. "PLS WAIT 66-1" is displayed on the LCD, and adjustment of inter-color position alignment is automatically done.

(3) When this operation is completed without an error, "COMPLETED" is displayed on the LCD.

(4) Press the **X** key to return the machine to the initial state of the maintenance mode.

Note:
If the Adjustment of inter-color position alignment without registration sensor calibration (auto) fails while being in process, "ERROR 66-1" is displayed on the LCD. Refer to the error message list in the table below for the troubleshooting.

■ Error message list

Error message	Measure
FAILED REGIST	Press the **Go** key for the model without a touch panel and the **Mono** key for the model with a touch panel to clear the error. Perform the Adjustment of inter-color position alignment (auto) again. If the error recurs, clean the belt unit and the drum unit and then perform the adjustment again. If the error still recurs, replace the belt unit and the drum unit.
TONER EMPTY # *	Replace the empty toner cartridge and press the **Go** key for the model without a touch panel and the **Mono** key for the model with a touch panel to clear the error. Perform the Adjustment of inter-color position alignment (auto) again.
NG * L:C080 R:M105	Press the **Go** key for the model without a touch panel and the **Mono** key for the model with a touch panel to clear the error. Perform the Adjustment of inter-color position alignment (auto) again.
NG R-L:C030	
NG PWM L120 R180	
NG PWM R-L:080	
NG CNT R100 L100	
NG S-POSI R:080	
NG SKEW:120	
NG PWM R-P L:080	
NG XMARGIN:M191	
Cover is Open	Close the front cover.

* # indicates the toner color (Y, M, or C) of which cartridge became empty.

■ Printing of misregistration correction chart

<Operating procedure>

Model without touch panel

(1) Press the ▲ or ▼ key to display “MAINTENANCE 66” on the LCD in the initial state of the maintenance mode. Then, press the **OK** key. “REGISTRATION” is displayed on the LCD.

(2) Press the ▲ or ▼ key to display “PRINT CHART” on the LCD.

(3) Press the **Go** key. “PRINTING” is displayed on the LCD, and misregistration correction chart (see the figure below) is printed. When printing is finished, “PRINT CHART” is displayed on the LCD.

(4) Press the **Cancel** key to return the machine to the initial state of the maintenance mode.

Model with touch panel

(1) Press the **6** key twice in the initial state of the maintenance mode. “REGISTRATION” is displayed on the LCD.

(2) Press the ▲ or ▼ key to display “PRINT CHART” on the LCD.

(3) Press the **SET** key. “PRINTING” is displayed on the LCD, and misregistration correction chart (see the figure below) is printed. When printing is finished, “PRINT CHART” is displayed on the LCD.

(4) Press the **X** key to return the machine to the initial state of the maintenance mode.

■ Misregistration correction chart

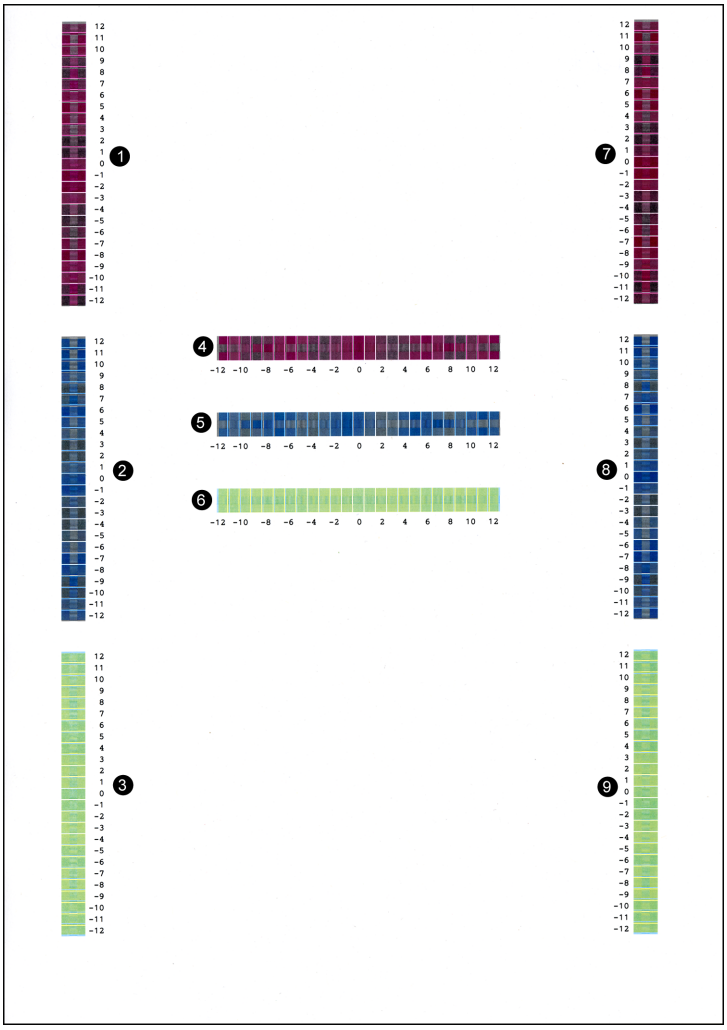

Fig. 5-10

Confidential

■ Adjustment of inter-color position alignment (manual)

<Operating procedure>

Model without touch panel

(1) Press the ▲ or ▼ key to display "MAINTENANCE 66" on the LCD in the initial state of the maintenance mode. Then, press the **OK** key. "REGISTRATION" is displayed on the LCD.
(2) Press the ▲ or ▼ key to display "SET REGISTRATION" on the LCD.
(3) Press the **Go** key. "1. MAGENTA=0" is displayed on the LCD. Using the misregistration correction chart printed by "■ Misregistration correction chart", identify the numeric value whose color is the darkest in the pattern of (1) (Magenta Left).
Press the ▲ or ▼ key to display the identified numeric value.
(4) Press the **Go** key, and enter each numeric value of the patterns (2) to (9) in the same way.
(5) When you enter the numeric value of the pattern (9) (Yellow Right), "COMPLETED" is displayed on the LCD.
(6) Press the **Cancel** key to return the machine to the initial state of the maintenance mode.

Model with touch panel

(1) Press the **6** key twice in the initial state of the maintenance mode. "REGISTRATION" is displayed on the LCD.
(2) Press the ▲ or ▼ key to display "SET REGISTRATION" on the LCD.
(3) Press the **SET** key. "1. MAGENTA=0" is displayed on the LCD. Using the misregistration correction chart printed by "■ Misregistration correction chart", identify the numeric value whose color is the darkest in the pattern of (1) (Magenta Left).
Press the ▲ or ▼ key to display the identified numeric value.
(4) Press the **SET** key, and enter each numeric value of the patterns (2) to (9) in the same way.
(5) When you enter the numeric value of the pattern (9) (Yellow Right), "COMPLETED" is displayed on the LCD.
(6) Press the **X** key to return the machine to the initial state of the maintenance mode.

■ Adjustment of inter-color position alignment including registration sensor calibration (auto)

<Operating procedure>

Model without touch panel

(1) Press the ▲ or ▼ key to display "MAINTENANCE 66" on the LCD in the initial state of the maintenance mode. Then, press the **OK** key. "REGISTRATION" is displayed on the LCD.
(2) Press the ▲ or ▼ key to display "ADD REGISTRATION" on the LCD.
(3) Press the **Go** key. "PLS WAIT 66-1" is displayed on the LCD and sensitivity adjustment of registration sensor and adjustment of inter-color position alignment are performed automatically.
(4) When this operation is completed without an error, "COMPLETED" is displayed on the LCD.
(5) Press the **Cancel** key to return the machine to the initial state of the maintenance mode.

Model with touch panel

(1) Press the **6** key twice in the initial state of the maintenance mode. "REGISTRATION" is displayed on the LCD.
(2) Press the ▲ or ▼ key to display "ADD REGISTRATION" on the LCD.
(3) Press the **SET** key. "PLS WAIT 66-1" is displayed on the LCD and sensitivity adjustment of registration sensor and adjustment of inter-color position alignment are performed automatically.
(4) When this operation is completed without an error, "COMPLETED" is displayed on the LCD.
(5) Press the **X** key to return the machine to the initial state of the maintenance mode.

Note:
If the Adjustment of inter-color position alignment including registration sensor calibration (auto) fails while being in process, "ERROR 66-1" is displayed on the LCD. Refer to the error message list on P5-31 for the troubleshooting.

1.3.16 Continuous print test (Function code 67)

<Function>

This function is used to conduct paper feed and eject tests while printing patterns.

<Operating procedure>

Model without touch panel

(1) Press the ▲ or ▼ key to display "MAINTENANCE 67" on the LCD in the initial state of the maintenance mode. Then, press the **OK** key. "SELECT: K 100%" is displayed on the LCD.

(2) Referring to the <Print pattern> table, press the ▲ or ▼ key to select the desired print pattern and press the **OK** key. "SELECT: A4" is displayed on the LCD.

(3) Referring to the <Paper size> table, press the ▲ or ▼ key to select the desired paper size and press the **OK** key. "SELECT: PLAIN" is displayed on the LCD.

(4) Referring to the <Print specifications> table, press the ▲ or ▼ key to select the desired media specifications and press the **OK** key. "SELECT: TRAY1 SX" is displayed on the LCD.

(5) Referring to the <Print type> table, press the ▲ or ▼ key to select the desired print type and press the **OK** key. "SELECT: 1PAGE" is displayed on the LCD.

(6) Referring to the <Number of pages to be printed> table, press the ▲ or ▼ key to select the desired number of pages to be printed and press the **OK** key. For the intermittent pattern printing only, "SELECT: 1P/JOB" is displayed on the LCD. For other than intermittent pattern printing, go to step (8).

(7) Referring to the <Number of pages per job> (Intermittent pattern printing only) table, press the ▲ or ▼ key to select the desired number of pages per job and press the **OK** key.

(8) "PAPER FEED TEST" is displayed on the LCD and the test pattern starts to be printed under the selected items for paper feed test.

(9) If you press the **Cancel** key, printing of test pattern is interrupted and the machine returns to the initial state of the maintenance mode.

Model with touch panel

(1) Press the **6** and **7** keys in this order in the initial state of the maintenance mode. "SELECT: K 100%" is displayed on the LCD.

(2) Referring to the <Print pattern> table, press the ▲ or ▼ key to select the desired print pattern and press the **SET** key. "SELECT: A4" is displayed on the LCD.

(3) Referring to the <Paper size> table, press the ▲ or ▼ key to select the desired paper size and press the **SET** key. "SELECT: PLAIN" is displayed on the LCD.

(4) Referring to the <Print specifications> table, press the ▲ or ▼ key to select the desired media specifications and press the **SET** key. "SELECT: TRAY1 SX" is displayed on the LCD.

(5) Referring to the <Print type> table, press the ▲ or ▼ key to select the desired print type and press the **SET** key. "SELECT: 1PAGE" is displayed on the LCD.

(6) Referring to the <Number of pages to be printed> table, press the ▲ or ▼ key to select the desired number of pages to be printed and press the **SET** key. For the intermittent pattern printing only, "SELECT: 1P/JOB" is displayed on the LCD. For other than intermittent pattern printing, go to step (8).

(7) Referring to the <Number of pages per job> (Intermittent pattern printing only) table, press the ▲ or ▼ key to select the desired number of pages per job and press the **SET** key.

(8) "PAPER FEED TEST" is displayed on the LCD and the test pattern starts to be printed under the selected items for paper feed test.

(9) If you press the **X** key, printing of test pattern is interrupted and the machine returns to the initial state of the maintenance mode.

<Print pattern>

LCD	Description
SELECT: K 100%	Black 100% solid print
SELECT: C 100%	Cyan 100% solid print
SELECT: M 100%	Magenta 100% solid print
SELECT: Y 100%	Yellow 100% solid print
SELECT: W 100%	White 100% solid print
SELECT: R 100%	Red 100% solid print
SELECT: G 100%	Green 100% solid print
SELECT: B 100%	Blue 100% solid print
SELECT: KCMY1%	Black/Cyan/Magenta/Yellow 1% intermittent pattern print *
SELECT: KCMY5%	Black/Cyan/Magenta/Yellow 5% intermittent pattern print *
SELECT: Lattice	Lattice print
SELECT: Total	Total pattern print

* Up to 500 sheets in one-sided printing and 1,000 sheets in two-sided printing in the case of job printing.

<Paper size>

LCD	Description
SELECT: A4	A4-size
SELECT: LETTER	Letter-size
SELECT:ISOB5	ISO B5-size
SELECT:JISB5	JIS B5-size
SELECT:A5	A5-size
SELECT:A5L	A5L-size
SELECT:JISB6	JIS B6-size
SELECT:A6	A6-size
SELECT:EXECUTE	Executive-size
SELECT:LEGAL	Legal-size
SELECT:FOLIO	Folio-size
SELECT:HAGAKI	Postcard-size

<Print specifications>

LCD	Description
SELECT: PLAIN	Plain paper
SELECT: THICK	Thick paper
SELECT: THIN	Thin paper
SELECT:THICKER	Thicker paper
SELECT:RECYCLED	Recycled paper
SELECT:BOND	Bond paper
SELECT:LABEL	Label
SELECT:ENVELOPE	Envelopes
SELECT:ENVTHIN	Env. Thin
SELECT:ENVTHICK	Env. Thick
SELECT:GLOSSY	Glossy paper
SELECT:HAGAKI	Postcard

<Print type>

LCD	Description
SELECT: TRAY1 SX	One-sided printing from Paper tray 1
SELECT:TRAY2 SX	One-sided printing from T2 paper tray unit
SELECT: MP SX	One-sided printing from MP tray
SELECT: TRAY1 DX	Two-sided printing from Paper tray 1
SELECT:TRAY2 DX	Two-sided printing from T2 paper tray unit
SELECT: MP DX	Two-sided printing from MP tray

<Number of pages to be printed>

LCD	Description
SELECT: 1PAGE	One page printing
SELECT: CONTINUE	Continuous printing
SELECT: JOB	Intermittent printing by each unit *

* Selectable only when “KCMY1%” or “KCMY5%” is selected as print pattern and a tray other than the MP tray is selected as print type.

<Number of pages per job> (Intermittent pattern printing only)

LCD	Description
SELECT: 1P/JOB	Printing 1 page per job *1
SELECT: 2P/JOB	Printing 2 page per job *1
SELECT: 5P/JOB	Printing 5 page per job *1
SELECT: 2I/JOB	Printing 2 images per job *2
SELECT: 5I/JOB	Printing 5 images per job *2 *3
SELECT: 10I/JOB	Printing 10 images per job *2

*1 Selectable only when SX is selected as print type.

*2 Selectable only when DX is selected as print type.

*3 One-sided printing for the 5th page.

■ Print pattern

SELECT: K 100%

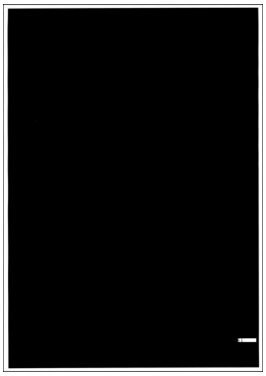

SELECT: C 100%

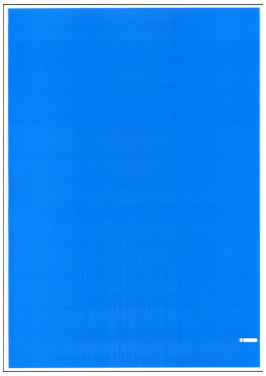

SELECT: M 100%

SELECT: Y 100%

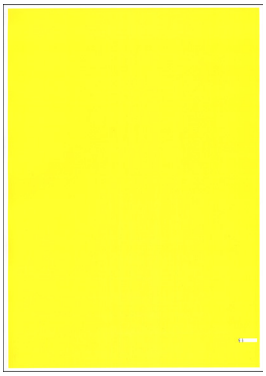

SELECT: W 100%

SELECT: R 100%

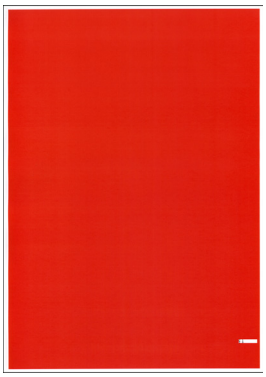

SELECT: G 100%

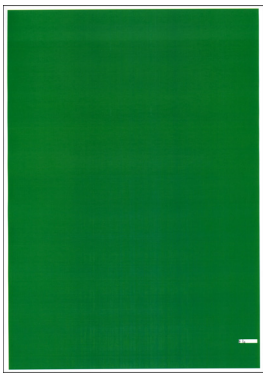

SELECT: B 100%

SELECT: KCMY1%

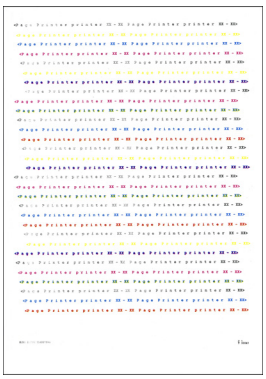

SELECT: KCMY5%

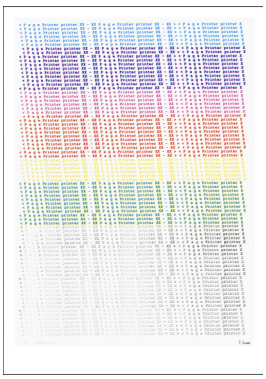

SELECT: Lattice

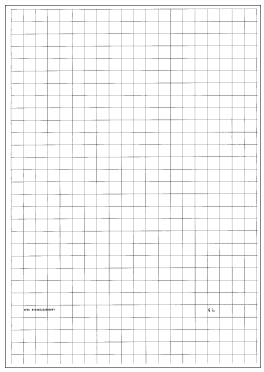

SELECT: Total (When Print type is SX)

SELECT: Total (When Print type is DX)

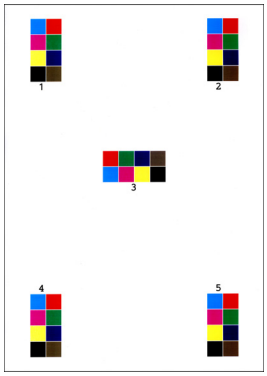

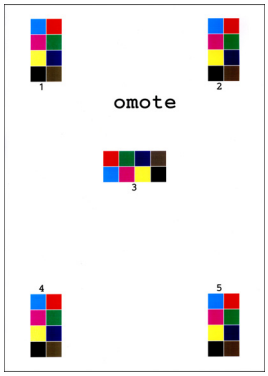

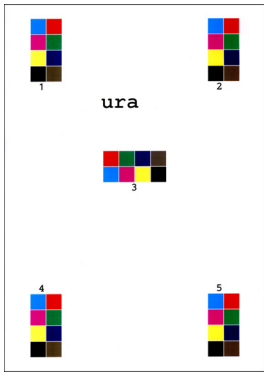

Fig. 5-11

Confidential

1.3.17 Laser unit test pattern print (Function code 68)

<Function>

This function is used to print the laser unit test patterns and check if there is any failure in the laser unit.

<Operating procedure>

Model without touch panel

(1) Press the ▲ or ▼ key to display "MAINTENANCE 68" on the LCD in the initial state of the maintenance mode. Then, press the **OK** key. "PRINTING" is displayed on the LCD, and one laser unit test pattern (see the figure below) is printed.
(2) When this operation is completed without an error, "SCANNER CHECK" is displayed on the LCD.
(3) Press the **Cancel** key and finish this operation to return the machine to the initial state of the maintenance mode.

Model with touch panel

(1) Press the **6** and **8** keys in this order in the initial state of the maintenance mode. "PRINTING" is displayed on the LCD, and one laser unit test pattern (see the figure below) is printed.
(2) When this operation is completed without an error, "SCANNER CHECK" is displayed on the LCD.
(3) Press the **X** key and finish this operation to return the machine to the initial state of the maintenance mode.

Note:
When printing fails, the following error indications are displayed on the LCD. When the error factors are removed, and the **Go** key for the model without a touch panel and the **Mono** key for the model with a touch panel is pressed, the machine automatically recovers to the re-executable state. "PRINTING" is displayed on the LCD, and the laser unit test pattern is printed on a sheet.

Error message	Measure
Replace Toner # *	Replace the empty toner cartridge and press the **Go** key for the model without a touch panel and the **Mono** key for the model with a touch panel to clear the error.
Cover is Open	Close the front cover.
No Paper	Load paper into the paper tray, close the paper tray, and press the **Go** key for the model without a touch panel and the **Mono** key for the model with a touch panel to clear the error.
Jam Tray1	Remove the jammed paper, close the paper tray and all the covers, and press the **Go** key for the model without a touch panel and the **Mono** key for the model with a touch panel to clear the error.
Jam Rear	

* # indicates the toner color (K, Y, M, or C) of which cartridge became empty.

■ Laser unit test pattern

Fig. 5-12

1.3.18 Frame pattern print (One-sided) (Function code 69)

<Function>

This function is used to print one page of the frame pattern of the external circumference in one-sided printing and check if there is any deviation or omission of print.

<Operating procedure>

Model without touch panel

(1) Load the paper whose size matches the default paper setting (A4 or Letter) into the paper tray.
(2) Press the ▲ or ▼ key to display "MAINTENANCE 69" on the LCD in the initial state of the maintenance mode. Then, press the **OK** key. "PRINTING" is displayed on the LCD, and the frame pattern (see the figure below) is printed on a single side of the paper.
(3) When print is completed, "WAKU SX" is displayed on the LCD.
(4) Press the **Cancel** key and finish this operation to return the machine to the initial state of the maintenance mode.

Model with touch panel

(1) Load the paper whose size matches the default paper setting (A4 or Letter) into the paper tray.
(2) Press the **6** and **9** keys in this order in the initial state of the maintenance mode. "PRINTING" is displayed on the LCD, and the frame pattern (see the figure below) is printed on a single side of the paper.
(3) When print is completed, "WAKU SX" is displayed on the LCD.
(4) Press the **X** key and finish this operation to return the machine to the initial state of the maintenance mode.

Note:

If printing fails, the following error indications are displayed on the LCD, and printing is cancelled. To print again, refer to the measures in the table below and remove the cause of the error. Then, press the **Go** key for the model without a touch panel and the **Mono** key for the model with a touch panel. "PRINTING" is displayed on the LCD, and the frame pattern is printed on a single sheet.

Error message	Measure
Replace Toner	Replace the empty toner cartridge and press the **Go** key for the model without a touch panel and the **Mono** key for the model with a touch panel to clear the error.
Cover is Open	Close the front cover.
No Paper	Load paper into the paper tray, close the paper tray, and press the **Go** key for the model without a touch panel and the **Mono** key for the model with a touch panel to clear the error.
Jam Tray1	Remove the jammed paper, close the paper tray and all the covers, and press the **Go** key for the model without a touch panel and the **Mono** key for the model with a touch panel to clear the error.
Jam Rear	

■ **Frame pattern**

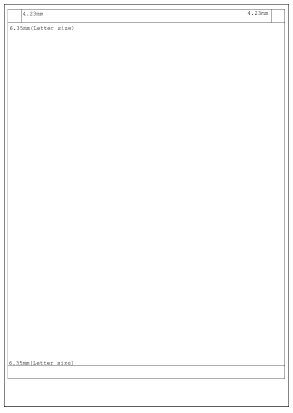

Fig. 5-13

1.3.19 Frame pattern print (Two-sided) (Function code 70)

<Function>

This function is used to print one page of the frame pattern of the external circumference in two-sided printing and check if there is any deviation or omission of print.

<Operating procedure>

Model without touch panel

(1) Load the paper whose size matches the default paper setting (A4 or Letter) into the paper tray.
(2) Press the ▲ or ▼ key to display "MAINTENANCE 70" on the LCD in the initial state of the maintenance mode. Then, press the **OK** key. "PRINTING" is displayed on the LCD, and the frame pattern (see the figure below) is printed on both sides of the paper.
(3) When print is completed, "WAKU DX" is displayed on the LCD.
(4) Press the **Cancel** key to return the machine to the initial state of the maintenance mode.

Model with touch panel

(1) Load the paper whose size matches the default paper setting (A4 or Letter) into the paper tray.
(2) Press the **7** and **0** keys in this order in the initial state of the maintenance mode. "PRINTING" is displayed on the LCD, and the frame pattern (see the figure below) is printed on both sides of the paper.
(3) When print is completed, "WAKU DX" is displayed on the LCD.
(4) Press the **X** key to return the machine to the initial state of the maintenance mode.

Note:
If printing fails, the following error indications are displayed on the LCD, and printing is cancelled. To print again, refer to the measures in the table below and remove the cause of the error. Then, press the **Go** key for the model without a touch panel and the **Mono** key for the model with a touch panel. "PRINTING" is displayed on the LCD, and the frame pattern is printed on a single sheet.

Error message	Measure
Replace Toner	Replace the empty toner cartridge and press the **Go** key for the model without a touch panel and the **Mono** key for the model with a touch panel to clear the error.
Cover is Open	Close the front cover.
No Paper	Load paper into the paper tray, close the paper tray, and press the **Go** key for the model without a touch panel and the **Mono** key for the model with a touch panel to clear the error.
Jam Tray1	Remove the jammed paper, close the paper tray and all the covers, and press the **Go** key for the model without a touch panel and the **Mono** key for the model with a touch panel to clear the error.
Jam Rear	
Jam Duplex	
Duplex Disabled	Load paper into the paper tray, close the paper tray and all the covers, and press the **Go** key for the model without a touch panel and the **Mono** key for the model with a touch panel to clear the error.

■ Frame pattern

Fig. 5-14

1.3.20 Color test pattern (Function code 71)

<Function>

This function is used to print the pattern of each color and check if there is any dirty on or failure in the belt unit, developer roller, and exposure drum, etc.

<Operating procedure>

Model without touch panel

(1) Press the ▲ or ▼ key to display "MAINTENANCE 71" on the LCD in the initial state of the maintenance mode. Then, press the **OK** key. "2D3S YMCBWKW_A" is displayed on the LCD.
(2) Referring to the <Print pattern> table, press the ▲ or ▼ key to select the desired print pattern and press the **OK** key. When "2D3S YMCBWKW_A" is selected, "PRINTING" is displayed on the LCD and a test pattern printing is started. When a print pattern other than "2D3S YMCBWKWK_A" is selected, "SELECT: A4" is displayed on the LCD. (Following steps (3) to (6) described below, select an option in each item and perform test pattern printing.)
(3) Referring to the <Paper size> table, press the ▲ or ▼ key to select the desired paper size and press the **OK** key. "SELECT: PLAIN" is displayed on the LCD.
(4) Referring to the <Print specifications> table, press the ▲ or ▼ key to select the desired media specifications and press the **OK** key. "SELECT: SX" is displayed on the LCD.
(5) Referring to the <Print type> table, press the ▲ or ▼ key to select the desired print type and press the **OK** key. "SELECT: 1PAGE" is displayed on the LCD.
(6) Referring to the <Number of pages to be printed> table, press the ▲ or ▼ key to select the desired number of pages to be printed and press the **OK** key. "PRINTING" is displayed on the LCD and the test pattern starts to be printed under the selected items for paper feed test.
(7) When printing is finished, the screen returns to the print pattern display. To print the test pattern again, press the **OK** key.
(8) Press the **Cancel** key to return the machine to the initial state of the maintenance mode.

Model with touch panel

(1) Press the **7** and **1** keys in this order in the initial state of the maintenance mode. "2D3S YMCBWKW_A" is displayed on the LCD.
(2) Referring to the <Print pattern> table, press the ▲ or ▼ key to select the desired print pattern and press the **SET** key. When "2D3S YMCBWKW_A" is selected, "PRINTING" is displayed on the LCD and a test pattern printing is started. When a print pattern other than "2D3S YMCBWKWK_A" is selected, "SELECT: A4" is displayed on the LCD. (Following steps (3) to (6) described below, select an option in each item and perform test pattern printing.)
(3) Referring to the <Paper size> table, press the ▲ or ▼ key to select the desired paper size and press the **SET** key. "SELECT: PLAIN" is displayed on the LCD.
(4) Referring to the <Print specifications> table, press the ▲ or ▼ key to select the desired media specifications and press the **SET** key. "SELECT: SX" is displayed on the LCD.
(5) Referring to the <Print type> table, press the ▲ or ▼ key to select the desired print type and press the **SET** key. "SELECT: 1PAGE" is displayed on the LCD.
(6) Referring to the <Number of pages to be printed> table, press the ▲ or ▼ key to select the desired number of pages to be printed and press the **SET** key. "PRINTING" is displayed on the LCD and the test pattern starts to be printed under the selected items for paper feed test.
(7) When printing is finished, the screen returns to the print pattern display. To print the test pattern again, press the **Mono** key.
(8) Press the **X** key to return the machine to the initial state of the maintenance mode.

Note:
If printing fails, the error indications in the <Error message> table are displayed on the LCD and printing is cancelled. To print again, refer to the measures in the table and remove the cause of the error. Then, press the **Go** key for the model without a touch panel and the **Mono** key for the model with a touch panel. "PRINTING" is displayed on the LCD and the color test pattern is printed.

<Print pattern>

LCD	Description
2D3S YMCBWKW_A	Total seven sheets of one sheet for each color with full page print mode* + two blank sheets + data to check Banding
2D3S M	Magenta
2D3S K	Black
2D3S C	Cyan
2D3S Y	Yellow
2D3S MCYK	4-color horizontal band

* In the full page print mode, the cleaning operation is performed between printing of blank paper and Black.

<Paper size>

LCD	Description
SELECT: A4	A4-size
SELECT: LETTER	Letter-size
SELECT:ISOB5	ISO B5-size
SELECT:JISB5	JIS B5-size
SELECT:A5	A5-size
SELECT:A5L	A5L-size
SELECT:JISB6	JIS B6-size
SELECT:A6	A6-size
SELECT:EXECUTE	Executive-size
SELECT:LEGAL	Legal-size
SELECT:FOLIO	Folio-size
SELECT:HAGAKI	Postcard-size

<Print specifications>

LCD	Description
SELECT: PLAIN	Plain paper
SELECT: THICK	Thick paper
SELECT: THIN	Thin paper
SELECT:THICKER	Thicker paper
SELECT:RECYCLED	Recycled paper
SELECT:BOND	Bond paper
SELECT:LABEL	Label
SELECT:ENVELOPE	Envelopes
SELECT:ENVTHIN	Env. Thin
SELECT:ENVTHICK	Env. Thick
SELECT:GLOSSY	Glossy paper
SELECT:HAGAKI	Postcard

<Print type>

LCD	Description
SELECT:SX	One-sided printing from Paper tray 1
SELECT:DX	Two-sided printing from Paper tray 1

<Number of pages to be printed>

LCD	Description
SELECT: 1PAGE	One page printing
SELECT: CONTINUE	Continuous printing

<Error message>

LCD	Description
Replace Toner	Replace the empty toner cartridge and press the **Go** key for the model without a touch panel and the **Mono** key for the model with a touch panel to clear the error.
Cover is Open	Close the front cover.
No Paper	Load paper into the paper tray, close the paper tray, and press the **Go** key for the model without a touch panel and the **Mono** key for the model with a touch panel to clear the error.
Jam Tray1	Remove the jammed paper, close the paper tray and all the covers, and press the **Go** key for the model without a touch panel and the **Mono** key for the model with a touch panel to clear the error.
Jam Rear	

■ Color test pattern

2D3S YMCBWKW_A

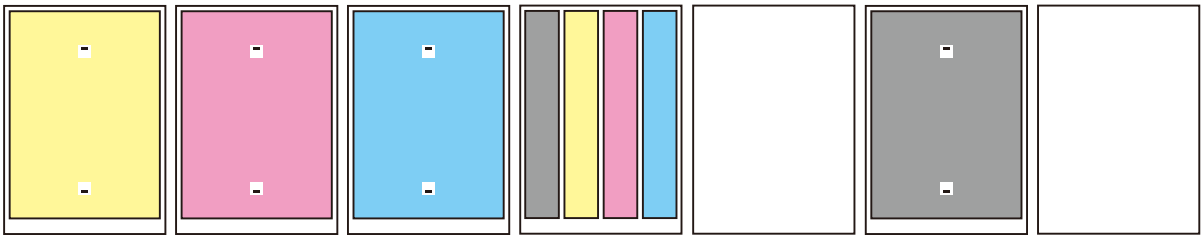

2D3S M　2D3S K　2D3S C　2D3S Y　2D3S MCYK

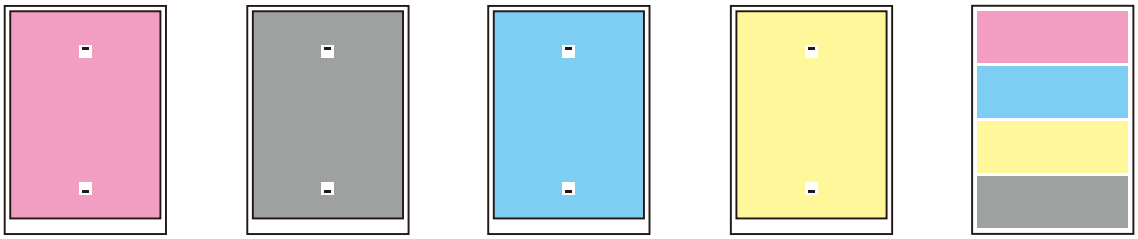

Fig. 5-15

Confidential

1.3.21 Sensitivity adjustment of density sensor (Function code 72)

<Function>

This function is used to print the patch data for density sensor sensitivity adjustment on the belt unit and measure the density with the density sensor. The characteristics of the density sensor are calculated based on the value measured by the density sensor, and the parameter for correcting developing bias voltage is adjusted.

<Operating procedure>

Model without touch panel

(1) Press the ▲ or ▼ key to display "MAINTENANCE 72" on the LCD in the initial state of the maintenance mode. Then, press the **OK** key. "PLS WAIT 72" is displayed on the LCD and performs the sensitivity adjustment of the density sensor.
(2) When this operation is completed without errors, the machine returns to the initial state of the maintenance mode.

Model with touch panel

(1) Press the **7** and **2** keys in this order in the initial state of the maintenance mode. "PLS WAIT 72" is displayed on the LCD and performs the sensitivity adjustment of the density sensor.
(2) When this operation is completed without errors, the machine returns to the initial state of the maintenance mode.

Note:
If the sensitivity adjustment of the density sensor fails, "ERROR 72" is displayed on the LCD. Display the error message by pressing the ▼ key, and take the following measure that corresponds to the error message.

Error message	Measure
dens_l_drk_err	- Reconnect the harness of the eject sensor PCB . - Replace the registration mark sensor unit. - Replace the main PCB ASSY.
belt_err	- Replace the belt unit. - Replace the waste toner box. - Replace the registration mark sensor unit. - Replace the main PCB ASSY.
dens_pat_err dens_calc_err	- Check if the toner cartridges are set in the correct order of colors. - Replace the toner cartridges and drum unit. - Replace the registration mark sensor unit. - Replace the main PCB ASSY.
dens_led_adj_err	- Replace the belt unit. - Replace the waste toner box. - Replace the registration mark sensor unit. - Replace the main PCB ASSY.
lph_calc_err	- Replace the toner cartridges and drum unit. - Securely close the front cover. - Wipe the scanner window of the laser unit with a soft lint-free cloth. - Re-assemble the laser unit.
TONER EMPTY # *	Replace the empty toner cartridge and press the **Go** key for the model without a touch panel and the **Mono** key for the model with a touch panel to clear the error. Perform the sensitivity adjustment of the density sensor again.
Cover is Open	Close the front cover.
Replace Toner	Replace the black toner cartridge and press the **Go** key for the model without a touch panel and the **Mono** key for the model with a touch panel to clear the error. Perform the sensitivity adjustment of the density sensor again.

* # indicates the toner color (Y, M, or C) of which cartridge became empty.

1.3.22 Continuous adjustments of density and registration sensor (Function code 73)

<Function>

This function is used to perform the following functions consecutively:
Sensitivity adjustment of density sensor (Function code 72), Developing bias voltage correction (Function code 83), and Adjustment of color registration (Adjustment of inter-color position alignment) including registration sensor calibration (Function code 66).

<Operating procedure>

Model without touch panel

(1) Press the ▲ or ▼ key to display "MAINTENANCE 73" on the LCD in the initial state of the maintenance mode. Then, press the **OK** key. "72/83/66-1" is displayed on the LCD.

(2) Press the **OK** key. "PLS WAIT 72" is displayed on the LCD and each adjustment is performed in the following order.

1) Sensitivity adjustment of density sensor (Function code 72)
LCD: PLS WAIT 72

2) Developing bias voltage correction (Function code 83)
LCD: PLS WAIT 83

3) Adjustment of color registration (Adjustment of inter-color position alignment) including registration sensor calibration (Function code 66)
LCD: PLS WAIT 66-1

(3) When all operations are completed, "COMP" is displayed on the LCD. Pressing the ▼ key and **Cancel** key in this order and the machine returns to the initial state of the maintenance mode.

Model with touch panel

(1) Press the **7** and **3** keys in this order in the initial state of the maintenance mode. "72/83/66-1" is displayed on the LCD.

(2) Press the **SET** key. "PLS WAIT 72" is displayed on the LCD and each adjustment is performed in the following order.

1) Sensitivity adjustment of density sensor (Function code 72)
LCD: PLS WAIT 72

2) Developing bias voltage correction (Function code 83)
LCD: PLS WAIT 83

3) Adjustment of color registration (Adjustment of inter-color position alignment) including registration sensor calibration (Function code 66)
LCD: PLS WAIT 66-1

(3) When all operations are completed, "COMP" is displayed on the LCD. Pressing the ▼ key and **X** key in this order and the machine returns to the initial state of the maintenance mode.

Note:
If each adjustment fails, "ERROR**" is displayed on the LCD and the adjustment is stopped. If you press the ▼ key with "ERROR**" displayed, the details of the error are shown. "**" in "ERROR **" displayed on the LCD indicates corresponding function code number. Make sure to take an appropriate measure after checking the measures provided in each function code.

1.3.23 Setting by country (Function code 74)

<Function>

This function is used to customize the machine according to language, function settings, and worker switch settings.

<Operating procedure>

Model without touch panel

(1) Press the ▲ or ▼ key to display "MAINTENANCE 74" on the LCD in the initial state of the maintenance mode. Then, press the **OK** key. The present spec code is displayed on the LCD. (The first digit is blinking.)

(2) When you press the **OK** key, the blinking cursor moves from the first digit to the second digit. (The first digit cannot be selected.)

(3) Press the ▲ key to enter "1" and press the ▼ key to enter "0" and press the **OK** key. When the second digit is entered, the blinking cursor moves to the fourth digit.

(4) When you press the ▲ or ▼ key, the third digit and the fourth digit are changed at the same time. Display the relevant numeric value on the LCD and press the **OK** key.

(5) When you press the **Go** key, the new setting is saved, and "PARAMETER INIT" is displayed on the LCD. After the setting is saved, the machine returns to the initial state of the maintenance mode.

Model with touch panel

(1) Press the **7** and **4** keys in this order in the initial state of the maintenance mode. The present spec code is displayed on the LCD.

(2) Enter the desired spec code (fourth digits).

(3) When you press the **Mono** key, the new setting is saved, and "PARAMETER INIT" is displayed on the LCD. After the setting is saved, the machine returns to the initial state of the maintenance mode.

Note:
If there is a pause of more than one minute, the machine will automatically return to the initial state of the maintenance mode.

<Spec code>

MODEL	Spec code	
HL-L8250CDN	Australia	0006
	CEE-General	0004
	China	0020
	France/Belgium/ Netherlands	0004
	Germany	0004
	Italy/Iberia	0004
	Korea	0006
	Pan-Nordic	0004
	Russia	0004
	Singapore	0006
	Switzerland	0004
	U.S.A	0001
	United Kingdom	0004
HL-L8350CDW	Argentina	0136
	Australia	0106
	Brazil	0142
	Canada	0102
	CEE-General	0104
	Chile	0136
	France/Belgium/ Netherlands	0104
	Germany	0104
	Gulf	0141
	Italy/Iberia	0104
	Korea	0106
	Pan-Nordic	0104
	Singapore	0106
	Switzerland	0104
	Turkey	0141
	Taiwan	0123
	U.S.A	0101
	United Kingdom	0104

MODEL	Spec code	
HL-L8350CDWT	U.S.A	0101
HL-L9200CDW	Australia	0006
	Canada	0002
	China	0020
	U.S.A	0001
HL-L9200CDWT	Canada	0002
	CEE-General	0004
	France/Belgium/ Netherlands	0004
	Germany	0004
	Italy/Iberia	0004
	Pan-Nordic	0004
	Russia	0004
	Switzerland	0004
	U.S.A	0001
	United Kingdom	0004

Note:

The above information is as of January 2014.
Please confirm the latest firmware information which is available from your local Brother Customer Service.

1.3.24 Printout of maintenance information (Function code 77)

<Function>

This function is used to print the maintenance information, such as the remaining amount of consumables, number of replacements, and counter values.

<Operating procedure>

Model without touch panel

(1) Press the ▲ or ▼ key to display "MAINTENANCE 77" on the LCD in the initial state of the maintenance mode. Then, press the **OK** key. Maintenance information starts to be printed.

(2) When printing is finished, the machine returns to the initial state of the maintenance mode.

Model with touch panel

(1) Press the **7** key twice in the initial state of the maintenance mode. Maintenance information starts to be printed.

(2) When printing is finished, the machine returns to the initial state of the maintenance mode.

■ Maintenance information

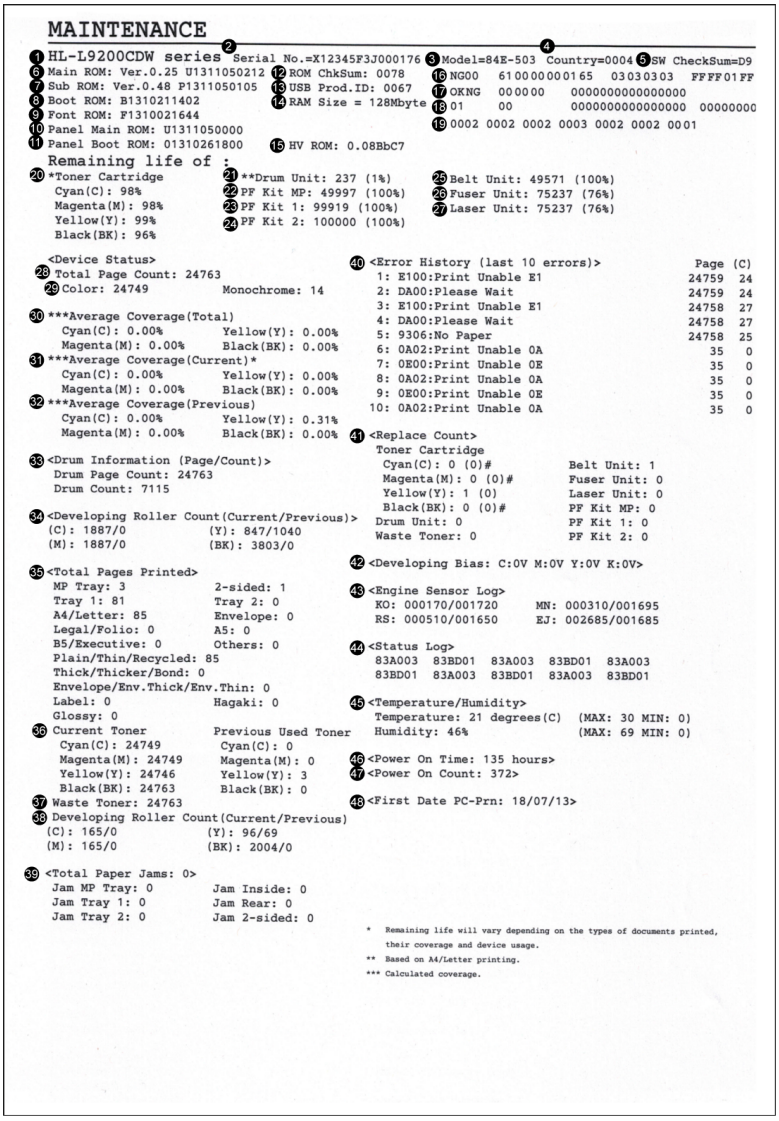

Fig. 5-16

1	Model name	25	Remaining life of belt unit
2	Serial number	26	Remaining life of fuser unit
3	Model code	27	Remaining life of laser unitt
4	Spec code	28	Total printed page
5	Switch checksum (factory use)	29	Total number of color pages printed/ Total number of monochrome pages printed
6	Main firmware version		
7	Sub firmware version	30	Accumulated average coverage
8	Boot firmware version	31	Average coverage (Current toner)
9	Demo firmware version	32	Average coverage (Previous used toner)
10	Panel firmware version	33	Drum page count/Rotations of the drum
11	Panel boot firmware version	34	Rotations of the developer roller (Current toner/Previous used toner)
12	ROM CheckSum		
13	USB ID code	35	Total printed pages per paper tray/ Paper size/Paper type
14	RAM size		
15	High-voltage firmware version	36	Total printed pages by each toner cartridge (Current toner/Previous used toner)
16	Function code 72 result/ Main PCB serial No. first digit/ Wireless LAN country setting/ Wireless LAN output value/ WLAN Setup history/ One Push Demo setting/ Production ID/ Toner type CMYK (Current)/ Toner type CMYK (Previously used)	37	Number of pages printed from the waste toner box
		38	Rotations of the developer roller used in printing (Current toner/Previous used toner)
		39	Total number of paper jams/ Paper jams that have occurred in each section in the machine
17	Main PCB inspection log/ High-voltage inspection log/ Number of electric discharge errors/ Number of fuser unit errors/ The number of polygon motor lock errors/Process execution state	40	Machine error log/Total pages printed by the time of error occurrence/Temperature and humidity at the time of error occurrence
		41	Number of times that consumables and periodical replacement parts have been replaced
18	Next Power On State/ The number of times of the power supply waveform detection error/ Process execution state/ Process execution checksum	42	Developing bias voltage value
		43	Engine sensor log (Not necessary for maintenance work)
19	Auto registration/ Developing bias voltage correction/ Gamma correction/ Auto registration (user)/ Developing bias voltage correction (user)/Gamma correction (user)/ Registration error/ Color calibration flag	44	Status log (Not necessary for maintenance work)
		45	Temperature and humidity under which Function code 77 is executed/Maximum and minimum temperature and humidity
20	Estimated remaining life of toner	46	Total hours of current conduction
21	Remaining life of drum unit	47	Number of times that the power is turned ON
22	Remaining life of PF kit MP		
23	Remaining life of PF kit 1	48	Date and time when the machine starts to be used
24	Remaining life of PF kit 2		

1.3.25 Operational check of fans (Function code 78)

<Function>

This function is used to check that each fan is operating normally. The rotation speed is changed among three settings: 100%, 50% and OFF.

LCD	Parts name	Description
F	Fuser fan	Evacuate hot air of the fuser unit.
P	Power fan	Evacuate hot air of the low-voltage power supply PCB unit.
B	Blower	Intake air to prevent a dirt on the corona wire.

<Operating procedure>

Model without touch panel

(1) Press the ▲ or ▼ key to display "MAINTENANCE 78" on the LCD in the initial state of the maintenance mode. Then, press the **OK** key. "F100 P100 B100" is displayed on the LCD, and all the fans operate at the rotating speed of 100%.

(2) Press the **Go** key. "F50 P 0 B 0" is displayed on the LCD, and the fuser fan only operates at the rotating speed of 50%.

(3) Press the **Go** key. "F0 P 0 B 0" is displayed on the LCD, and all the fans stop.

(4) Press the **Cancel** key to return the machine to the initial state of the maintenance mode.

Model with touch panel

(1) Press the **7** and **8** keys in this order in the initial state of the maintenance mode. "F100 P100 B100" is displayed on the LCD, and all the fans operate at the rotating speed of 100%.

(2) Press the **Mono** key. "F50 P 0 B 0" is displayed on the LCD, and the fuser fan only operates at the rotating speed of 50%.

(3) Press the **Mono** key. "F0 P 0 B 0" is displayed on the LCD, and all the fans stop.

(4) Press the **X** key to return the machine to the initial state of the maintenance mode.

■ Location of fans

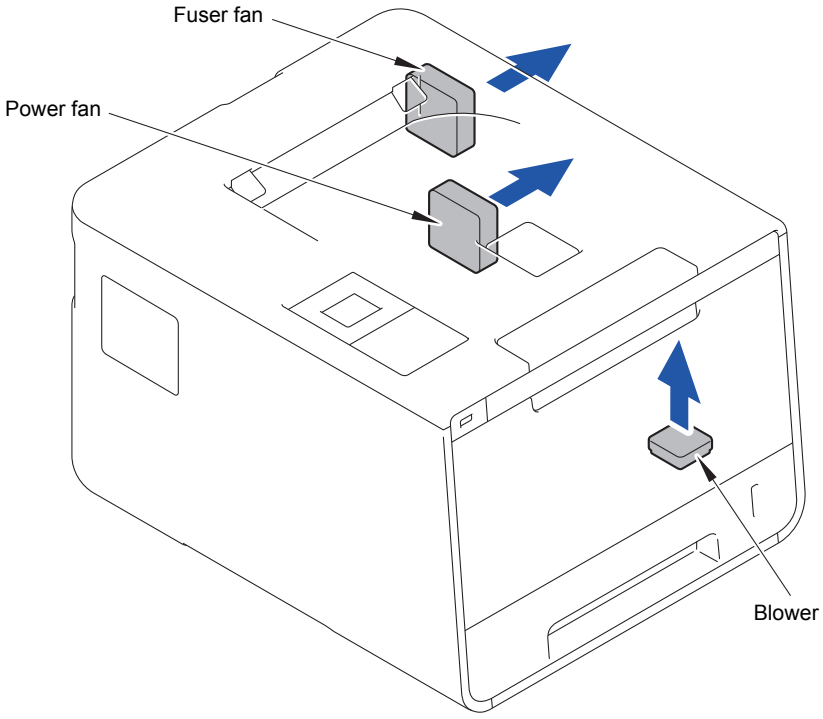

Fig. 5-17

Confidential

1.3.26 Display of device log information (Function code 80)

<Function>

This function is used to display the log information on the LCD.

<Operating procedure>

Model without touch panel

(1) Press the ▲ or ▼ key to display "MAINTENANCE 80" on the LCD in the initial state of the maintenance mode. Then, press the **OK** key. "MACERR_01:****" is displayed on the LCD.

(2) Each time you press the **Go** key, a different item is displayed. Press the **Back** key to go back to the previous item.

(3) Press the **Cancel** key to return the machine to the initial state of the maintenance mode.

Model with touch panel

(1) Press the **8** and **0** keys in this order in the initial state of the maintenance mode. "MACERR_01:****" is displayed on the LCD.

(2) Each time you press the **Mono** key, a different item is displayed. Press the < key to go back to the previous item.

(3) Press the **X** key to return the machine to the initial state of the maintenance mode.

■ Maintenance information

LCD	Description
MACERR_##:0000	Machine error history (Past 10 error history) *1
USB:000G8J000166	Serial number*2
MAC:008077112233	MAC address
PCB:911309123456	Main PCB serial number
CTN_ERM:78%	Amount of remaining cyan toner estimated from coverage
CTN_RRM:67%	Amount of remaining cyan toner estimated from the number of developer rotations
MTN_ERM:78%	Amount of remaining magenta toner estimated from coverage
MTN_RRM:67%	Amount of remaining magenta toner estimated from the number of developer rotations
YTN_ERM:78%	Amount of remaining yellow toner estimated from coverage
YTN_RRM:67%	Amount of remaining yellow toner estimated from the number of developer rotations
KTN_ERM:87%	Amount of remaining black toner estimated from coverage
KTN_RRM:67%	Amount of remaining black toner estimated from the number of developer rotations
DRUM_PG:00000000	Number of pages printed on drum unit
PFMP_PG:00000000	Number of pages where PF kit MP has been used
PFK1_PG:00000000	Number of pages where PF kit 1 has been used
PFK2_PG:00000000	Number of pages where PF kit 2 has been used
FUSR_PG:00000000	Number of pages printed on fuser unit
LASR_PG:00000000	Number of pages printed on laser unit
BELT_PG:00000000	Number of pages printed on belt unit
TTL_PG:00000000	Total number of pages printed
TTL_CO:00000000	Total number of color pages printed
TTL_MO:00000000	Total number of monochrome pages printed
CCVRGUSI:4.32%	Average coverage of cyan toner cartridge in use

LCD	Description
CCVRGACC:3.47%	Accumulated average coverage of cyan toner cartridge
MCVRGUSI:4.32%	Average coverage of magenta toner cartridge in use
MCVRGACC:3.47%	Accumulated average coverage of magenta toner cartridge
YCVRGUSI:4.32%	Average coverage of yellow toner cartridge in use
YCVRGACC:3.47%	Accumulated average coverage of yellow toner cartridge
KCVRGUSI:4.32%	Average coverage of black toner cartridge in use
KCVRGACC:3.47%	Accumulated average coverage of black toner cartridge
DRUM:00000000	Number of drum rotations
CTN_RND: 00000000	Number of cyan developer roller rotations
MTN_RND: 00000000	Number of magenta developer roller rotations
YTN_RND: 00000000	Number of yellow developer roller rotations
KTN_RND: 00000000	Number of black developer roller rotations
MP_PG:00000000	Number of pages picked up from the MP tray
TR1_PG:00000000	Number of pages picked up from the paper tray 1
DX_PG:00000000	Number of pages picked up from the duplex tray
TR2_PG:00000000	Number of pages picked up from the T2 paper tray unit
A4+LTR:00000000	Total number of paper input of A4 and Letter size paper
LG+FOL:00000000	Total number of paper input of Legal and Folio size paper
B5+EXE:00000000	Total number of paper input of B5 and Executive size paper
ENVLOP:00000000	Number of paper input of Envelope size
A5 :00000000	Number of paper input of A5 size (including A5 Long Edge) paper
OTHER :00000000	Number of paper input of other-size paper
PLTNRE:00000000	Total of pages printed on plain, thin, and recycled paper
TKTRBD:00000000	Total of pages printed on thick, thicker paper and bond paper
ENVTYP:00000000	Total of pages printed on envelopes, envelopes (thick), and envelopes (thin)
LABEL:00000000	Number of pages printed on label
HAGAKI:00000000	Number of pages printed on post card
GLOSSY:00000000	Number of pages printed on glossy paper
TTL_JAM:00000000	Total of jammed sheets
MP_JAM:00000	Number of sheets jammed in the MP tray
TR1_JAM:00000000	Number of sheets jammed in the Paper tray 1
IN_JAM:00000000	Number of sheets jammed inside the machine
RE_JAM:00000000	Number of sheets jammed near the paper eject ASSY back cover
DX_JAM:00000000	Number of sheets jammed in the duplex tray
TR2_JAM:00000	Number of sheets jammed in the T2 paper tray unit
POWER:00000375	Total hours of current conduction (Unit: H)
PWRCNT:00000001	Number of times that the power is turned ON
CTN_CH:0000	Number of times that the cyan toner cartridge has been replaced
MTN_CH:0000	Number of times that the magenta toner cartridge has been replaced

LCD	Description
YTN_CH:0000	Number of times that the yellow toner cartridge has been replaced
KTN_CH:0000	Number of times that the black toner cartridge has been replaced
DRUM_CH:0000	Number of times that the drum unit has been replaced
WTNR_CH:0000	Number of times that the waste toner box has been replaced
BELT_CH:0000	Number of times that the belt unit has been replaced
FUSR_CH:0000	Number of times that the fuser unit has been replaced
LASR_CH:0000	Number of times that the laser unit has been replaced
PFMP_CH:000	Number of times that the PF kit MP has been replaced
PFK1_CH:0000	Number of times that the PF kit 1 has been replaced
PFK2_CH:000	Number of times that the PF kit 2 has been replaced
CTN_PG1:00000000	Number of pages printed from the currently installed cyan toner cartridge
CTN_PG2:00000000	Number of pages printed from the previous installed cyan toner cartridge
MTN_PG1:00000000	Number of pages printed from the currently installed magenta toner cartridge
MTN_PG2:00000000	Number of pages printed from the previous installed magenta toner cartridge
YTN_PG1:00000000	Number of pages printed from the currently installed yellow toner cartridge
YTN_PG2:00000000	Number of pages printed from the previous installed yellow toner cartridge
KTN_PG1:00000000	Number of pages printed from the currently installed black toner cartridge
KTN_PG2:00000000	Number of pages printed from the previous installed black toner cartridge
WTNR_PG:00000000	Number of pages printed from the waste toner box
CDEV_BIAS:400V	Cyan developing bias voltage
MDEV_BIAS:400V	Magenta developing bias voltage
YDEV_BIAS:400V	Yellow developing bias voltage
KDEV_BIAS:400V	Black developing bias voltage
ENGERR##:000000	Engine error history (Past 10 error history) *3
HODN_ER:0000	Number of times that the electric discharge error occurs
FUSR_ER:0000	Number of times that the fuser unit error occurs
MTLK_ER:0000	Number of times that the polygon motor lock error of the laser unit occurs
BCLN:00000000	Number of belt cleaner roller rotations
DEVSTATUS__##:00	Log for design analysis *4

*1 01 to 10 are entered in ## in chronological order. When you press the **OK** key for the model without a touch panel and the **SET** key for the model with a touch panel as the machine error history is displayed, “PGCNT:00000000” (the page counter when the error occurred) is displayed on the LCD. When you press the **OK** key or the **SET** key once more, “TMP:000 HUM:000” (the temperature and humidity when the error occurred) is displayed on the LCD.

*2 The serial number can be changed according to the steps below.

Model without touch panel

1) Press the ▲ or ▼ key while the serial number is displayed on the LCD to display “9” on the LCD, and press the **OK** key. The serial number is displayed on the LCD again.
2) Then, press the ▲ or ▼ key to enter **4**, **7**, and **5** keys in this order. The first digit of the serial number displayed on the LCD starts blinking, and the machine enters the edit mode.
3) Press the ▲ or ▼ key to display the first digit of the serial number on the LCD using the ten-key pad and press the **OK** key. The blinking cursor moves to the second digit. Similarly, repeat the entering of the serial numbers of the 2nd to the last 15th digit.
4) When you press the **Go** key, the serial number is written and the machine returns to the initial state of the maintenance mode.

Model with touch panel

1) Press the **9**, **4**, **7**, and **5** keys in this order while the serial number is displayed. The first digit of the serial number displayed on the LCD starts blinking, and the machine enters the edit mode.
2) Enter the number of the first digit of the serial number using the ten-key pad. The blinking cursor moves to the second digit. Similarly, repeat the entering of the serial numbers of the 2nd to the last 15th digit.

<How to enter alphabets>
To enter alphabets other than A, B, C, D, E, and F, keep pressing a corresponding key in the ten-key pad based on the table given below until the alphabet you want to enter is displayed.

Ten-key pad	Corresponding alphabet
4	4→G→H→I
5	5→J→K→L
6	6→M→N→O
7	7→P→Q→R→S
8	8→T→U→V
9	9→W→X→Y→Z

3) When you press the **SET** key, the serial number is written and the machine returns to the initial state of the maintenance mode.

*3 01 to 10 are entered in ## in chronological order. When you press the **OK** key for the model without a touch panel and the **SET** key for the model with a touch panel as the engine error history is displayed, “TM:00000 BT:000” (TM: elapsed time (minute) from the previous error and BT: the number of times when the power is ON/OFF) is displayed on the LCD.

*4 01 to 10 are entered in ## in chronological order. When you press the **OK** key for the model without a touch panel and the **SET** key for the model with a touch panel as the log for design analysis is displayed, “PGCNT:00000000” (the page count when the error occurred) is displayed on the LCD.

1.3.27 Display of device error codes (Function code 82)

<Function>

This function is used to display the latest error code on the LCD.

<Operating procedure>

Model without touch panel

(1) Press the ▲ or ▼ key to display "MAINTENANCE 82" on the LCD in the initial state of the maintenance mode. Then, press the **OK** key. "MACHINE ERR XXXX" is displayed on the LCD.

(2) Press the **Cancel** key to return the machine to the initial state of the maintenance mode.

Model with touch panel

(1) Press the **8** and **2** keys in this order in the initial state of the maintenance mode. "MACHINE ERR XXXX" is displayed on the LCD.

(2) Press the **X** key to return the machine to the initial state of the maintenance mode.

Confidential

1.3.28 Developing bias voltage correction (Function code 83)

<Function>

This function performs developing bias voltage correction to fix the density of each color toner when printed color is not correct.

Note:
Before this function is performed, there is a need that the "1.3.21 Sensitivity adjustment of density sensor (Function code 72)" in this chapter has been done more than once. When performing this maintenance mode 83 after replacing the main PCB ASSY, make sure to perform the "1.3.21 Sensitivity adjustment of density sensor (Function code 72)" first.

<Operating procedure>

Model without touch panel

(1) Press the ▲ or ▼ key to display "MAINTENANCE 83" on the LCD in the initial state of the maintenance mode. Then, press the **OK** key. The machine displays "PLS WAIT 83" on the LCD and starts the developing bias voltage correction.

(2) When developing bias voltage correction is completed, "MODE KYMC ****" is displayed on the LCD. When you press the **Go** key, the machine returns to the initial state of the maintenance mode.
(* represents any number from 0 to 3.)

Model with touch panel

(1) Press the **8** and **3** keys in this order in the initial state of the maintenance mode. The machine displays "PLS WAIT 83" on the LCD and starts the developing bias voltage correction.

(2) When developing bias voltage correction is completed, "MODE KYMC ****" is displayed on the LCD. When you press the **Mono** key, the machine returns to the initial state of the maintenance mode.
(* represents any number from 0 to 3.)

Note:
If developing bias voltage correction fails, "ERROR 83" is displayed on the LCD. Display the error message by pressing the ▼ key, and take the following measure that corresponds to the error message.

Error message	Measure
FAILED DEVBIAS	Remove the error factors with the following operations and press the **Go** key for the model without a touch panel and the **Mono** key for the model with a touch panel to clear the error. - Re-insert the toner cartridge in the correct position. - Replace the toner cartridge. - Replace the drum unit. - Replace the waste toner box. - Replace the belt unit. - Replace the registration mark sensor unit.
TONER EMPTY # *	Replace the empty toner cartridge and press the **Go** key for the model without a touch panel and the **Mono** key for the model with a touch panel to clear the error. After the sensitivity adjustment of the density sensor (Function code 72) is performed, the developing bias voltage value is compensated again.
Cover is Open	Close the front cover.
Replace Toner	Replace the black toner cartridge and press the **Go** key for the model without a touch panel and the **Mono** key for the model with a touch panel to clear the error. After the sensitivity adjustment of the density sensor (Function code 72) is performed, the developing bias voltage value is compensated again.

* # indicates the toner color (Y, M, or C) of which cartridge became empty.

1.3.29 Reset counters for parts (Function code 88)

<Function>

After replacing a fuser unit, PF kit 1, 2, MP, laser unit, or low-voltage power supply PCB unit, perform this function to increase the replacement count by one and reset the count to clear the "Replace ***" warning.

<Operating procedure>

Model without touch panel

(1) Press the ▲ or ▼ key to display "MAINTENANCE 88" on the LCD in the initial state of the maintenance mode. Then, press the **OK** key. "Reset-Laser Unit" is displayed on the LCD.
(2) Press the ▲ or ▼ key to display the part of which counter you want to reset and press the **OK** key.
(3) Then "*******OK?" is displayed on the LCD. When you press the **Go** key, the counter of the selected part is reset, and the machine returns to step (2) again. (******* represents the selected part name.)
(4) Press the **Cancel** key to return the machine to the initial state of the maintenance mode.

Model with touch panel

(1) Press the **8** key twice in the initial state of the maintenance mode. "Reset-Laser Unit" is displayed on the LCD.
(2) Press the ▲ or ▼ key to display the part of which counter you want to reset and press the **Mono** key.
(3) Then "*******OK?" is displayed on the LCD. When you press the **Mono** key, the counter of the selected part is reset, and the machine returns to step (2) again. (******* represents the selected part name.)
(4) Press the **X** key to return the machine to the initial state of the maintenance mode.

The parts that can be selected are shown in the table below.

LCD	Part name
Reset-Laser Unit	Laser unit
Reset-Fuser Unit	Fuser unit
Reset-PF Kit T1	PF kit 1
Reset-PF Kit T2	PF kit 2
Reset-PF Kit MP	PF kit MP
Reset-LVPS	Low-voltage power supply PCB unit

1.3.30 Exit from the maintenance mode (Function code 99)

<Function>

This function is used to exit from the maintenance mode, restart the machine, and return to the ready state. If the error related to the fuser unit occurs, the error is cleared.

<Operating procedure>

Model without touch panel

(1) Press the ▲ or ▼ key to display "MAINTENANCE 99" on the LCD in the initial state of the maintenance mode. Then, press the **OK** key. The machine exits from the maintenance mode and return to the ready state.

Model with touch panel

(1) Press the **9** key twice in the initial state of the maintenance mode. The machine exits from the maintenance mode and return to the ready state.

2. OTHER SERVICE FUNCTIONS

2.1 Toner Manual Reset Function

<Function>

This function is to manually perform the same operation as the one when a toner cartridge is replaced with a new one. The purpose of this function is to provide a means to resolve an error when a new toner cartridge cannot be recognized by the machine, and the toner life display fails to be cleared.

<Operating procedure>

Model without touch panel

(1) Open the front cover and press the **Cancel** and **Secure** key at the same time in the ready state. “Reset Menu / K.TNR-STD” is displayed on the LCD.

(2) Press the ▲ or ▼ key to display the toner type of which counter you want to reset and press the **OK** key.

(3) “ ▲ Reset ▼ Exit” is displayed on the LCD and press the ▲ key.

(4) “Accepted” is displayed on the LCD. The selected toner type is reset, and the machine returns to the ready state.

Model with touch panel

(1) Open the front cover and hold down the ∨ key for 5 seconds or more in the ready state. “Reset Menu” is displayed on the LCD.

(2) Press the ∧ or ∨ key to select the toner type to reset.

(3) “Reset?” is displayed on the LCD and press the **Yes** key.

(4) “Accepted” is displayed on the LCD, the selected toner type is reset, and the machine goes back to the screen to select a toner type in step (2) again.

(5) Press the **X** key to return the machine to the ready state.

The toner type that can be selected are shown in the table below.

LCD	Part name	LCD	Part name
K.TNR-STD	Standard toner (Black)	M.TNR-STD	Standard toner (Magenta)
K.TNR-HC	High capacity toner (Black)	M.TNR-HC	High capacity toner (Magenta)
K.TNR-S.HC	Super high capacity toner (Black)	M.TNR-S.HC	Super high capacity toner (Magenta)
C.TNR-STD	Standard toner (Cyan)	Y.TNR-STD	Standard toner (Yellow)
C.TNR-HC	High capacity toner (Cyan)	Y.TNR-HC	High capacity toner (Yellow)
C.TNR-S.HC	Super high capacity toner (Cyan)	Y.TNR-S.HC	Super high capacity toner (Yellow)

2.2 Drum Cleaning

<Function>

This function is to attach a special cleaning sheet on the drum unit and perform the cleaning of the drum.

<Operating procedure>

Model without touch panel

(1) Press the **Cancel** key and ▲ key at the same time in the ready state. “Drum Cleaning / Attach the cleaning sheet. Please refer to the included instructions.” is displayed on the LCD.

(2) Open the front cover, take out the drum unit, and attach the cleaning sheet on the drum unit. (For the method of attaching the cleaning sheet, refer to the insertion of the cleaning sheet.)

(3) Put the drum unit back in the machine and close the front cover. “Drum Cleaning/ Please wait” is displayed on the LCD, and then drum cleaning starts.

(4) When drum cleaning is completed, “Drum Cleaning/ Drum Cleaning completed. Remove the cleaning sheet.” is displayed on the LCD. Then, open the front cover, take out the drum unit, and remove the cleaning sheet from the drum unit.

Note:
Open the front cover slightly, not fully, and then close it again. “Please Wait” is displayed on the LCD and also the toner level is displayed on the LCD.

(5) Put the drum unit back in the machine and close the front cover. Then the machine returns to the ready state.

Model with touch panel

(1) Press the **Settings** key in the ready state.

(2) Press the ∧ or ∨ key to display “Machine Information” and then press the **Machine Information** key.

(3) Press the ∧ or ∨ key to display “Parts Life” and then press the **Parts Life** key.

(4) Press the ∧ or ∨ key to display “Drum Life” and then press the **Drum Life** key.

(5) Hold down the ∨ key for 5 seconds or more. “Attach the cleaning sheet. Please refer to the included instructions.” is displayed on the LCD.

(6) Open the front cover, take out the drum unit, and attach the cleaning sheet on the drum unit. (For the method of attaching the cleaning sheet, refer to the insertion of the cleaning sheet.)

(7) Put the drum unit back in the machine and close the front cover. “Please wait” is displayed on the LCD, and then drum cleaning starts.

(8) When drum cleaning is completed, “Drum Cleaning completed. Remove the cleaning sheet.” is displayed on the LCD. Then, open the front cover, take out the drum unit, and remove the cleaning sheet from the drum unit.

(9) Put the drum unit back in the machine and close the front cover. Then the machine returns to the ready state.

2.3 Counter Reset of Consumable Parts (Drum Unit/Belt Unit)

<Function>

After replacing a drum unit or belt unit, perform this function to increase the replacement count by one and reset the count to clear the “Replace ***” warning.

<Operating procedure>

Model without touch panel

(1) Press **GO** and ▲ at the same time. “Reset Menu” is displayed on the LCD.

(2) Press the ▲ or ▼ key to display the part of which counter you want to reset and press the **OK** key.

(3) “ ▲ Reset ▼ Exit” is displayed on the LCD and press the ▲ key. “Accepted” is displayed on the LCD and the counter of the selected part is reset.

Model with touch panel

(1) Press the **Settings** key in the ready state.

(2) Press the ∧ or ∨ key to display “Machine Information” and then press the **Machine Information** key.

(3) Press the ∧ or ∨ key to display “Parts Life” and then press the **Parts Life** key.

(4) Hold down the **X** key for 5 seconds or more. “Reset Menu” is displayed on the LCD.

(5) Press the key of the part of which counter you want to reset. “Reset *****?” is displayed on the LCD. (******* represents the selected part name.)

(6) Press the **Yes** key. “Accepted” is displayed on the LCD and the counter of the selected part is reset.

The consumable parts that can be selected are shown in the table below.

LCD	Part name
Drum	Drum unit
Belt Unit	Belt unit

Confidential

CHAPTER 6 WIRING DIAGRAM

1. WIRING DIAGRAM

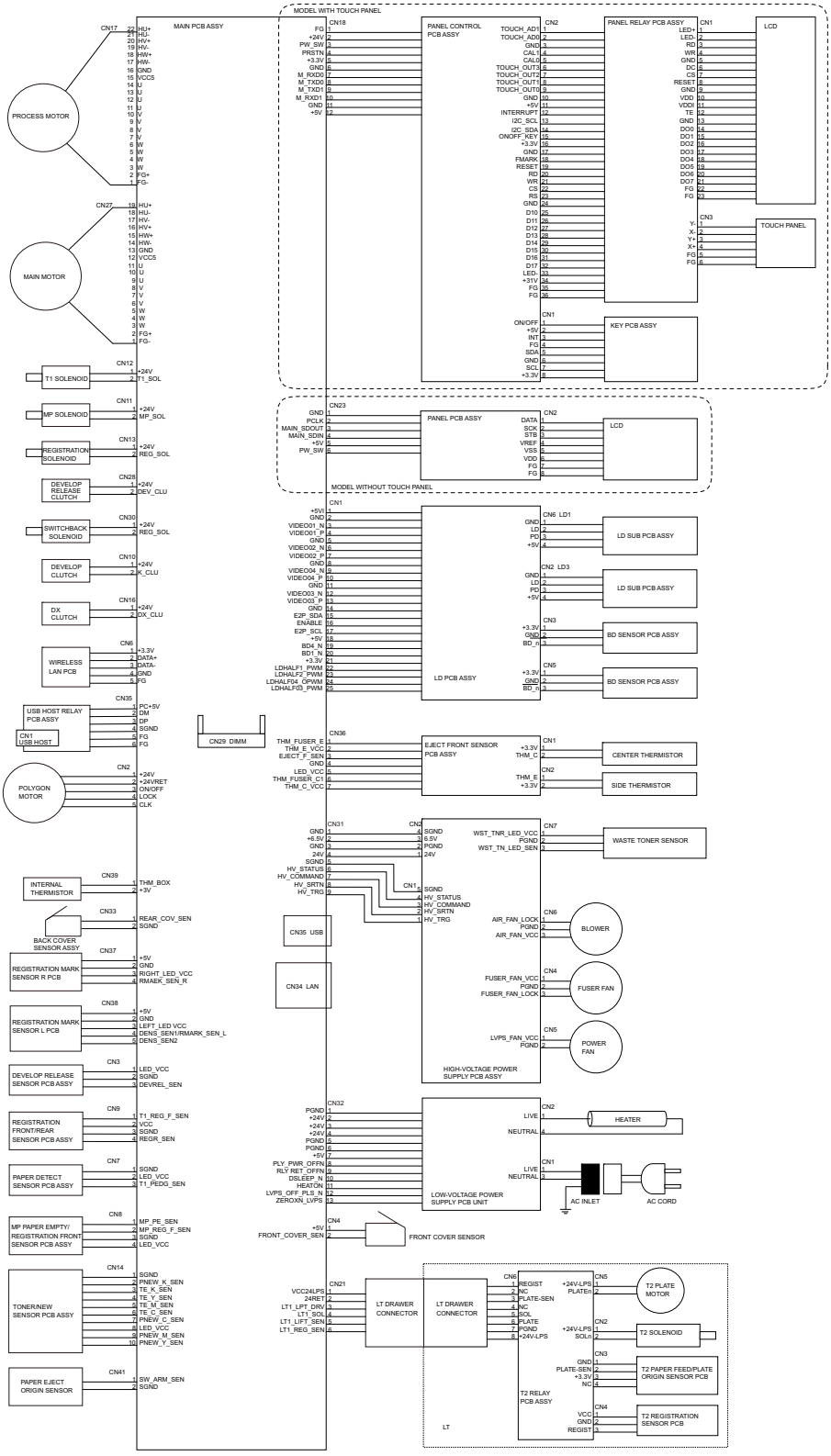

Confidential

CHAPTER 7 PERIODICAL MAINTENANCE

1. SAFETY PRECAUTIONS

To avoid creating secondary problems by mishandling, follow the warnings and precautions below during maintenance work.

WARNING

Some parts inside the machine are extremely hot immediately after the machine is used. When opening the front cover or back cover to access any parts inside the machine, never touch the shaded parts shown in the following figures.

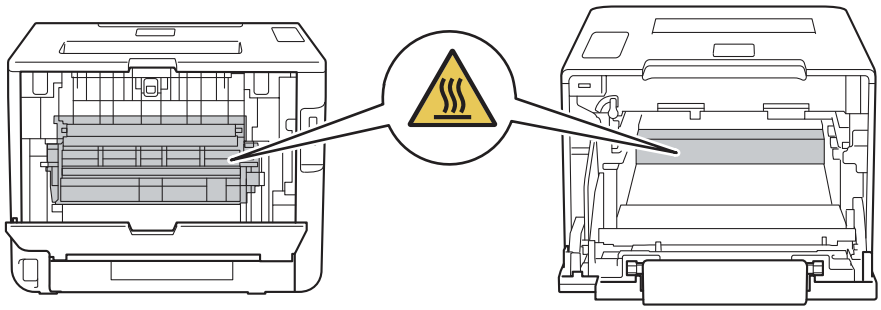

Note:

- Be careful not to lose screws, washers, or other parts removed.
- Be sure to apply grease to the gears and applicable positions specified in Chapter 3.
- When using soldering irons or other heat-generating tools, take care not to accidentally damage parts such as wires, PCBs and covers.
- Static electricity charged in your body may damage electronic parts. When transporting PCBs, be sure to wrap them in conductive sheets.
- When replacing the PCB and all the other related parts, put on a grounding wrist band and perform the job on a static mat. Also take care not to touch the conductor sections on the flat cables or on the wire harness.
- After disconnecting flat cables, check that each cable is not damaged at its end or short-circuited.
- When connecting flat cables, do not insert them at an angle. After insertion, check that the cables are not at an angle.
- When connecting or disconnecting harnesses, hold the connector body, not the cables. If the connector is locked, release it first.
- After a repair, check not only the repaired portion but also handling of harnesses. Also check that other related portions are functioning properly before operational checks.
- After an assembly, recommend the operation of “dielectric strength voltage check” and “continuity check”.
- There must be no damage in the insulation sheet.
- After a repair, update the firmware to the latest version.

2. PERIODICAL REPLACEMENT PARTS

2.1 Procedures to Replace Periodical Replacement Parts

■ Preparation

Prior to proceeding with the disassembly procedure,

(1) Unplug

- the AC cord,
- the USB cable, if connected, and
- the LAN cable, if connected.

(2) Remove the Paper tray.

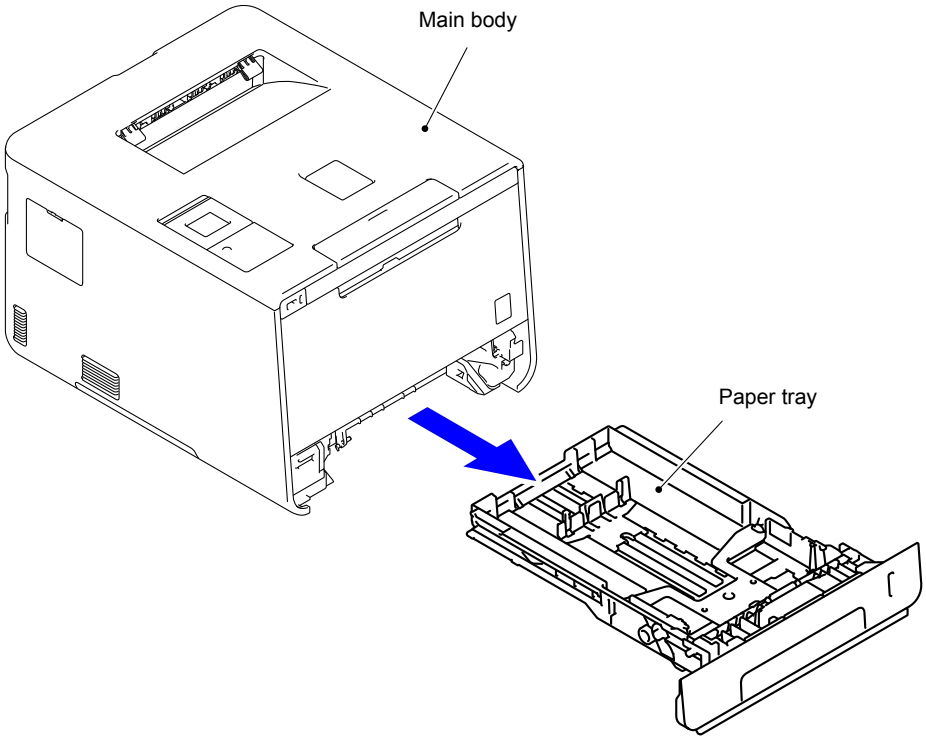

Confidential

2.1.1 Fuser unit

(1) Open the Back cover.

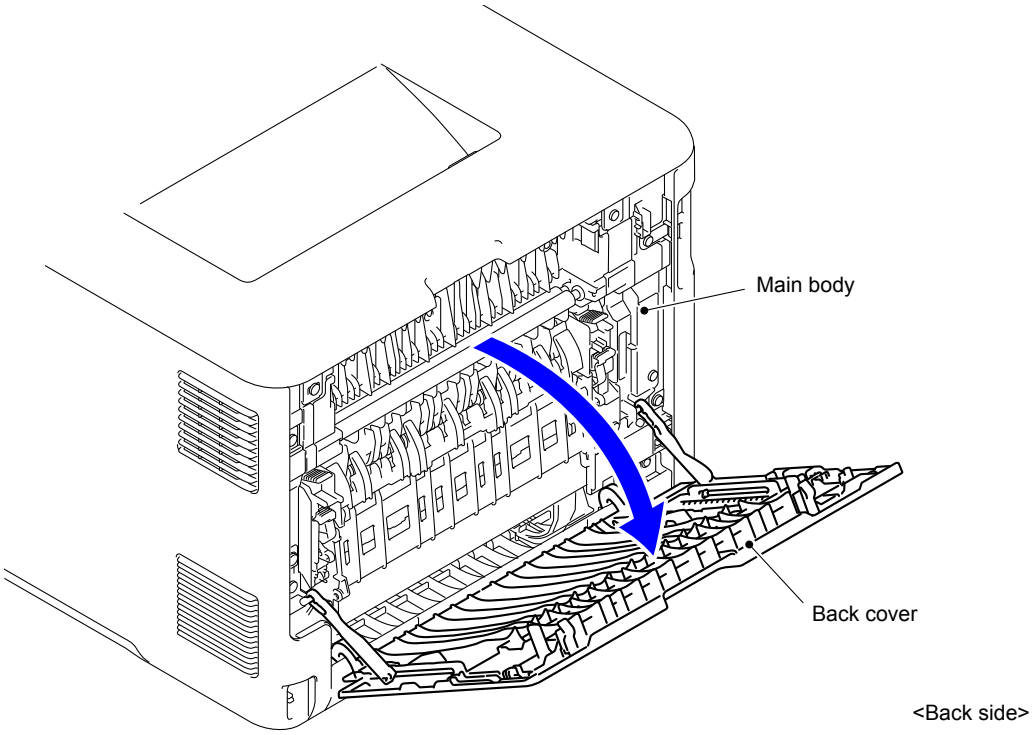

Fig. 7-1

(2) Remove the Back cover stopper arm L/R from the Main body.

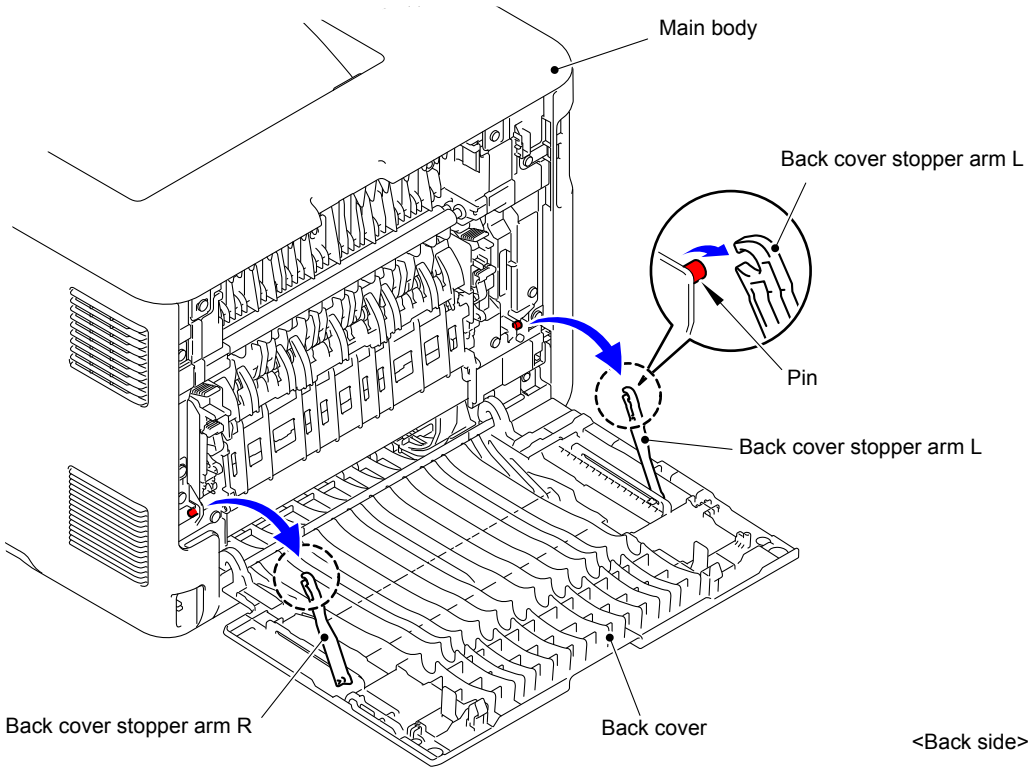

Fig. 7-2

(3) Remove the Shaft of the Back cover from the Bush on the right side of the Main body.

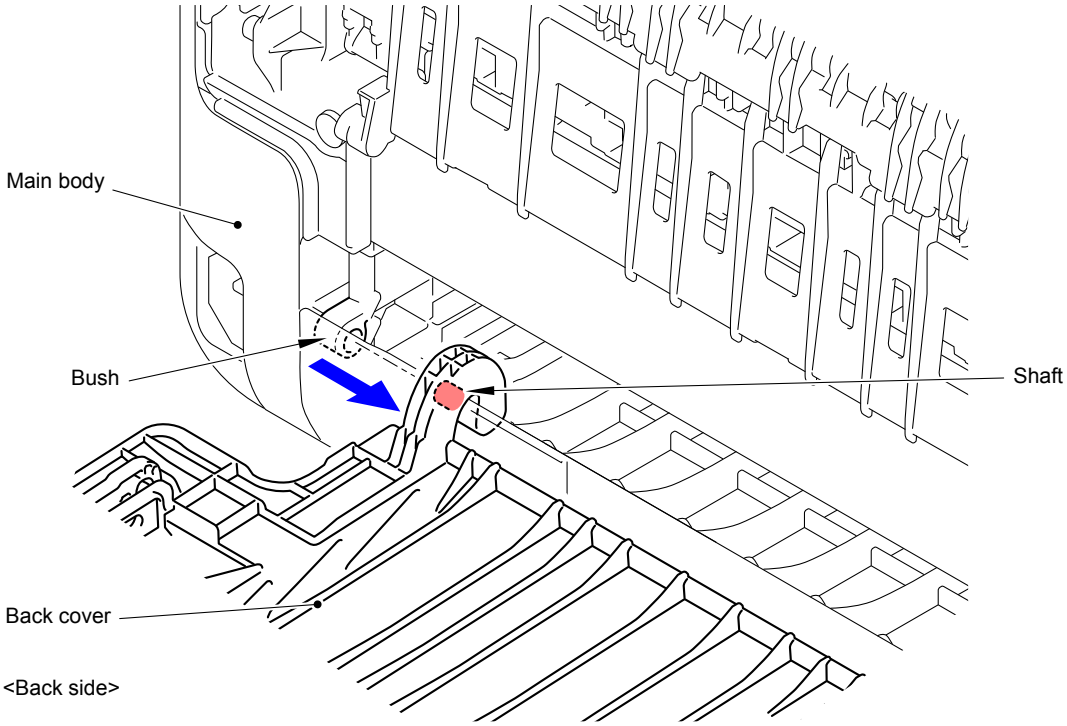

Fig. 7-3

(4) Remove the Back cover.

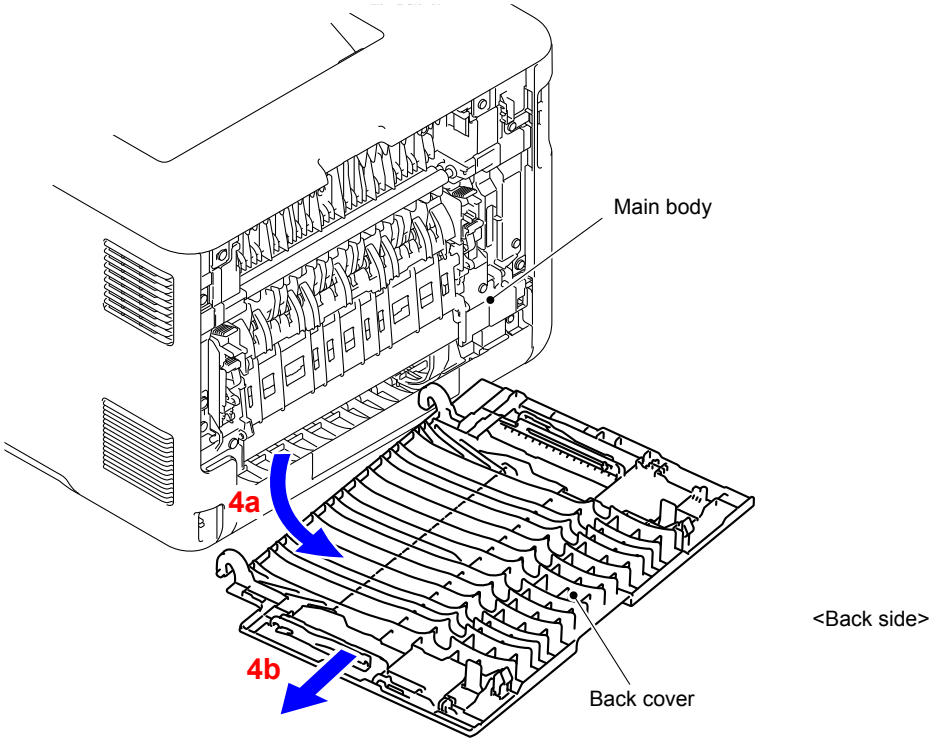

Fig. 7-4

(5) Open the Back flapper holder.
Release the two Pins and remove the Back flapper holder from the Main body.

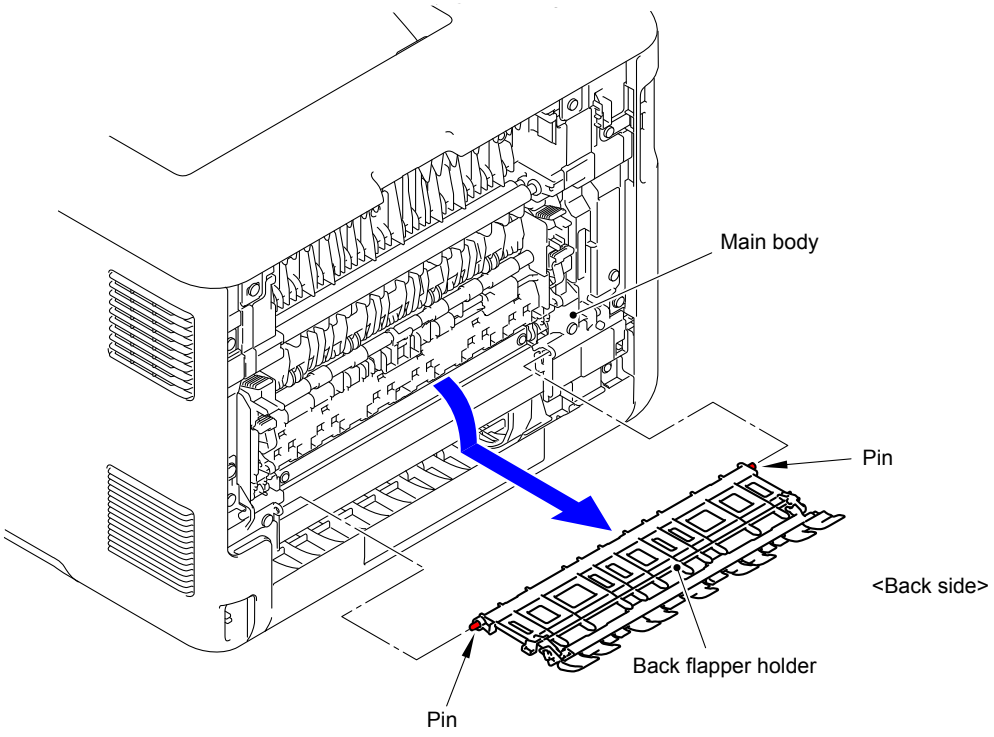

Fig. 7-5

(6) Remove the two Taptite bind B M4x12 screws from the Fuser cover L.
(7) Remove the one Hook and one Pin and remove the Fuser cover L from the Main body.

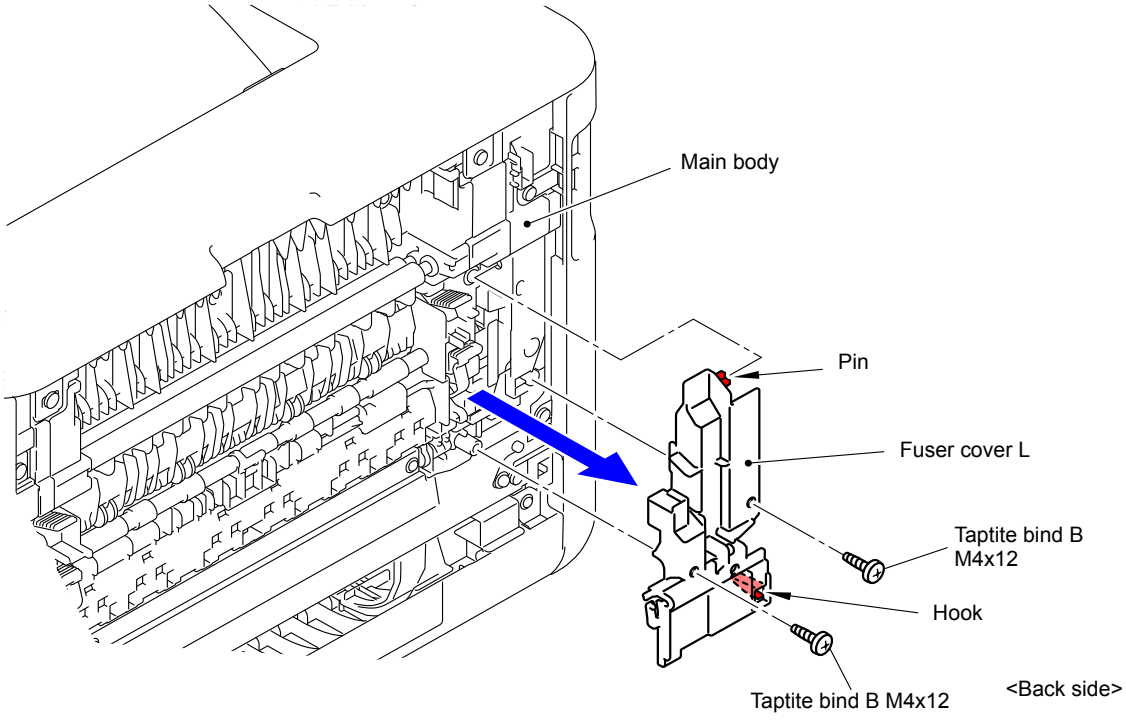

Fig. 7-6

(8) Release the lock of the Fuser cover lock lever L/R to open the Fuser cover ASSY.

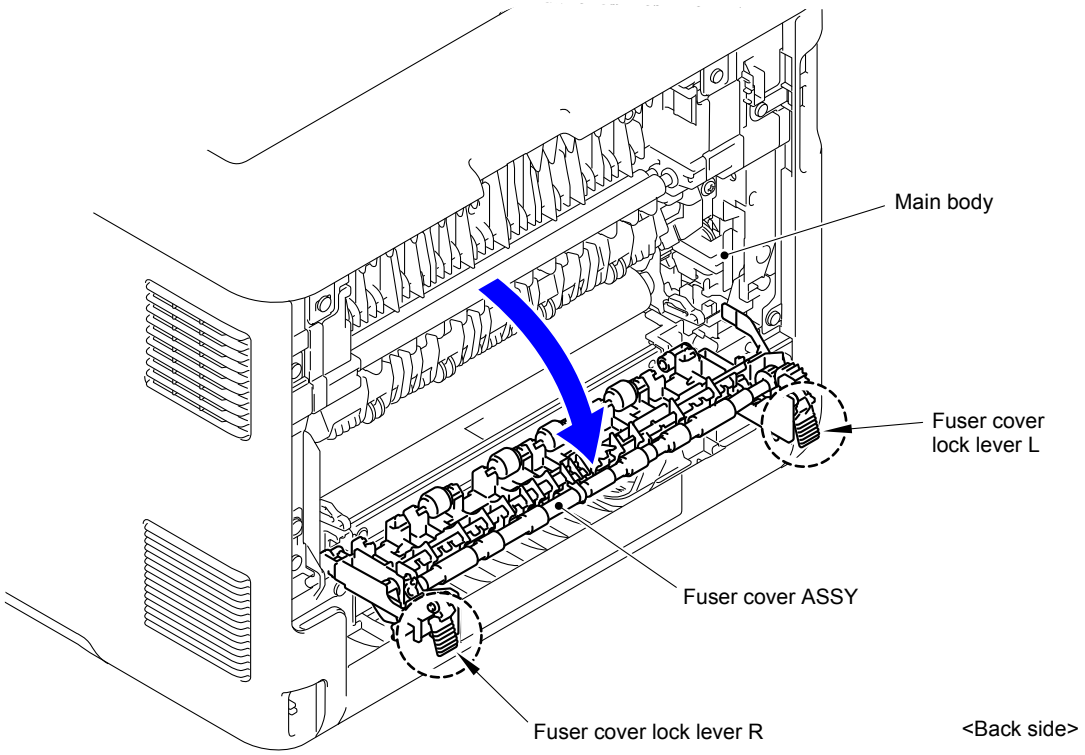

Fig. 7-7

(9) Slide the Fuser cover ASSY in the direction of the arrow 9a and remove it to the front.

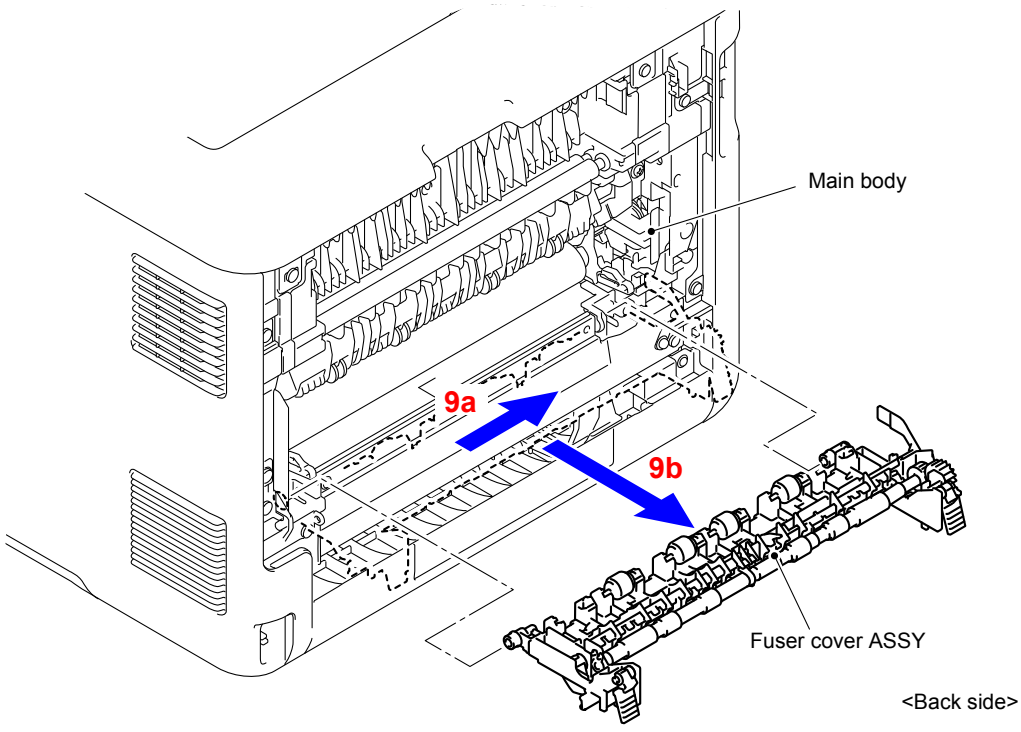

Fig. 7-8

Confidential

(10) Remove the Cleaner roller spring from the Hook of the Fuser cover ASSY.

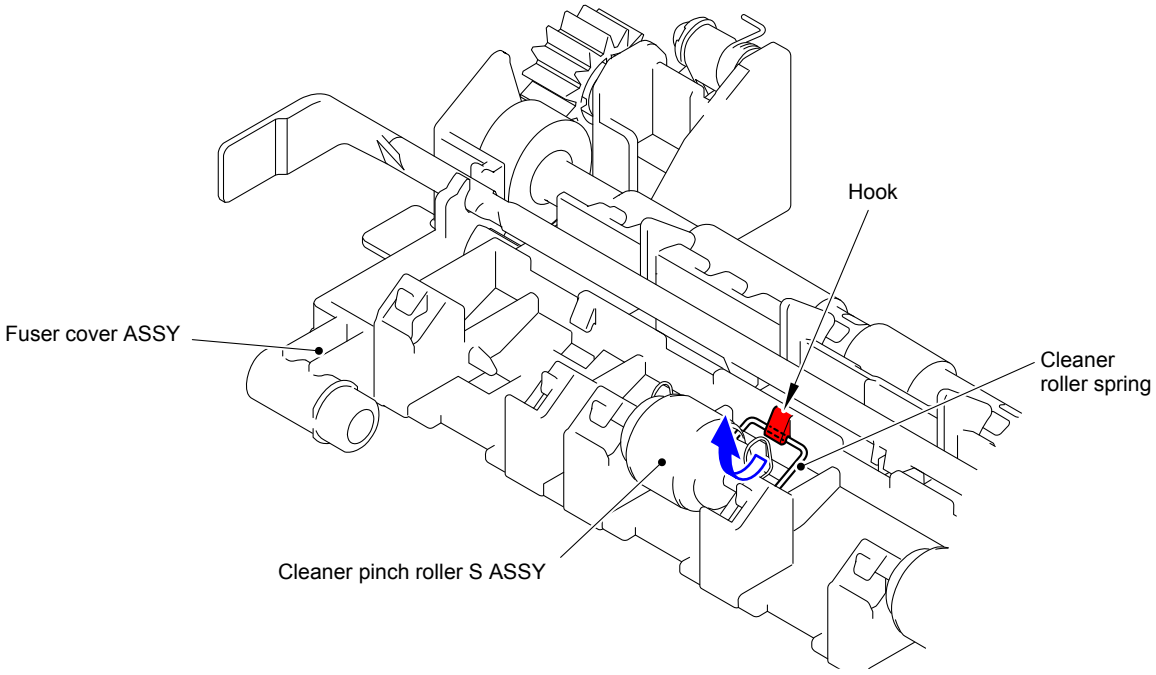

Fig. 7-9

(11) Remove the Cleaner roller spring from the two Pins of the Fuser cover ASSY.
Remove the Cleaner pinch roller S ASSY and Cleaner roller spring from the Fuser cover ASSY.

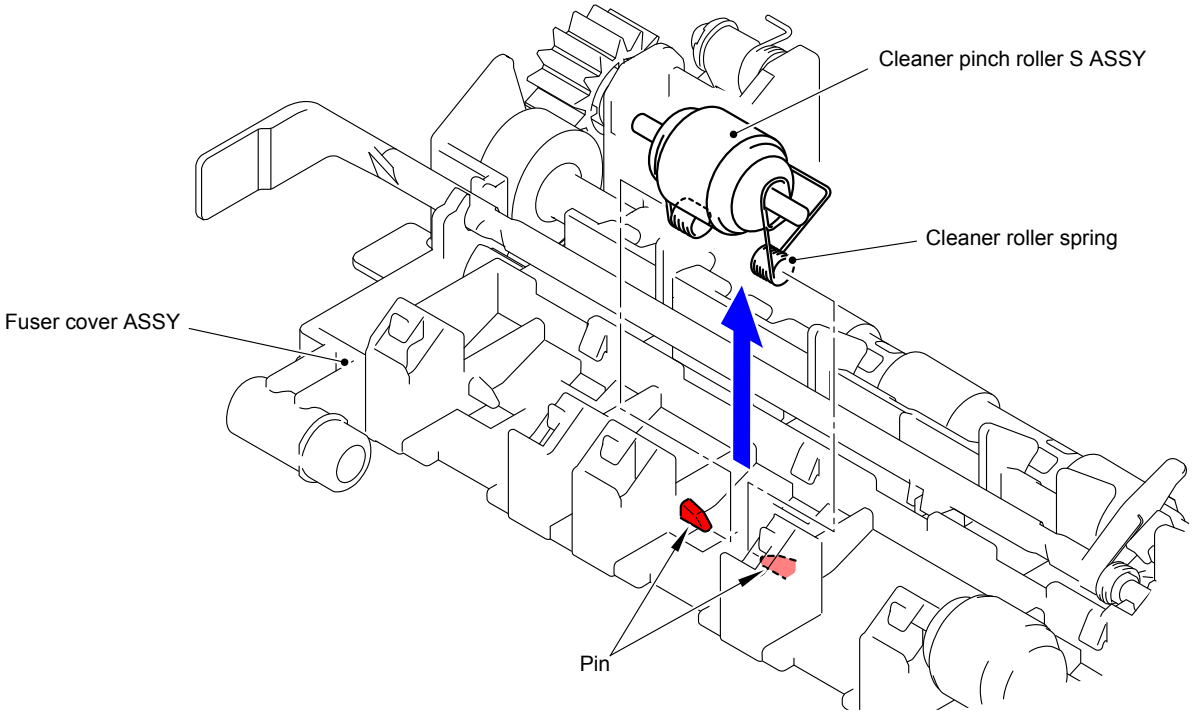

Fig. 7-10

(12) Remove the Cleaner pinch roller S ASSY from the Cleaner roller spring.

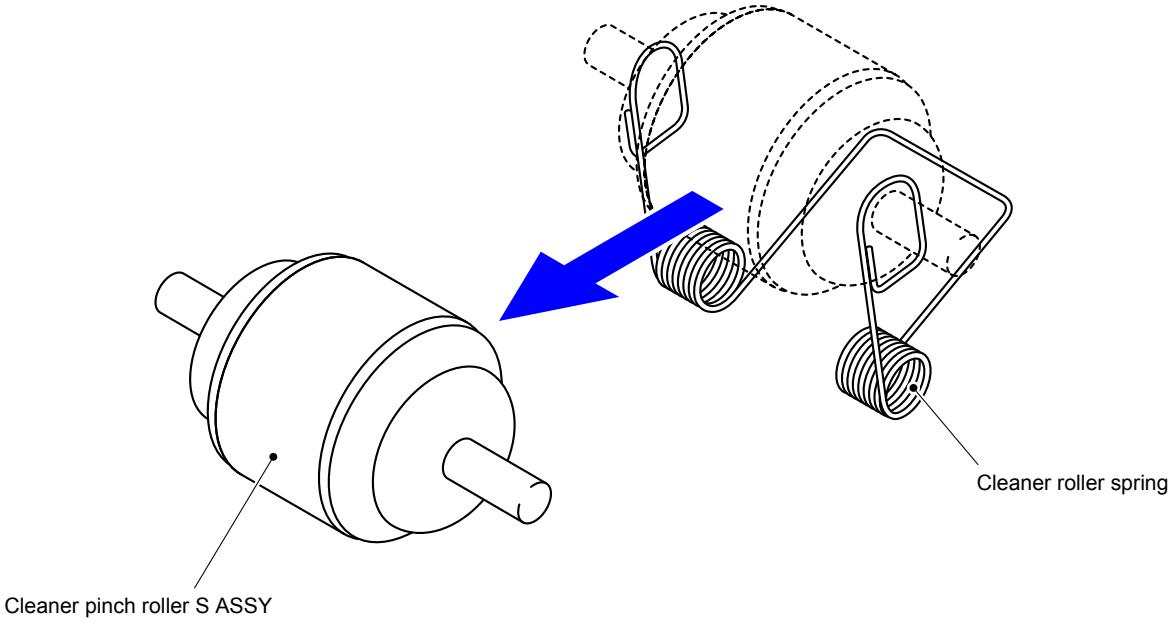

Fig. 7-11

(13) Remove the other three Cleaner pinch roller S ASSYs in the same way.

(14) Remove the two Taptite bind B M4x12 screws from the Fuser cover R.

(15) Release the two Hooks and remove the Fuser cover R from the Main body.

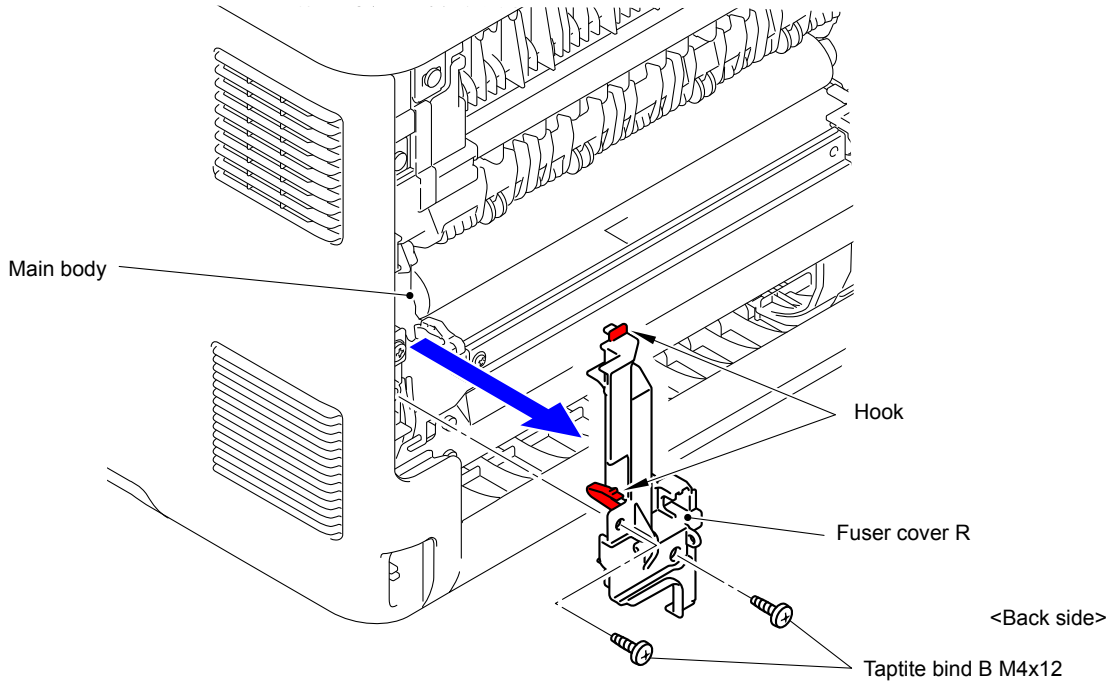

Fig. 7-12

(16) Disconnect the two Connectors (CN1 and CN2) from the Eject sensor PCB ASSY.

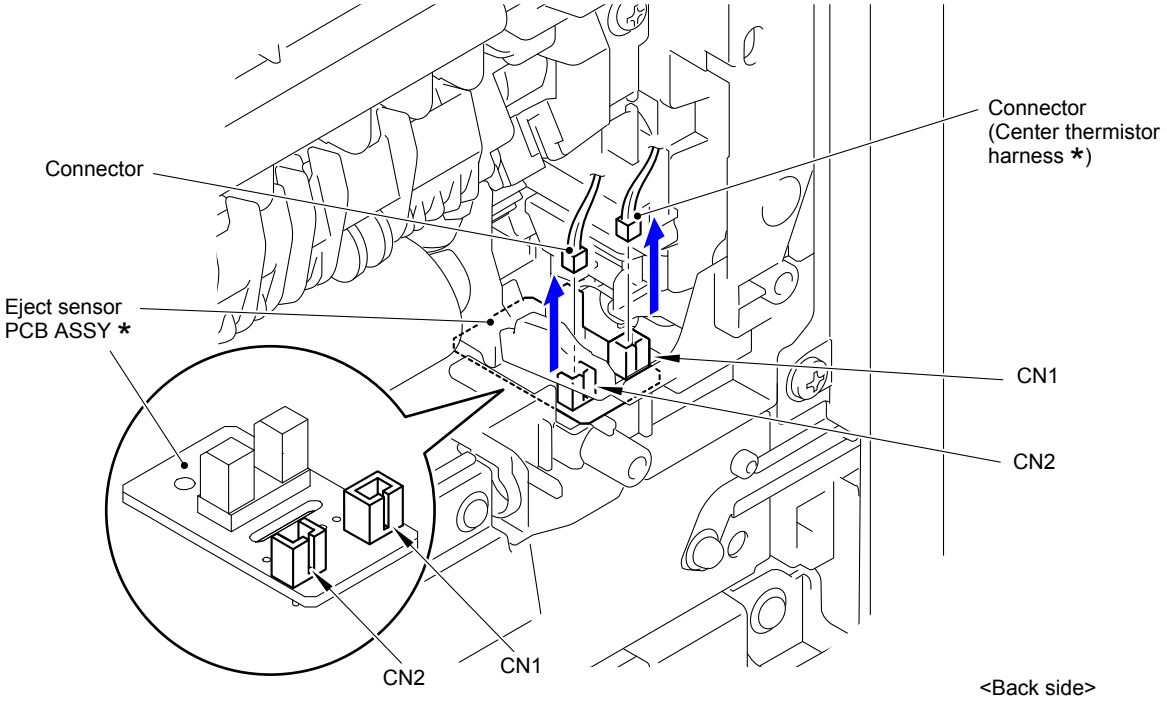

Fig. 7-13

Assembling Note:

* Center thermistor has a black and blue connectors (230V models only).
The black connector may be connected to the blue insertion port and vice versa.

(17) Disconnect the Electrode terminal of the Main body from the Electrode terminal of the Fuser unit.

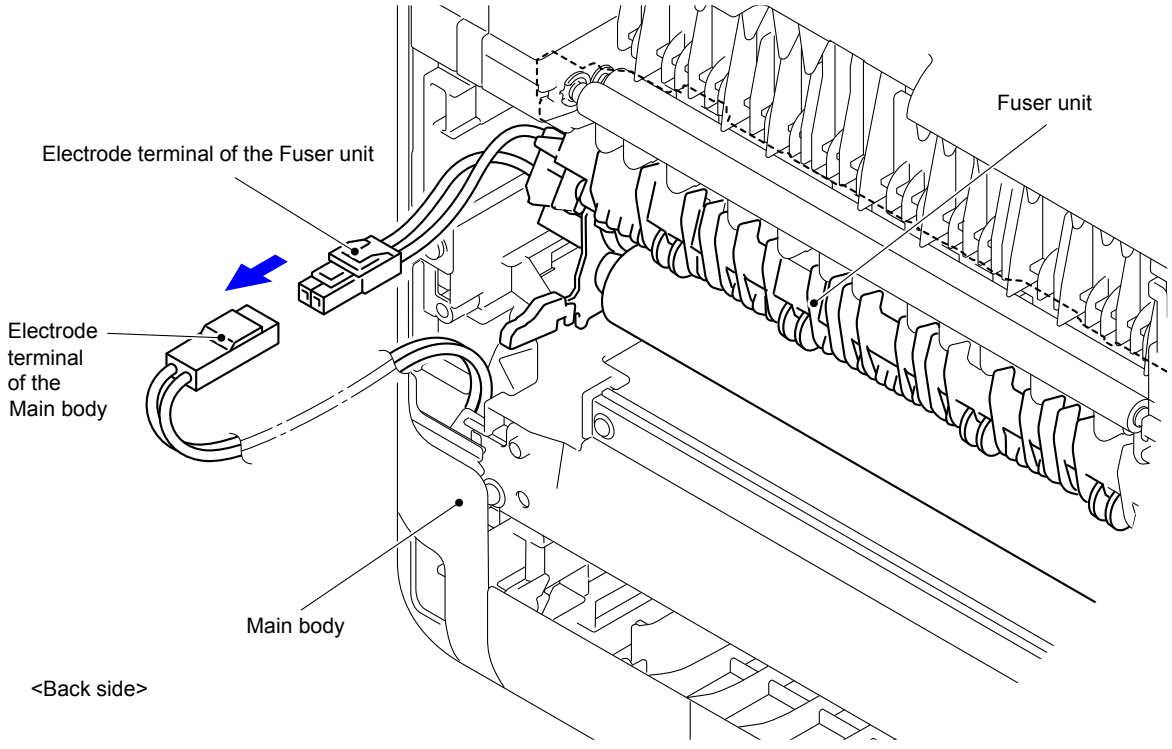

Fig. 7-14

(18) Remove the two Taptite pan B M4x14 screws to remove the Fuser unit from the Main body.

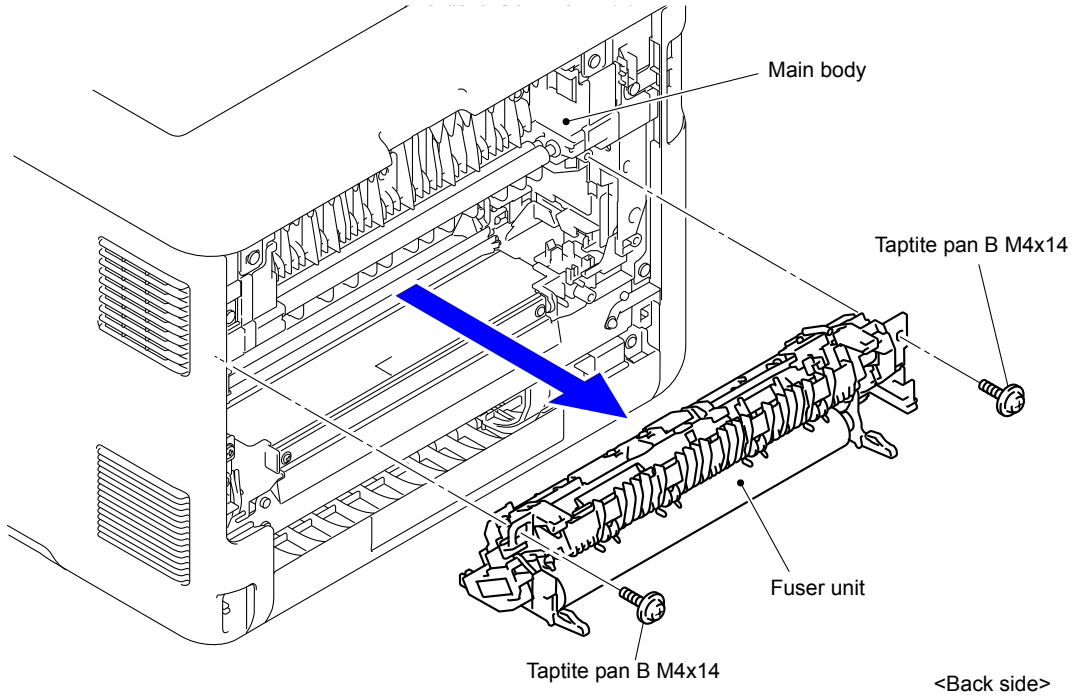

Fig. 7-15

Note:

- Do not apply a physical impact or vibration to the Fuser unit.
- Do not touch the roller and electrodes as shown in the figure below to prevent breakage of the Fuser unit.

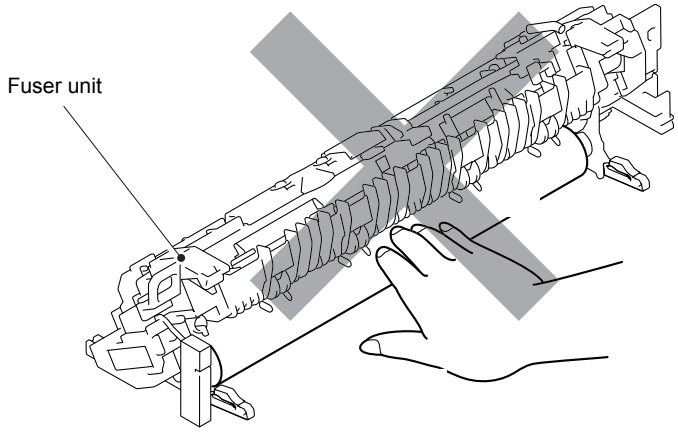

Fig. 7-16

(19) Release the five Hooks and remove the Toner filter ASSY from the Paper eject ASSY.

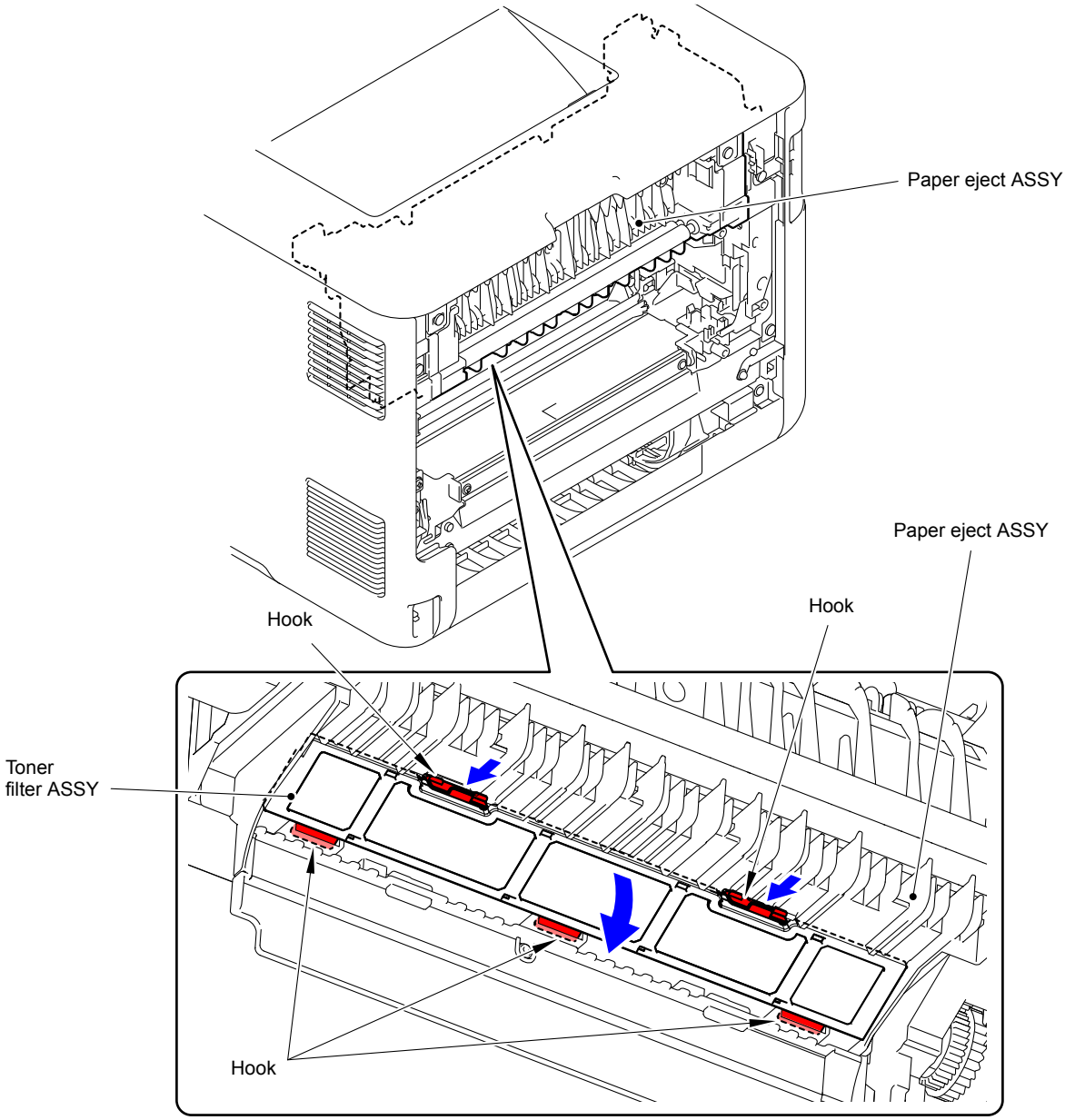

Fig. 7-17

(20) After replacing the Fuser unit, reset the counter.
(Refer to "1.3.29 Reset counters for parts (Function code 88)" in Chapter 5.)

2.1.2 Laser unit

(1) Open the Back cover.

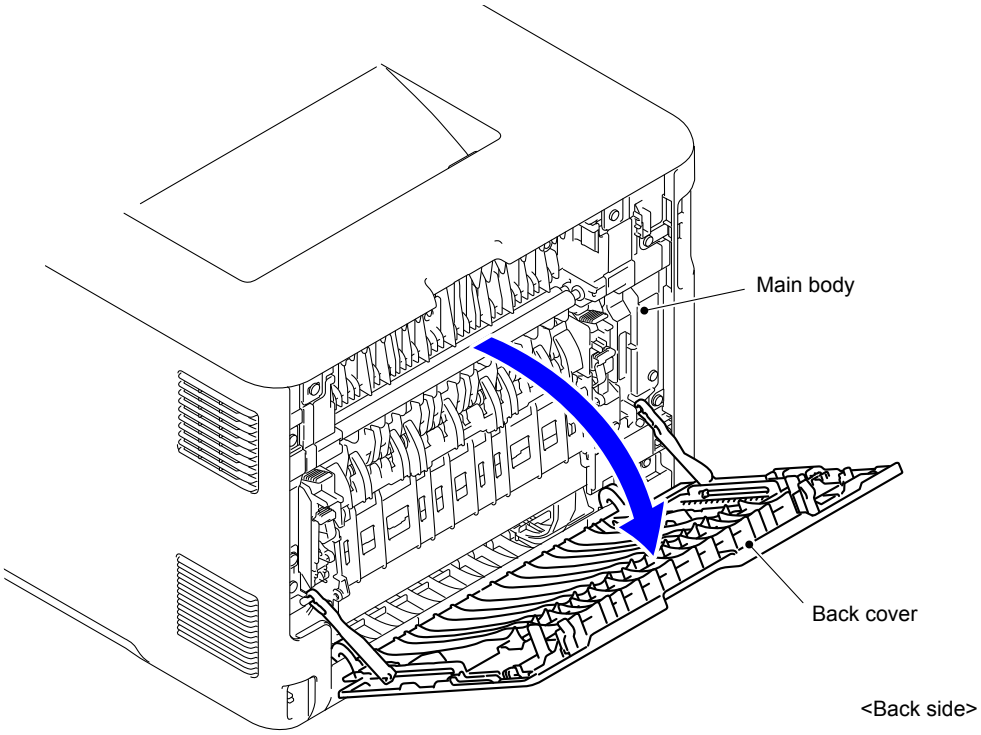

Fig. 7-18

(2) Remove the Back cover stopper arm L/R from the Main body.

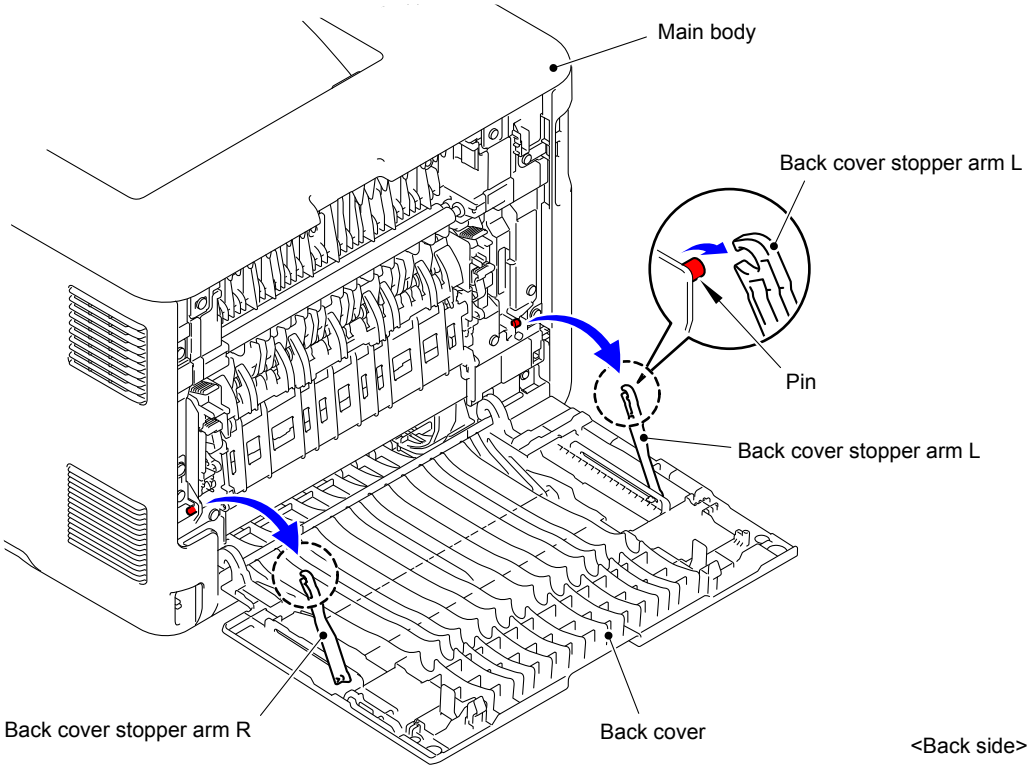

Fig. 7-19

(3) Remove the Shaft of the Back cover from the Bush on the right side of the Main body.

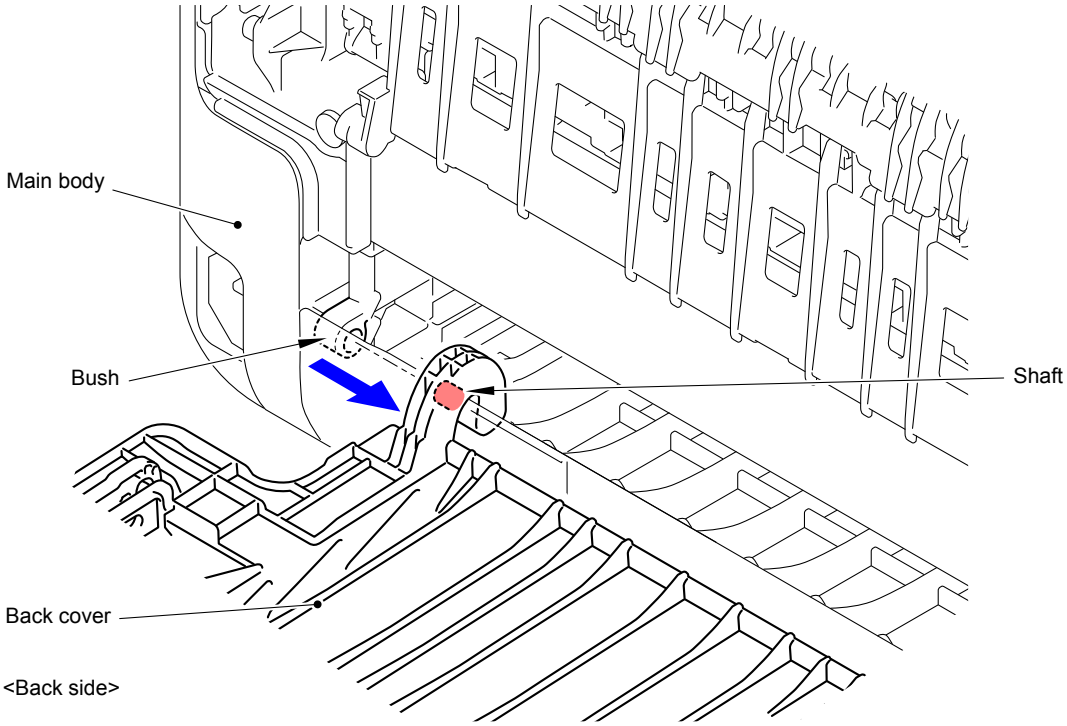

Fig. 7-20

(4) Remove the Back cover.

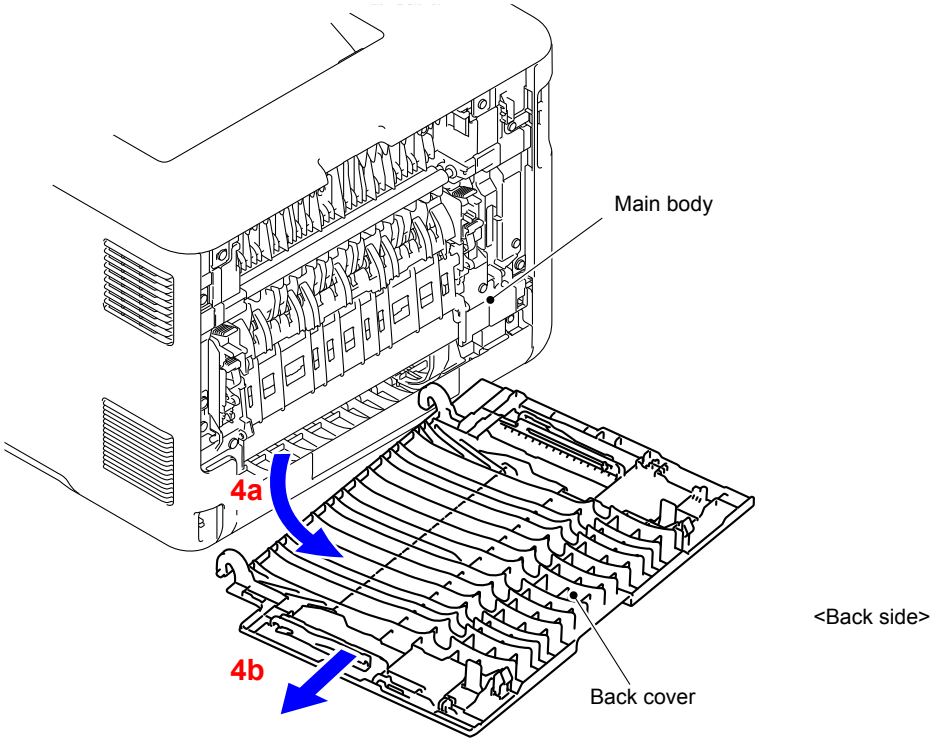

Fig. 7-21

Confidential

(5) Open the Front cover.

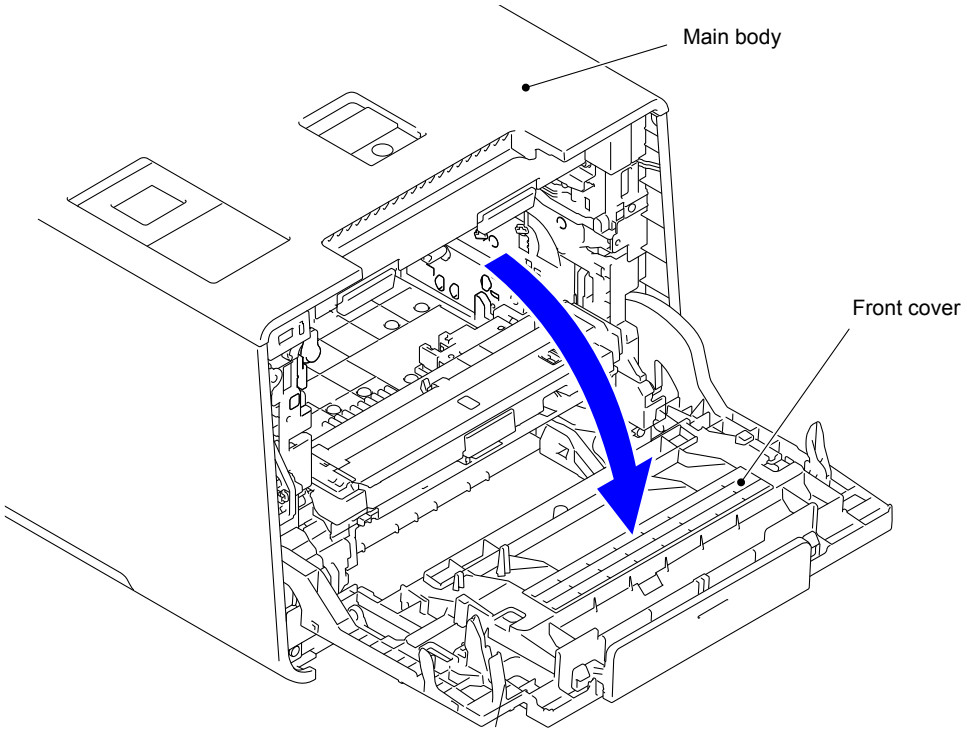

Fig. 7-22

(6) Remove the one Taptite B 3x6 screw and the one Taptite bind B M4x12 screw from the front of the Side cover L ASSY.

(7) Remove the Taptite bind B M4x12 screw from the side of the Side cover L ASSY.

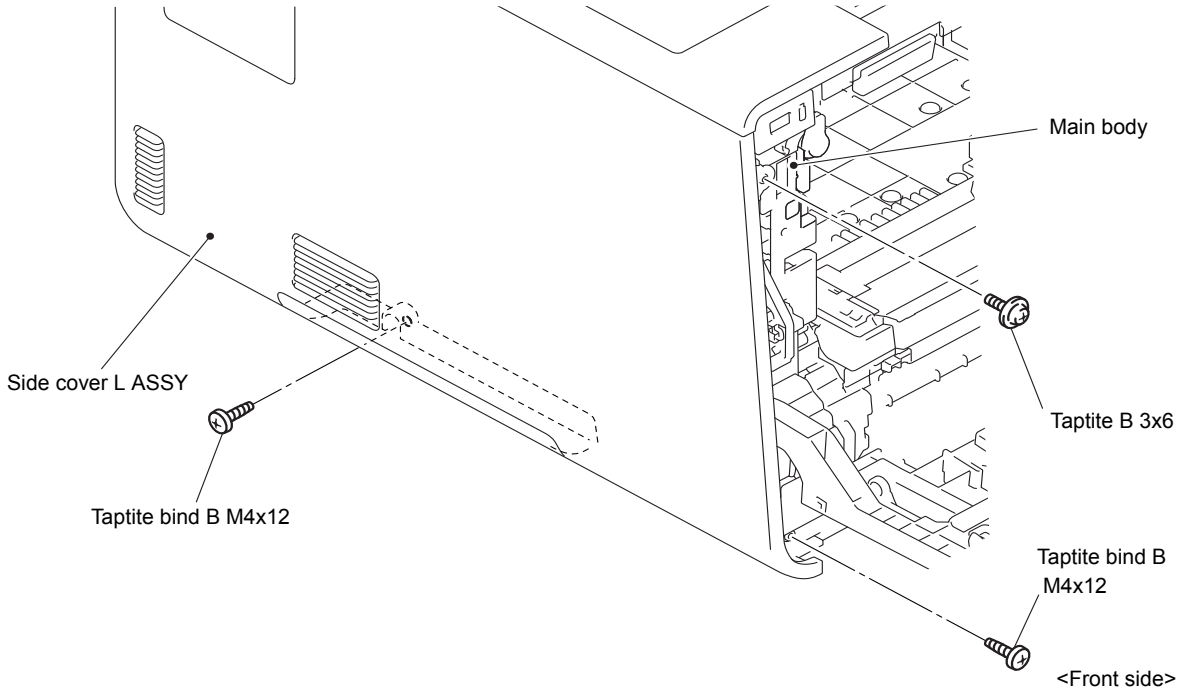

Fig. 7-23

(8) Remove the two Taptite bind B M4x12 screws from the back of the Side cover L ASSY.

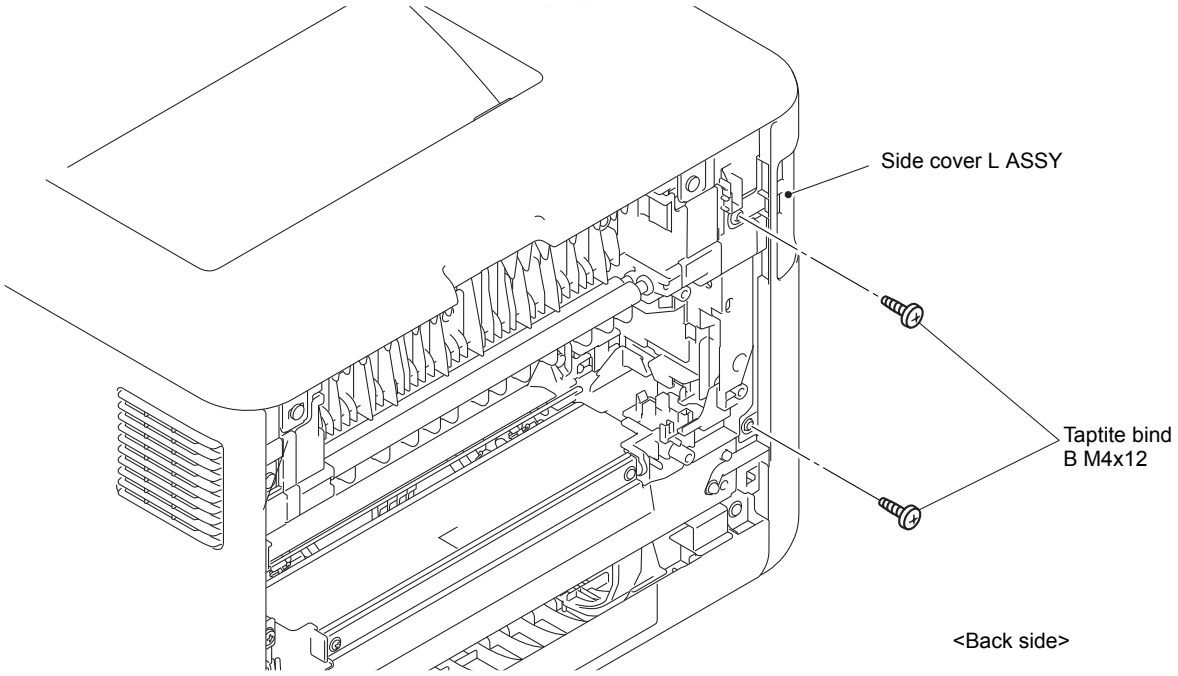

Fig. 7-24

(9) Release the Hooks 1 to 8 in numerical order. Move the Side cover L ASSY in the direction of the arrow 9a and release the Hook 9 and remove the Side cover ASSY from the Main body.

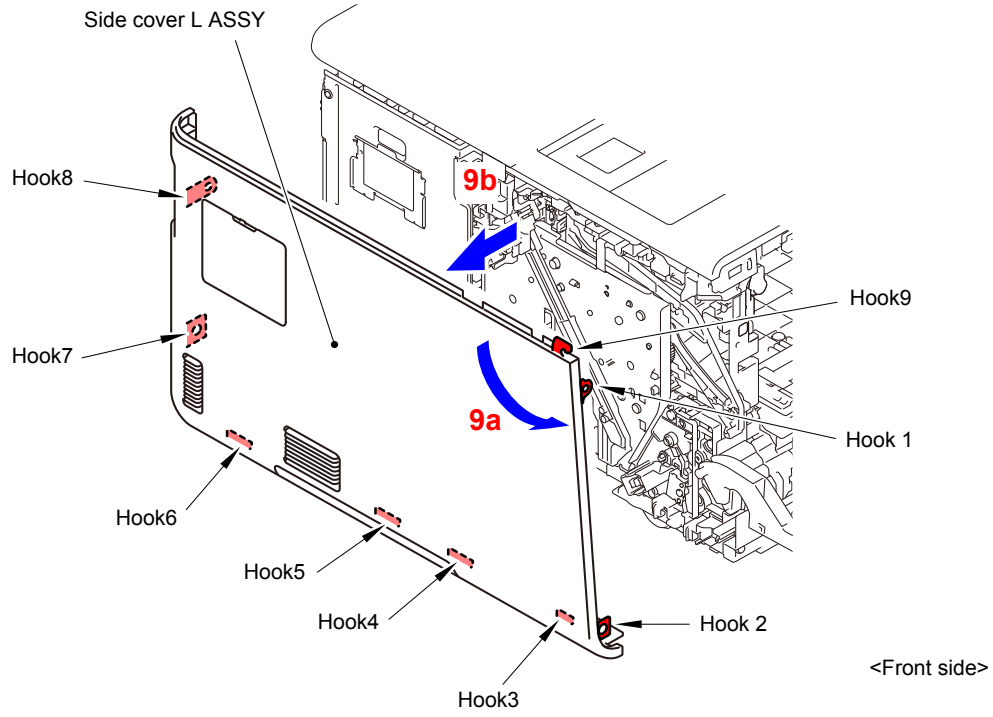

Fig. 7-25

* Inside of Side cover L ASSY

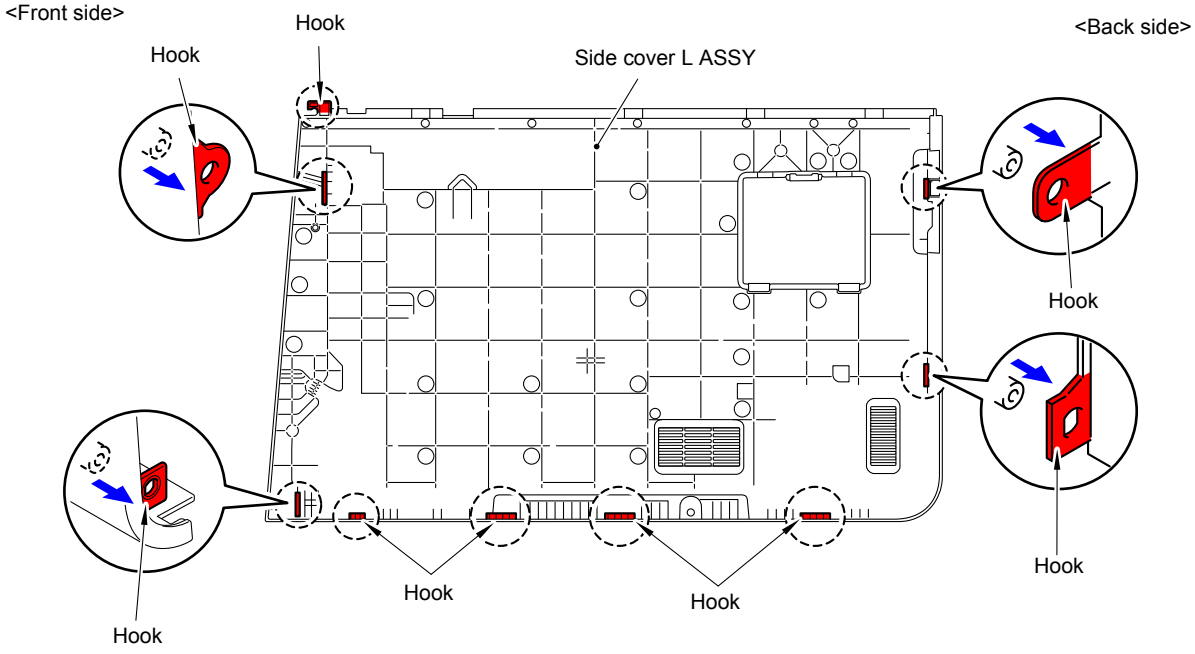

Fig. 7-26

(10) Remove the one Taptite B 3x6 screw and the one Taptite bind B M4x12 screw from the front of the Side cover R.

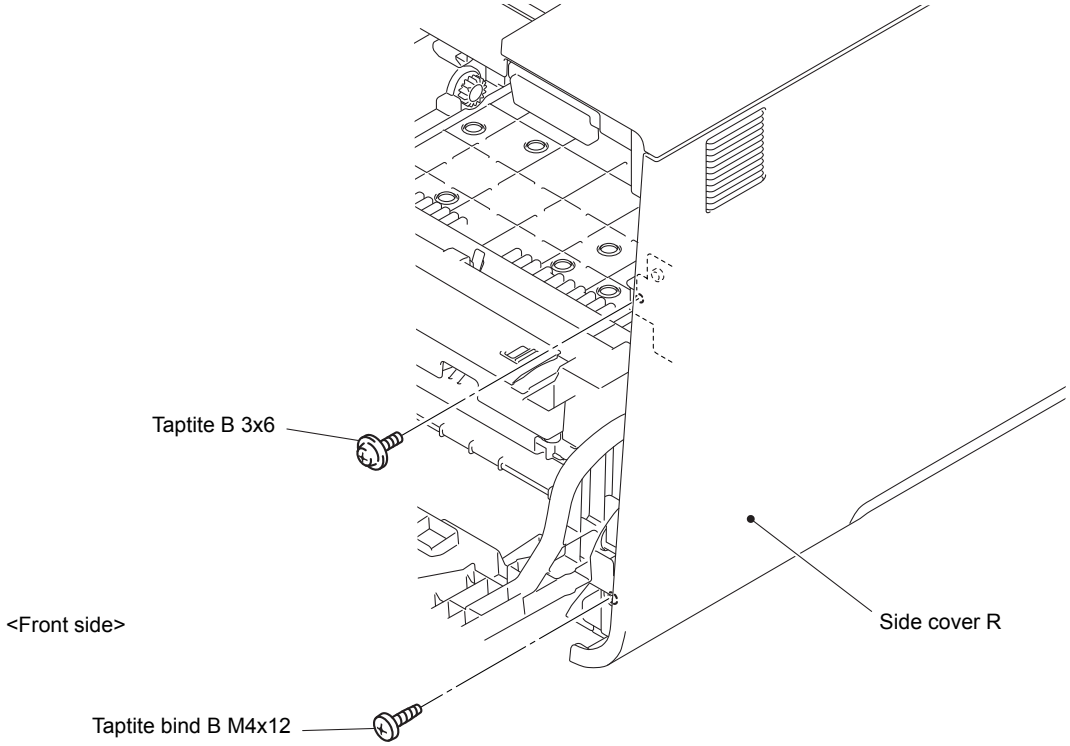

Fig. 7-27

(11) Remove the two Taptite bind B M4x12 screws from the back of the Side cover R.

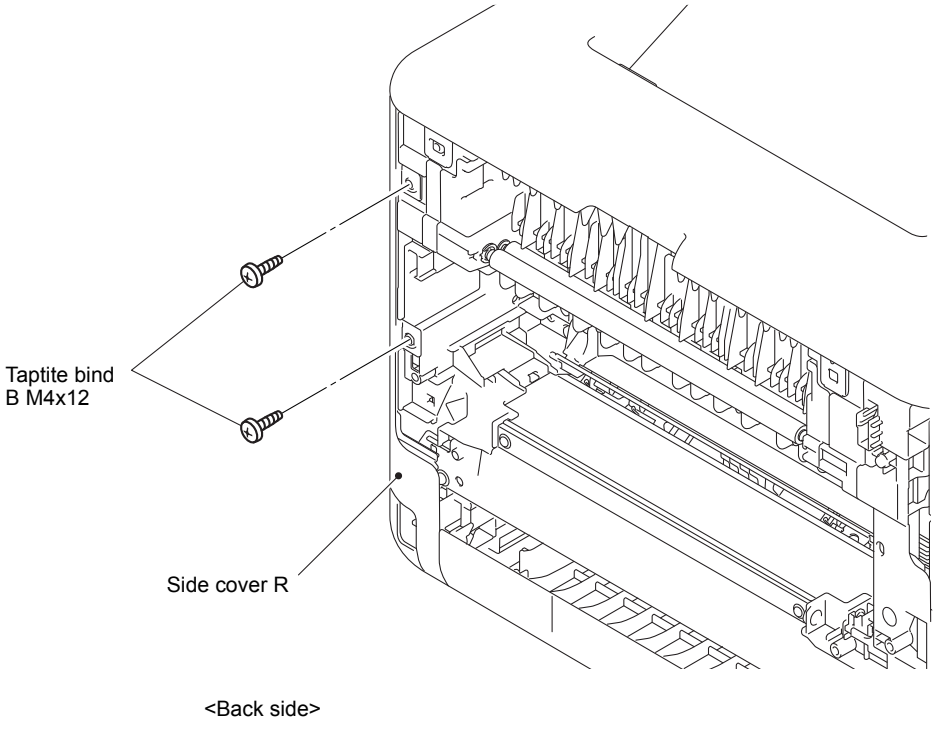

Fig. 7-28

(12) Release the Hooks 1 to 7 in numerical order. Move the Side cover R in the direction of the arrow 12a and release the Hook 8 and remove the Side cover R from the Main body.

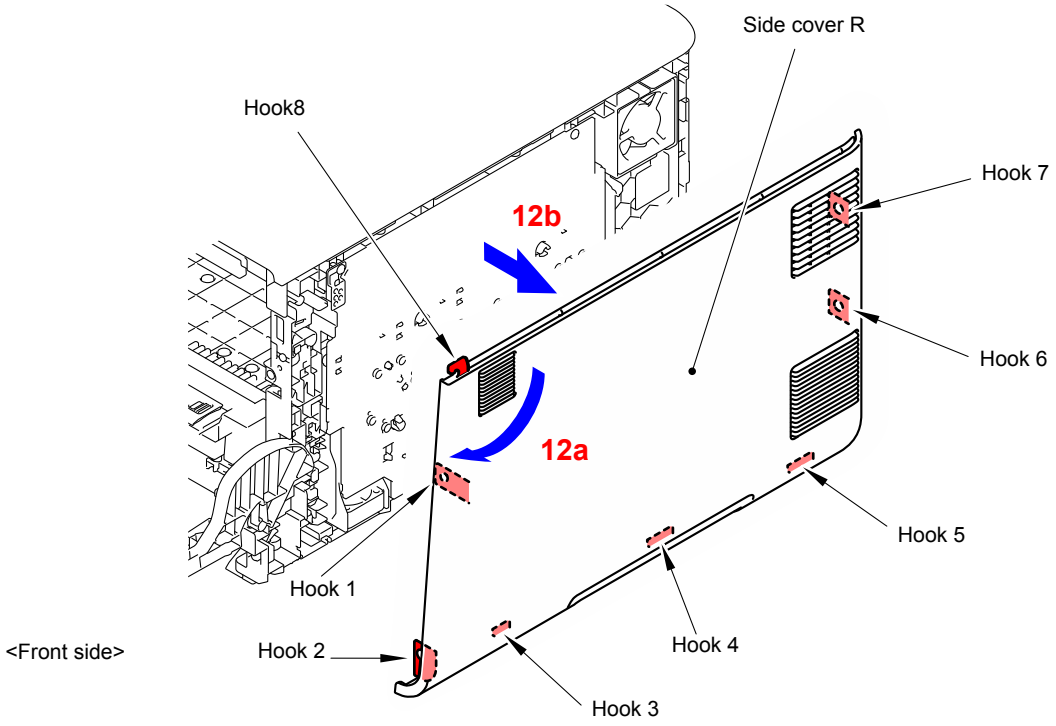

Fig. 7-29

* Inside of Side cover R

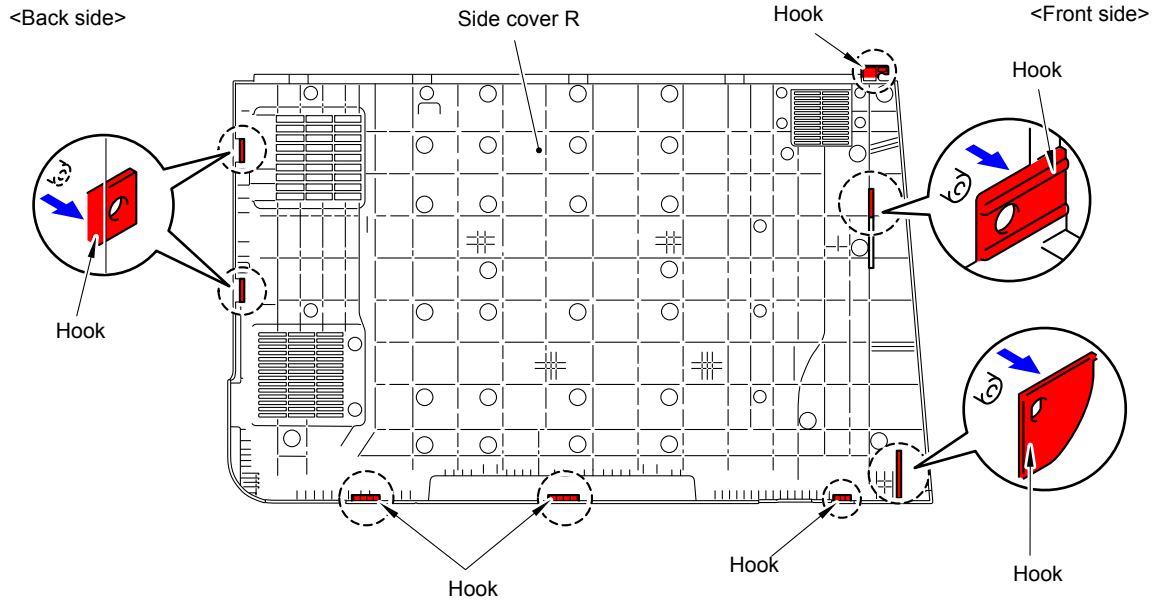

Fig. 7-30

Confidential

Note:
As the Spacer tends to come off, be careful not to lose it.

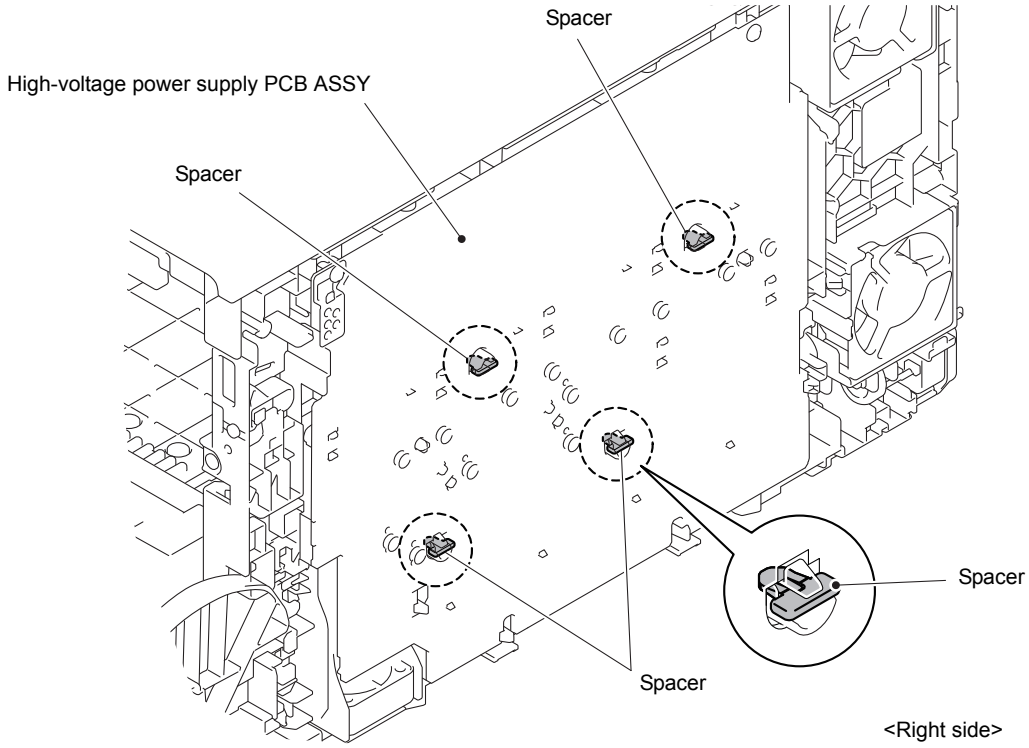

Fig. 7-31

(13) Remove the four Screw bind M3x8 screws and remove the Main shield cover plate ASSY from the Main body.

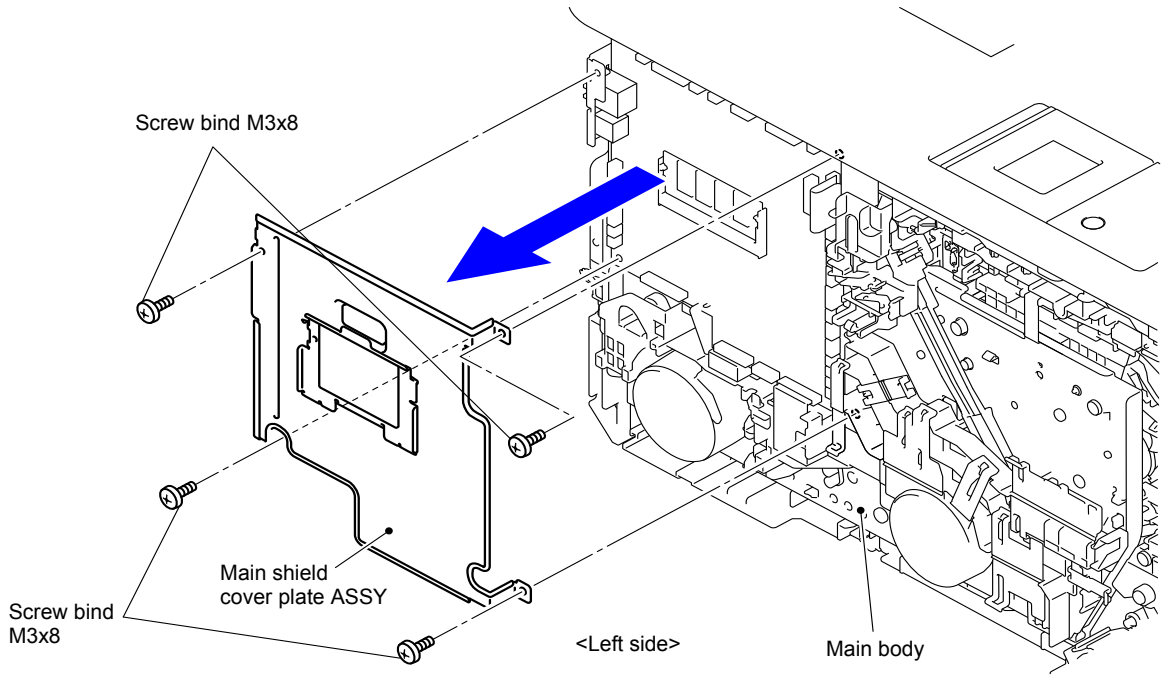

Fig. 7-32

(14) In the case of model without touch panel, disconnect the three Connectors (CN5, CN6 and CN23) from the Main PCB ASSY and release the wiring.
In the case of model with touch panel, disconnect the three Connectors (CN5, CN6 and CN18) from the Main PCB ASSY and release the wiring.

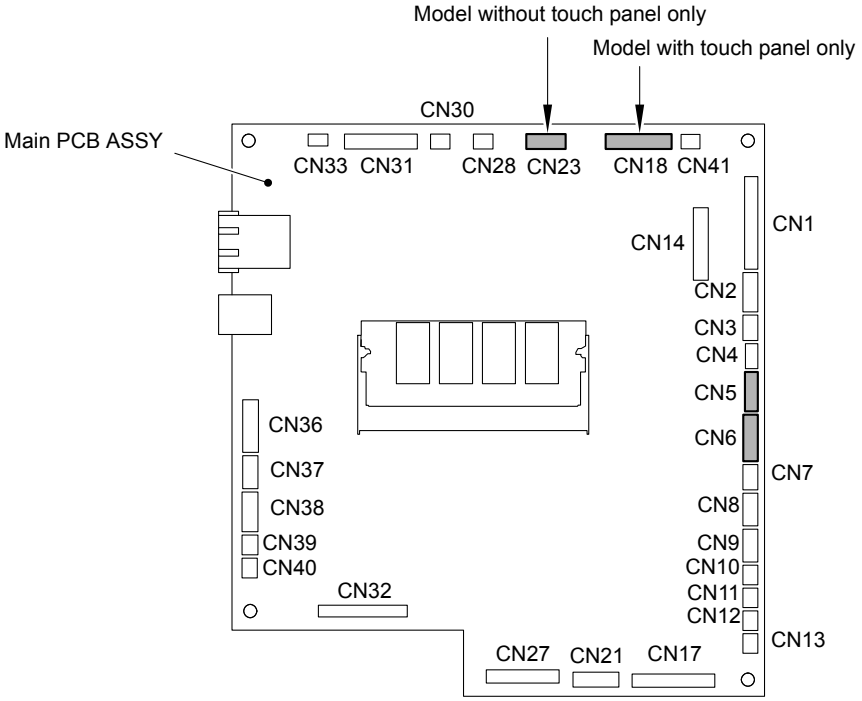

Fig. 7-33

(15) Remove the Taptite cup S M3x8 SR screw from the front of the Top cover ASSY.

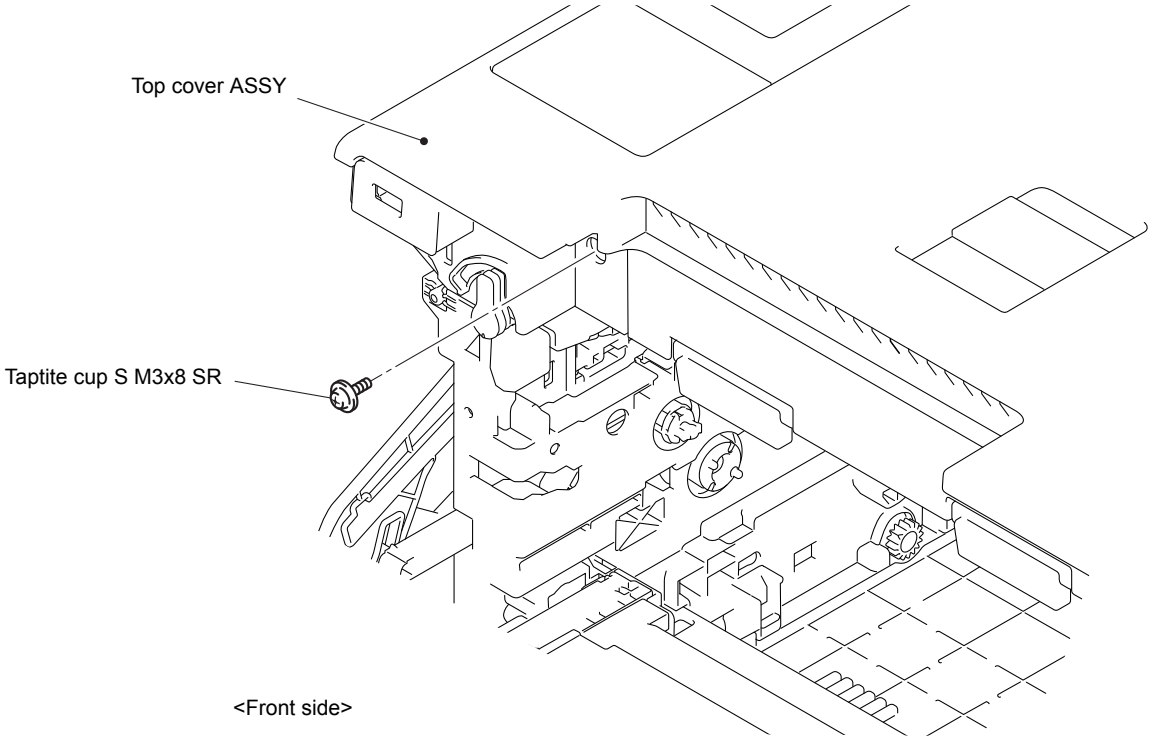

Fig. 7-34

Assembling Note:
Never fail to tighten the screw if the machine to be repaired is a model with a screw.

(16) Remove the two Taptite bind B M4x12 screws from the back of the Top cover ASSY.

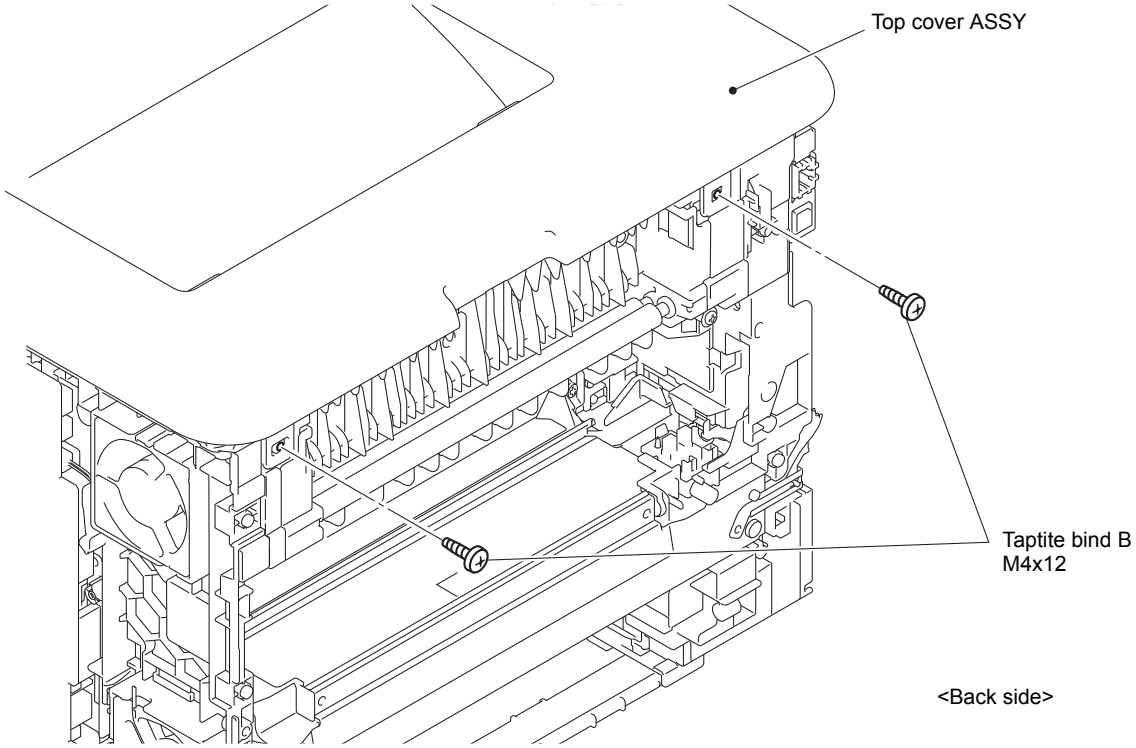

Fig. 7-35

(17) Release the three Hooks 1 and two Bosses. Release the other six Hooks and remove the Top cover ASSY from the Main body.

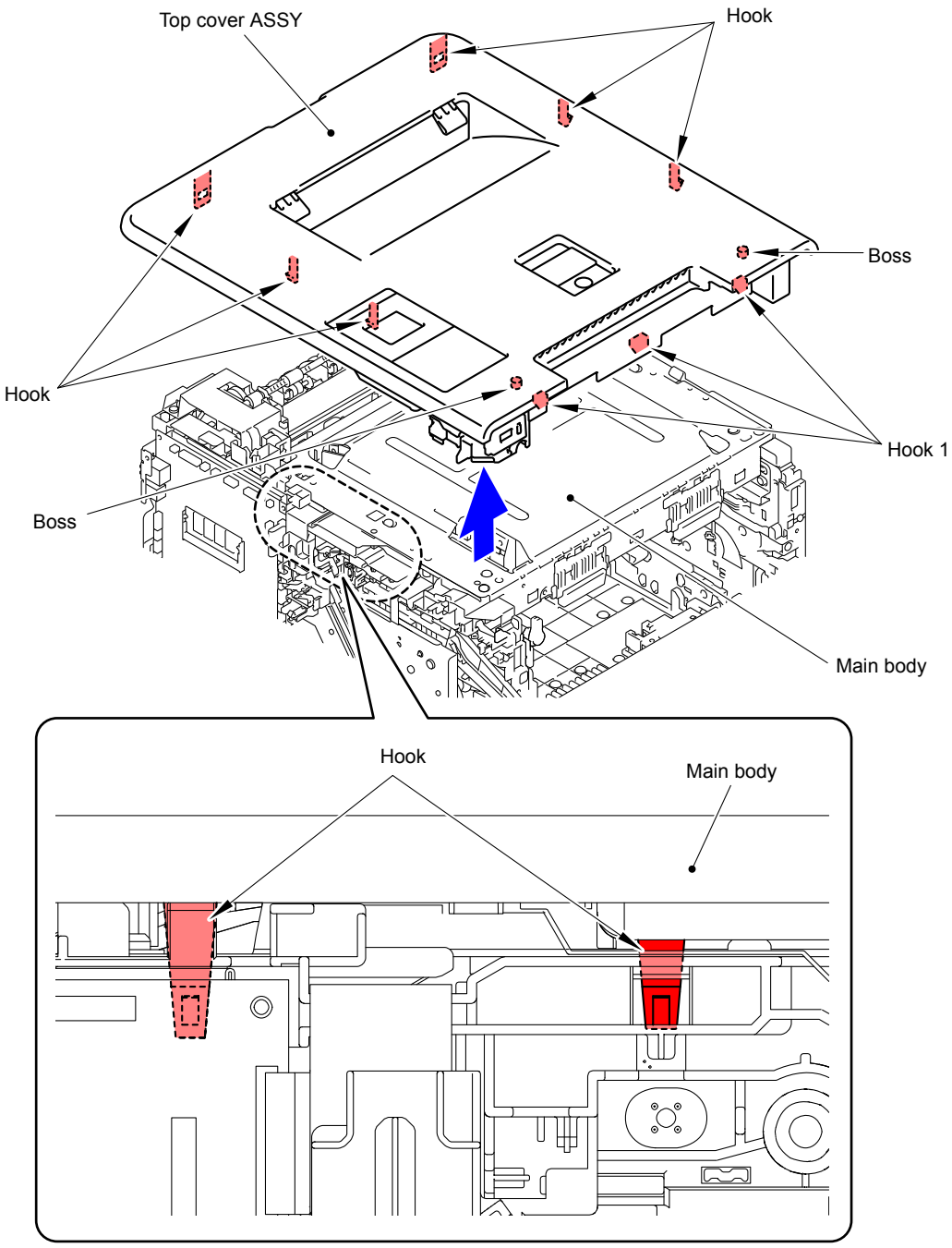

Fig. 7-36

(18) Remove the six Taptite bind B M4x12 screws and four Taptite cup S M3x6 SR screws, and remove the Scanner cover plate from the Main body.

Assembling Note:

When assembling the six screws of the Taptite bind B M4x12, be sure to assemble them in the order shown in the figure.

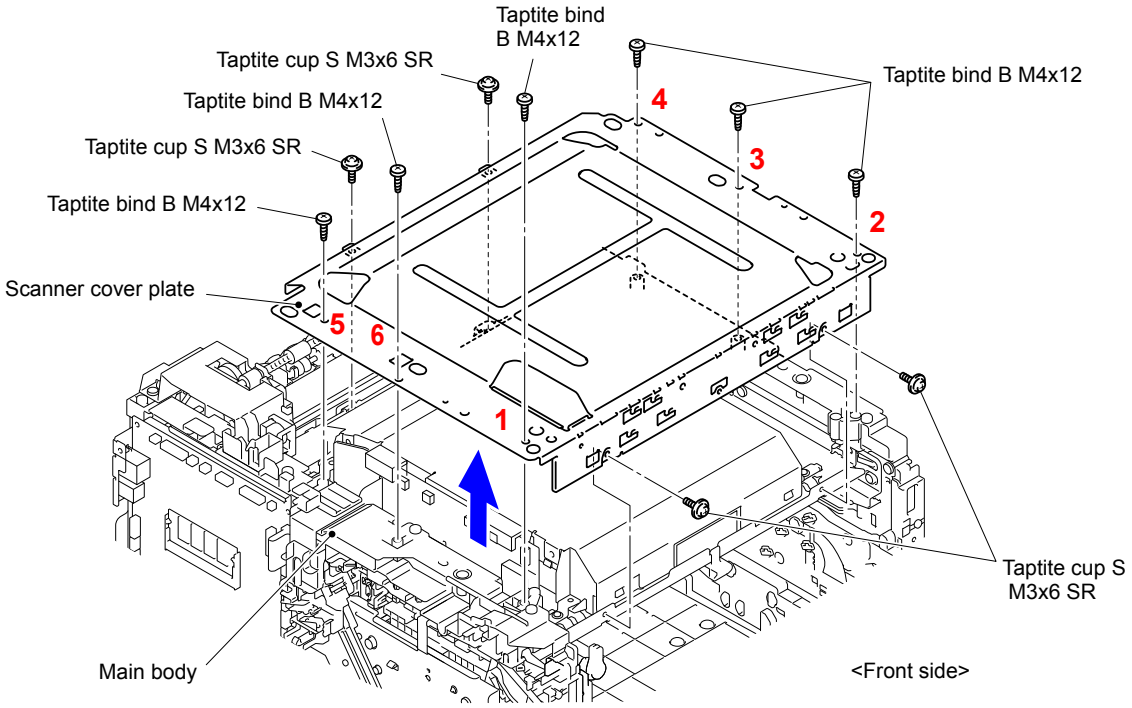

Fig. 7-37

(19) Disconnect the Laser unit flat cable from the Laser unit and release the wiring.

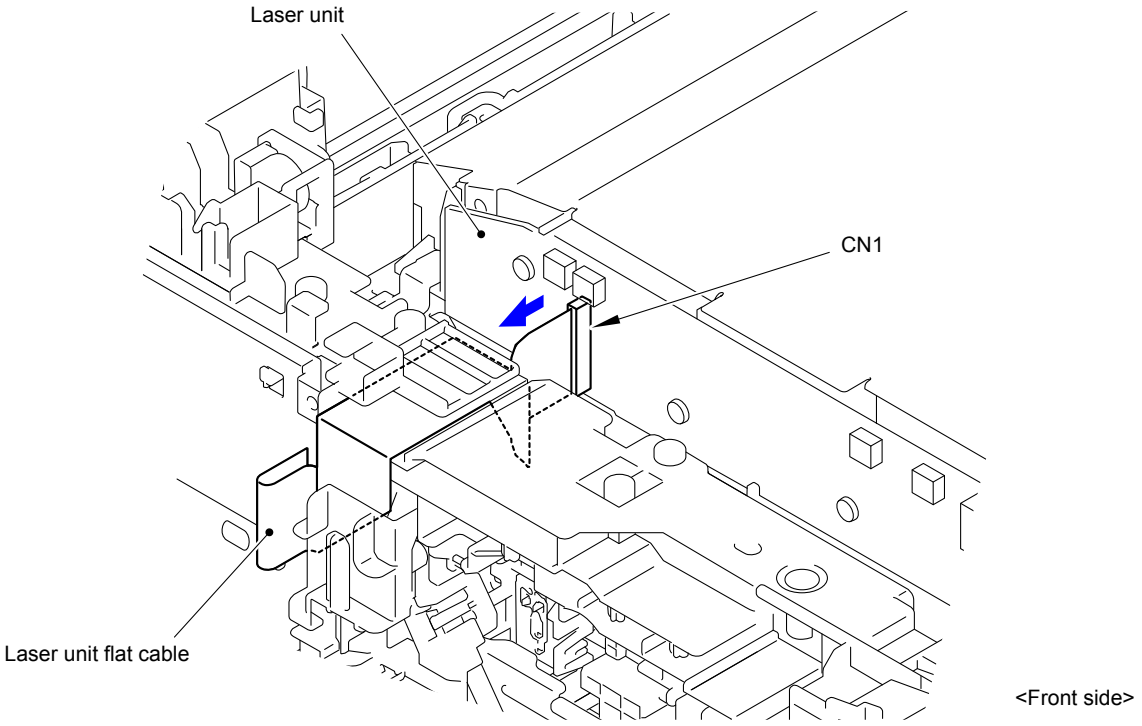

Fig. 7-38

(20) Remove the five Taptite cup S M3x6 SR screws and remove the four Scanner holders from the Scanner plate.

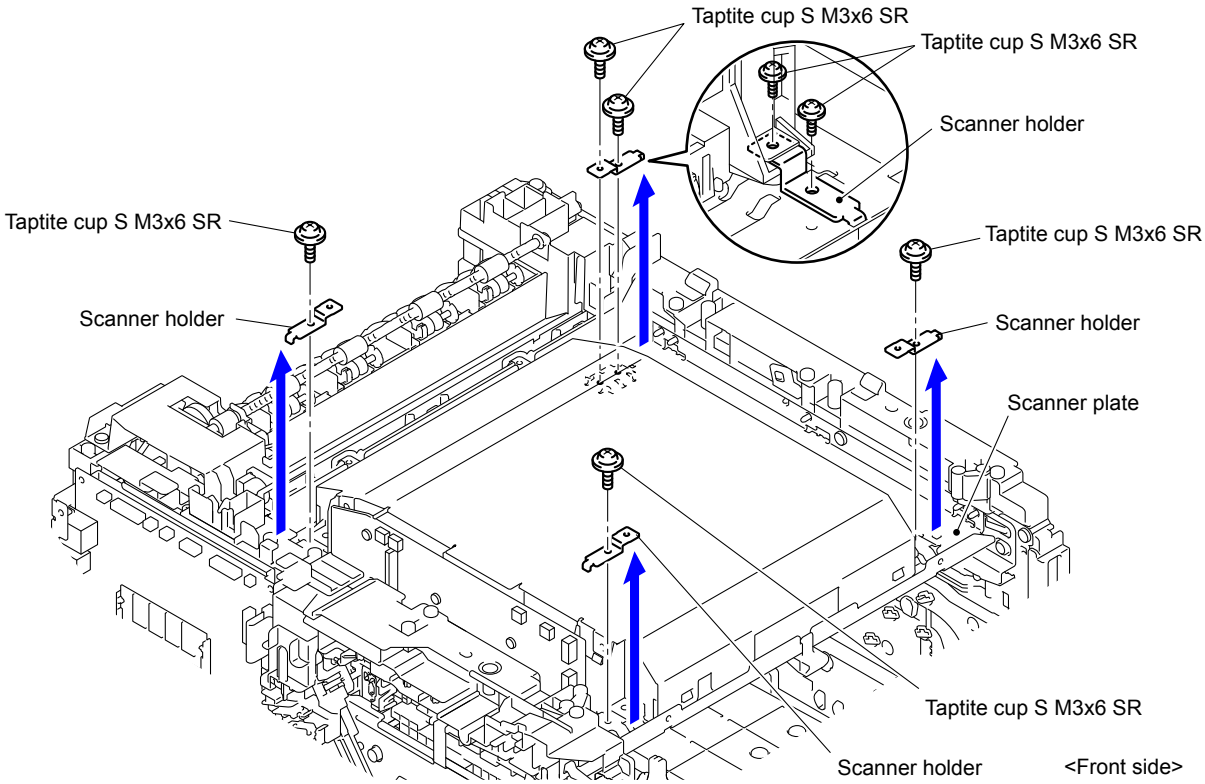

Fig. 7-39

Assembling Note:

- When assembling the Scanner holder to “A” of the Laser unit, be sure to use the Scanner holder of which “B” is a screw and not to use other Scanner holders.
- When assembling the Scanner holder to “A” of the Laser unit, be sure that the Scanner holder is placed as shown in the figure.

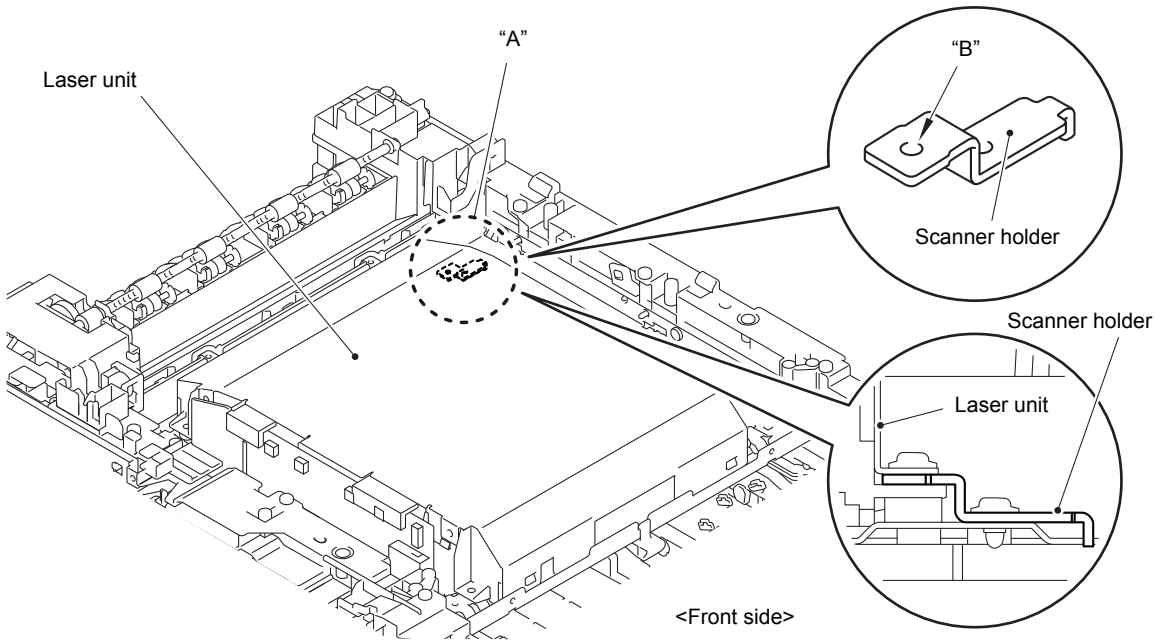

Fig. 7-40

(21) Disconnect the Connector (CN8).

(22) Remove the Laser unit from the Scanner plate.

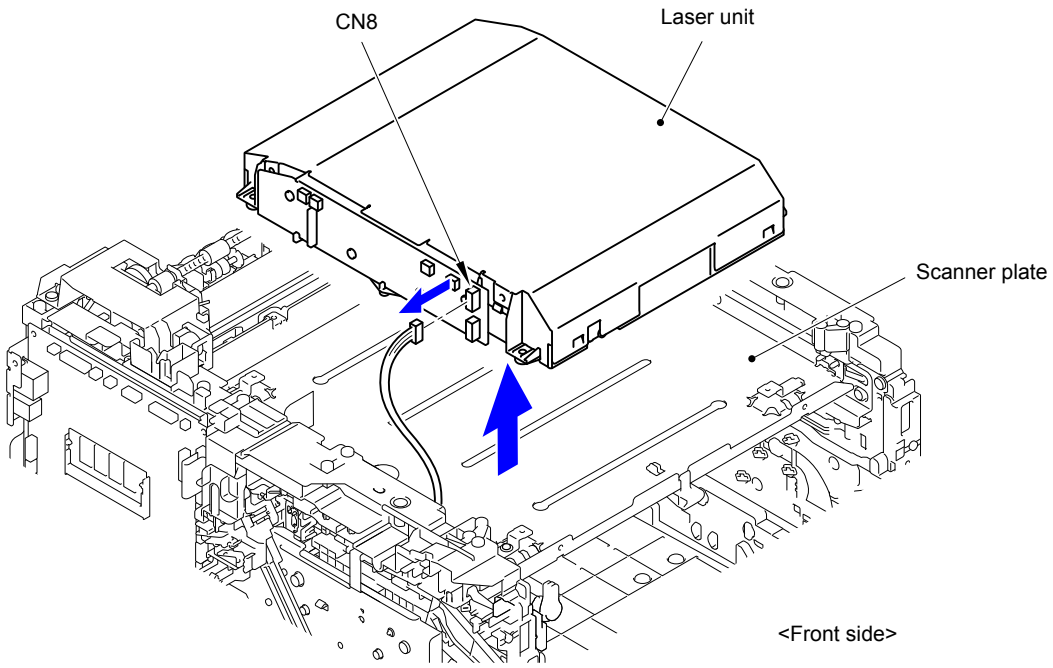

Fig. 7-41

(23) After replacing the Laser unit, reset the counter.
(Refer to "1.3.29 Reset counters for parts (Function code 88)" in Chapter 5.)

2.1.3 PF kit 1

(1) Release the Hook and remove the Separation pad holder ASSY from the Paper tray 1.

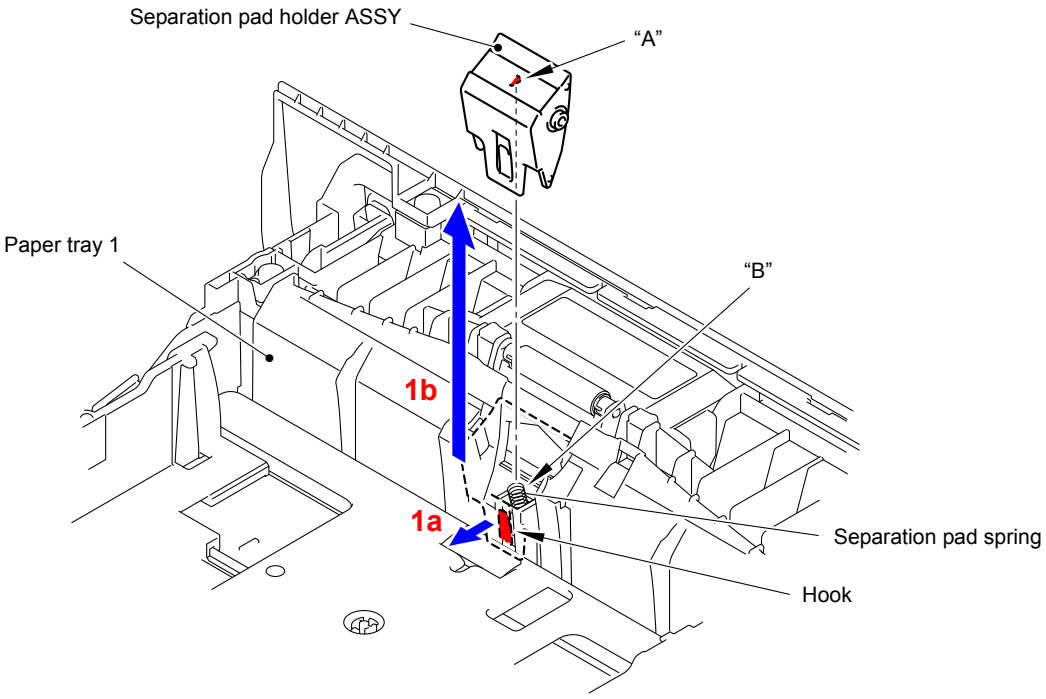

Fig. 7-42

Assembling Note:

When assembling the Separation pad holder ASSY, be sure to assemble it in a way that "A" of the Separation pad holder ASSY is inserted into "B" of the Separation pad spring.

(2) Remove the Separation pad spring from the Paper tray 1.

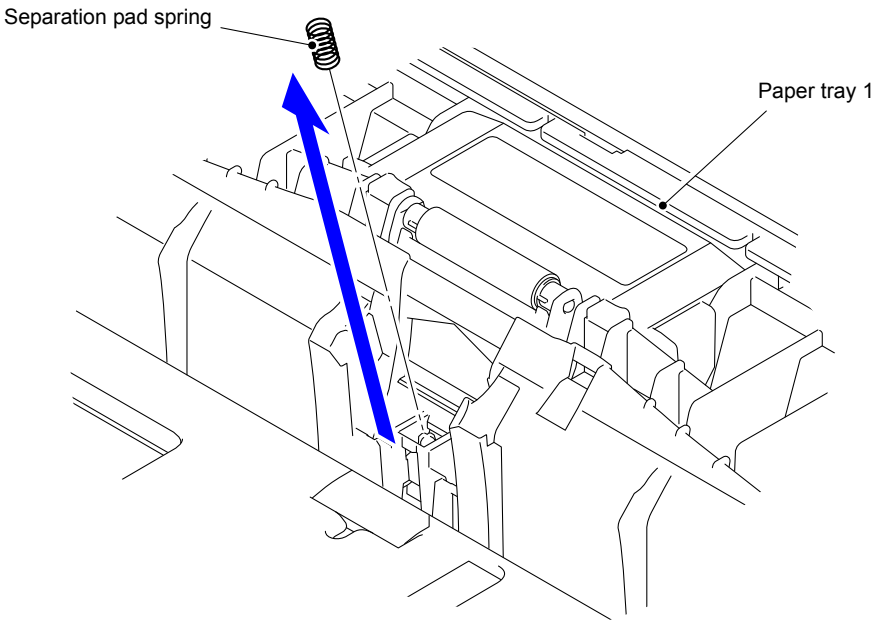

Fig. 7-43

(3) Push the T1 lift arm to the back and remove “B” of the Roller holder ASSY from “A” of the T1 lift arm.

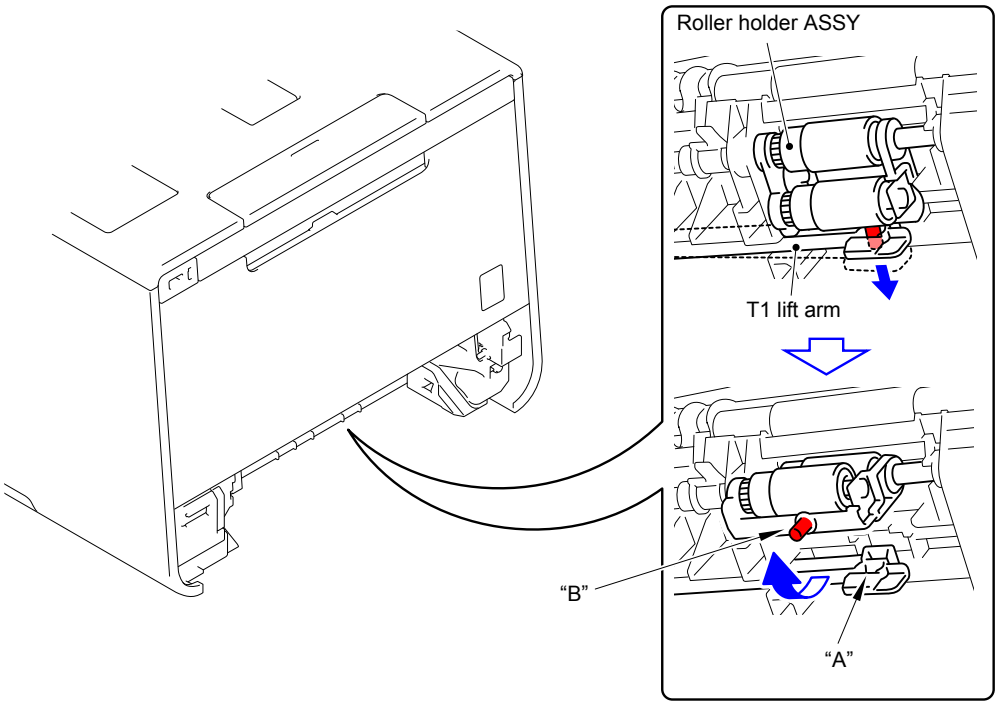

Fig. 7-44

Confidential

(4) Slide the Roller holder ASSY in the direction of the arrow and remove it from the T1 drive shaft gear Z17M07.

(5) Slide the Roller holder ASSY in the direction of the arrow 5a and 5b in this order and remove it from the Paper feed unit.

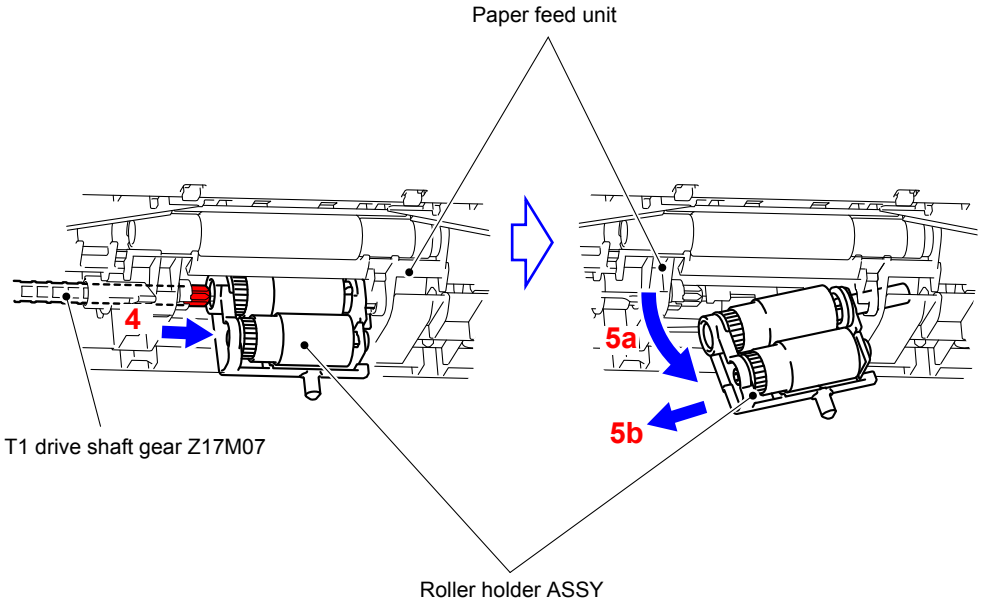

Fig. 7-45

Assembling Note:
Align the Hole of the Paper feed unit to the Shaft of the Roller holder ASSY and insert it into the hole.

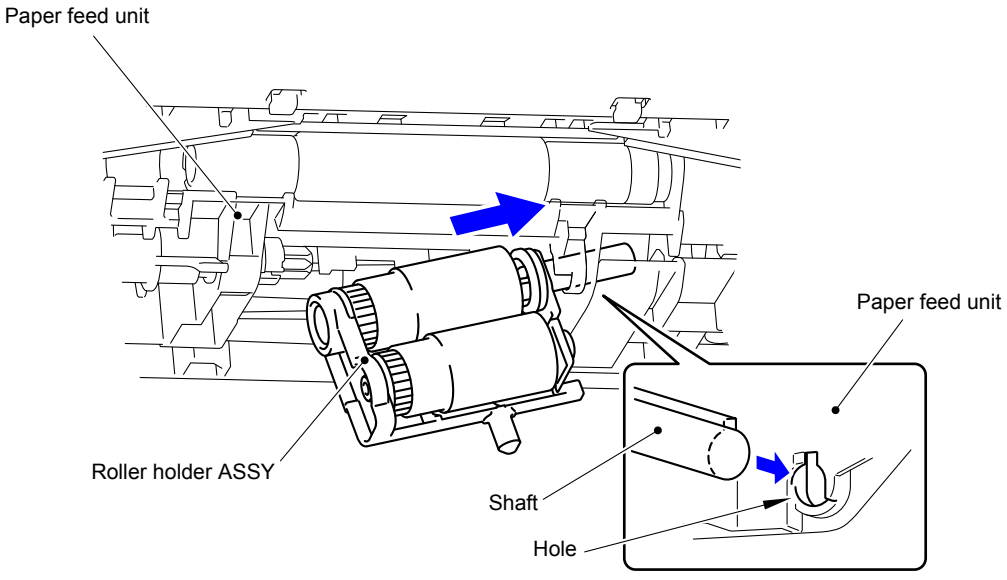

Fig. 7-46

(6) After replacing the PF kit 1, reset the counter.
(Refer to "1.3.29 Reset counters for parts (Function code 88)" in Chapter 5.)

2.1.4 PF kit 2

(1) Release the two Hooks of the T2 separation pad ASSY to remove them in the upward direction.

Note:
Be careful not to lose the T2 separation pad spring.

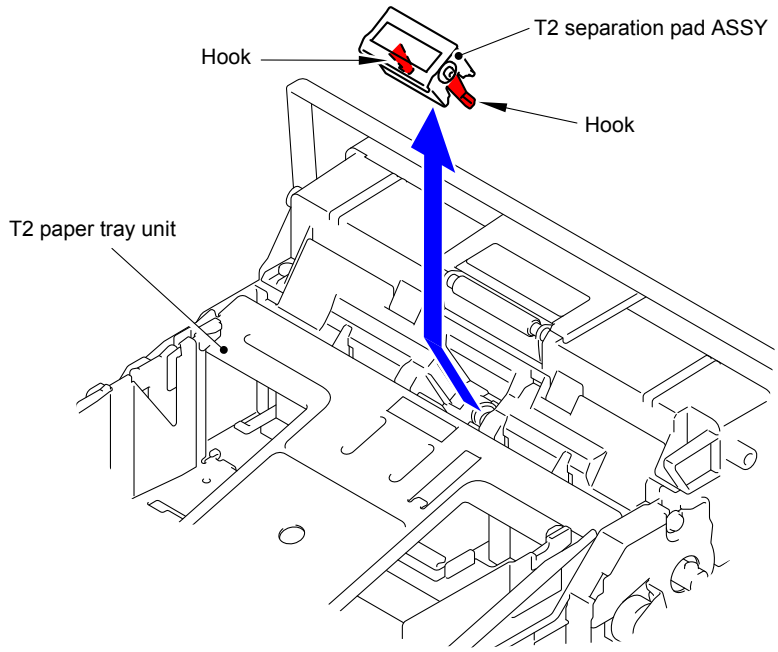

Fig. 7-47

(2) Remove the T2 separation pad spring from the T2 separation pad ASSY.

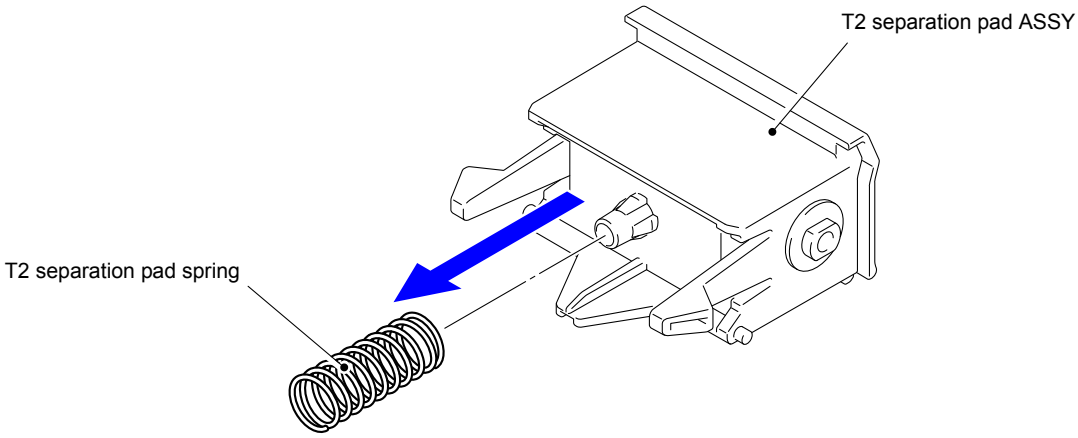

Fig. 7-48

(3) Release the Hook and slide the T2 separation roller ASSY in the direction of the arrow.

(4) Rotate the T2 separation roller ASSY in the direction of the arrow 4a. Remove the T2 separation roller ASSY from the T2 paper feed drive shaft in the direction of the arrow 4b.

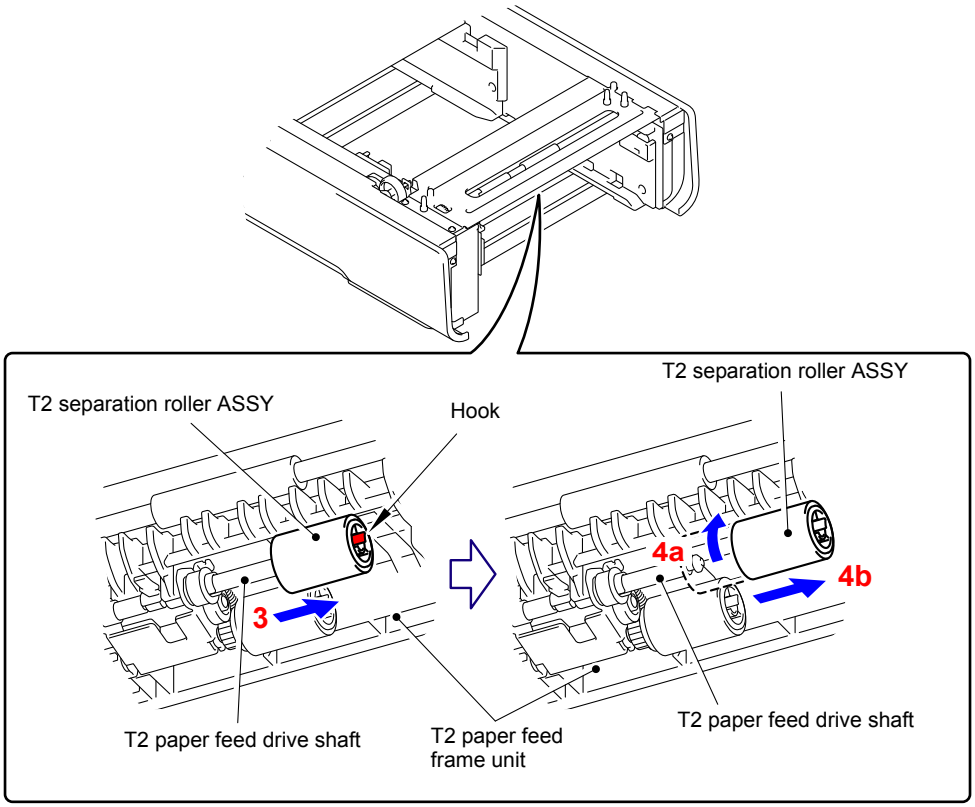

Fig. 7-49

Assembling Note:

When assembling the T2 separation roller ASSY, assemble it by sliding it in the direction of the arrow b as rotating the T2 separation roller ASSY in the direction of the arrow a.

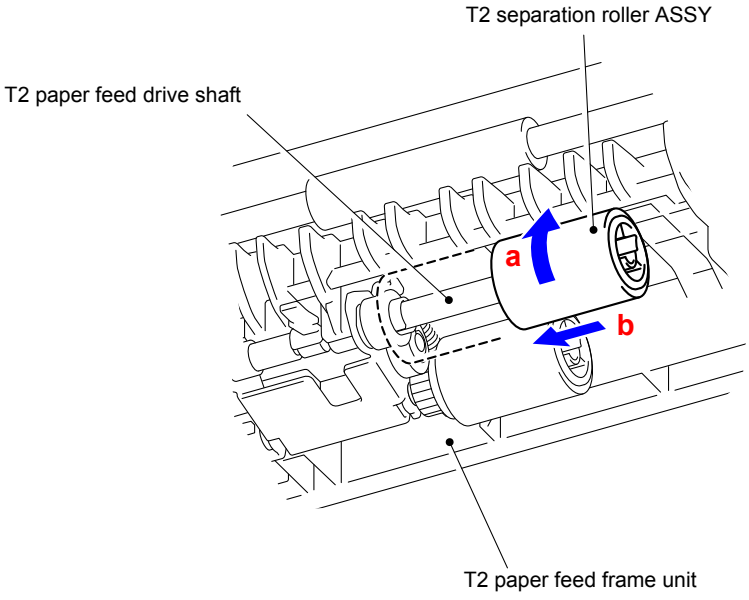

Fig. 7-50

(5) Release the Hook and remove the T2 paper pick-up roller ASSY from the T2 paper feed drive shaft.

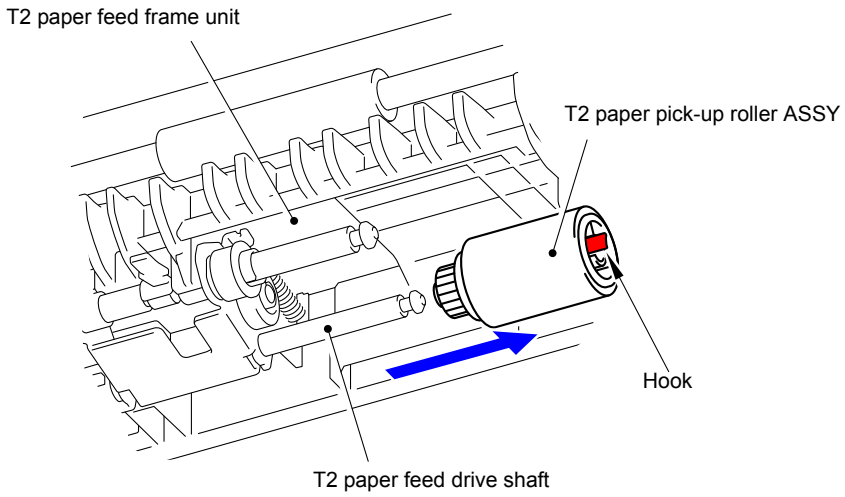

Fig. 7-51

(6) After replacing the PF kit 2, reset the counter.
(Refer to "1.3.29 Reset counters for parts (Function code 88)" in Chapter 5.)

2.1.5 PF kit MP

(1) Press “A” to release the Hook and remove the MP upper frame cover from the MP upper cover ASSY.

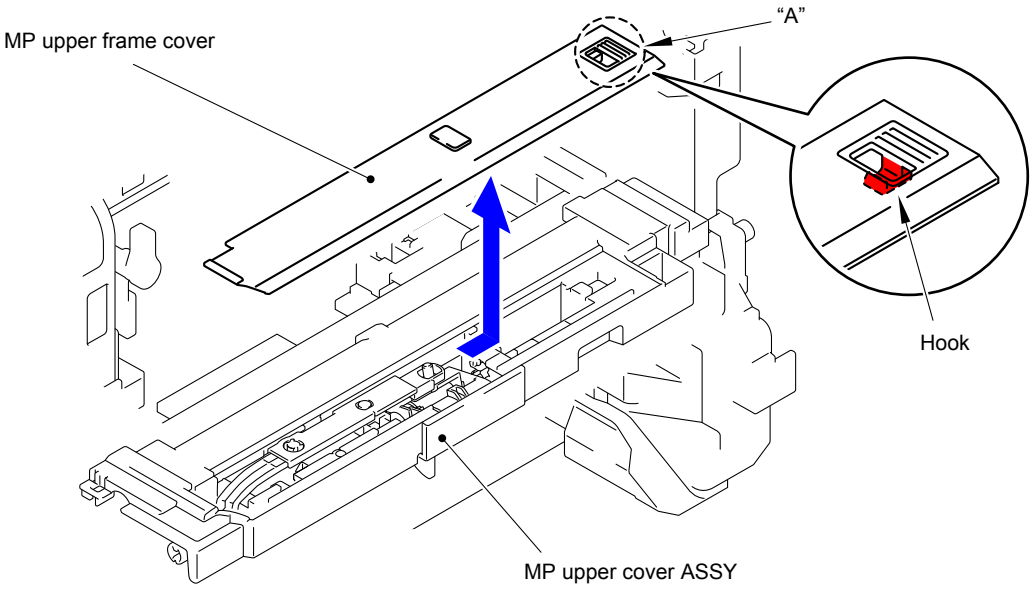

Fig. 7-52

(2) Remove the MP lift arm B from the MP upper cover ASSY.

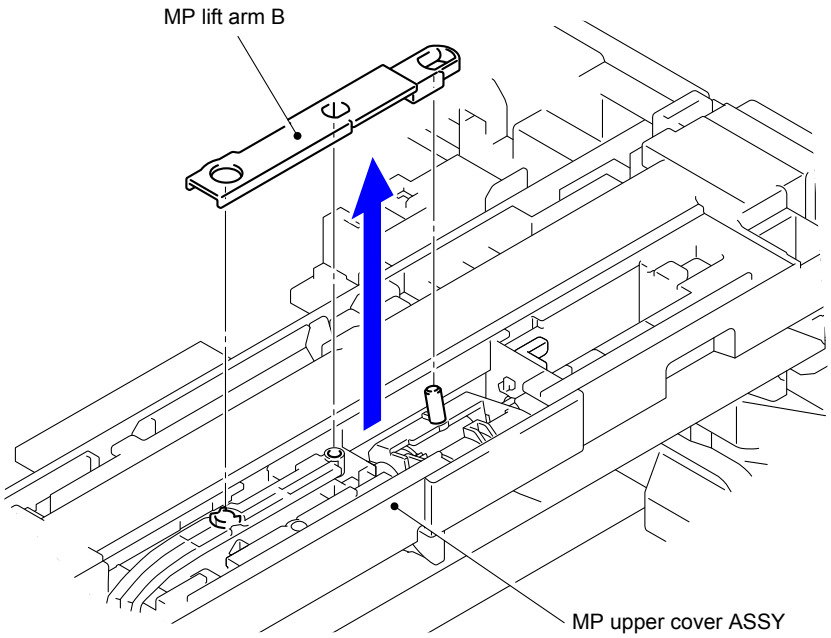

Fig. 7-53

(3) Release the Hook 1 and rotate the MP holder bushing in the direction of the arrow.

(4) Release the Hook 2 and remove the MP holder bushing from the MP upper cover ASSY.

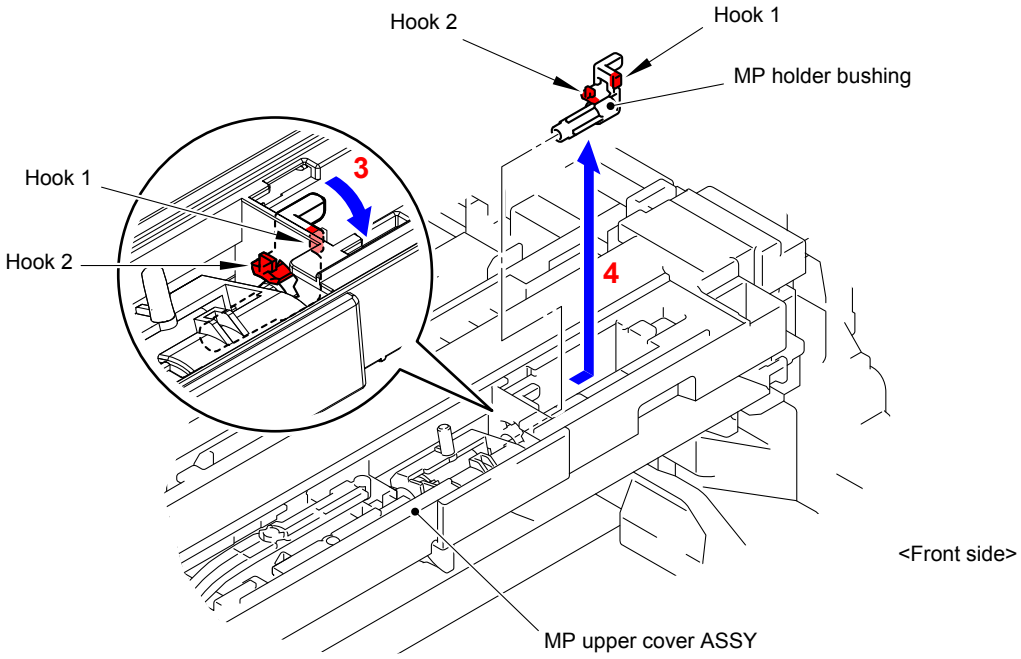

Fig. 7-54

(5) Remove the MP roller holder ASSY from the MP upper cover ASSY.

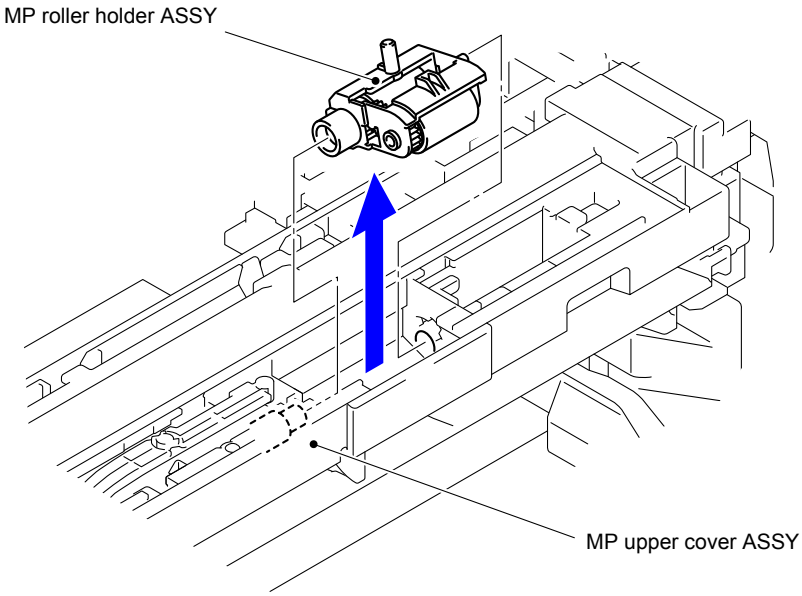

Fig. 7-55

(6) Turn the MP separation pad ASSY upright to remove it from the MP upper cover ASSY.

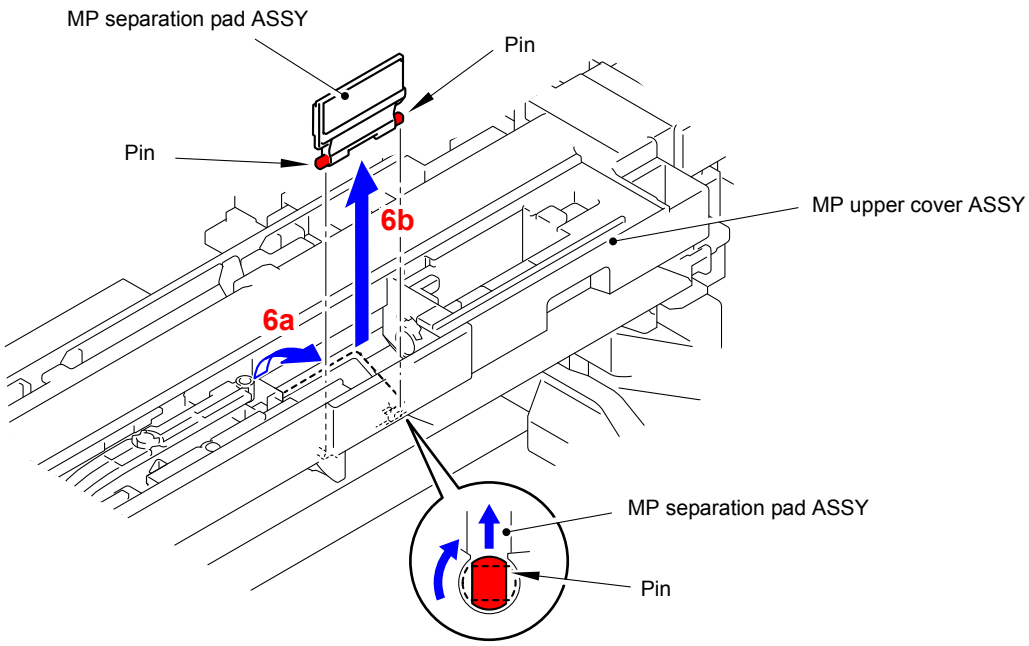

Fig. 7-56

(7) Remove the MP separation pad spring from the two Pins of MP upper cover ASSY.

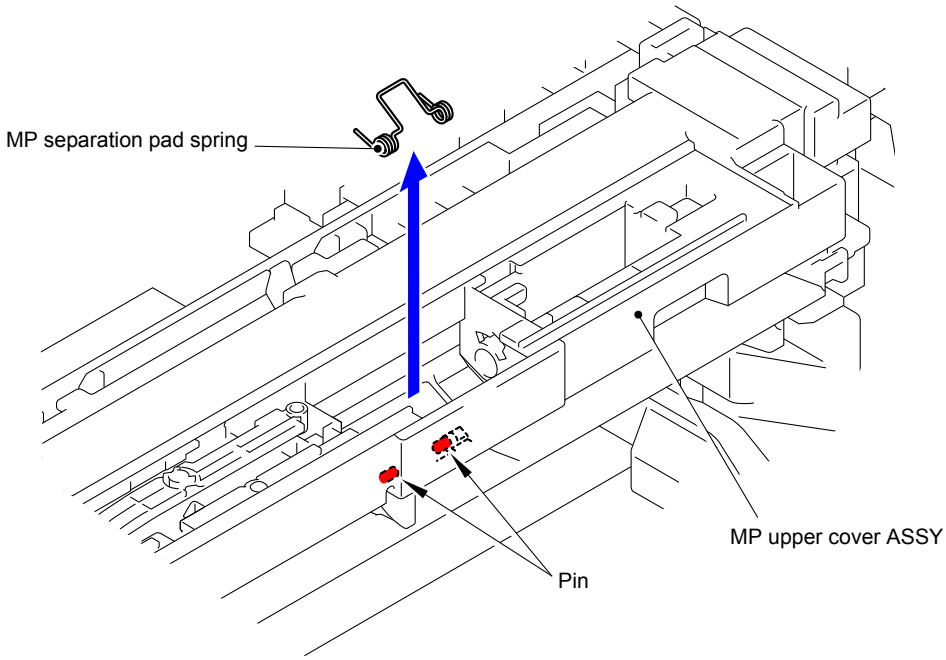

Fig. 7-57

(8) After replacing the PF kit MP, reset the counter.
(Refer to "1.3.29 Reset counters for parts (Function code 88)" in Chapter 5.)

APPENDIX 1 SERIAL NUMBERING SYSTEM

■ Serial number labels for the printer itself

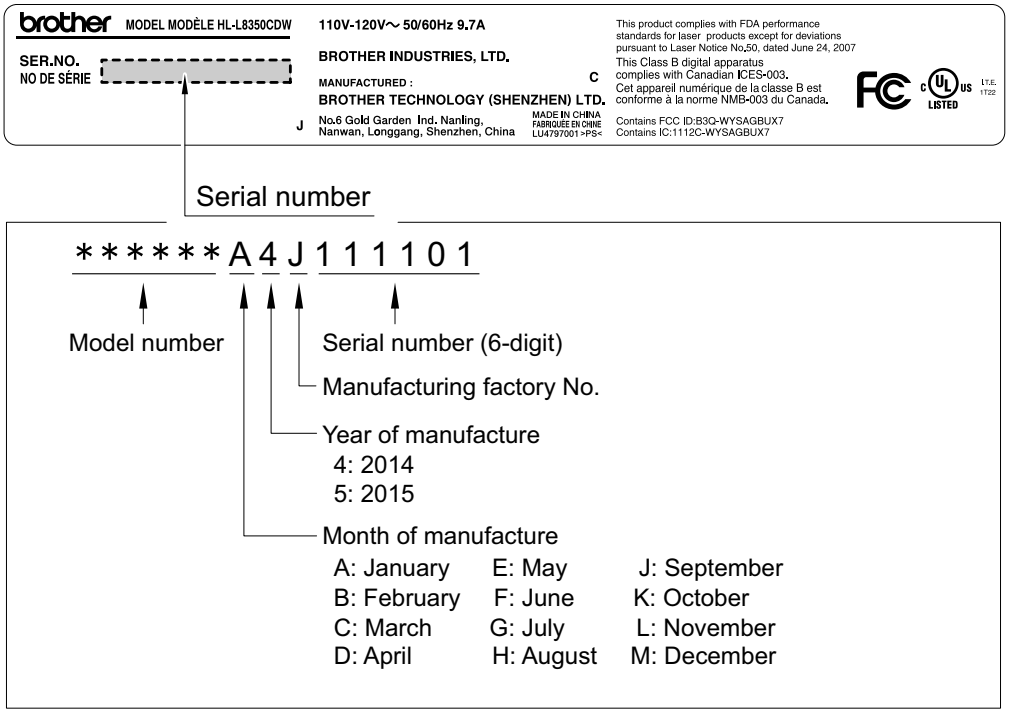

Fig. App 1-1

<Location>

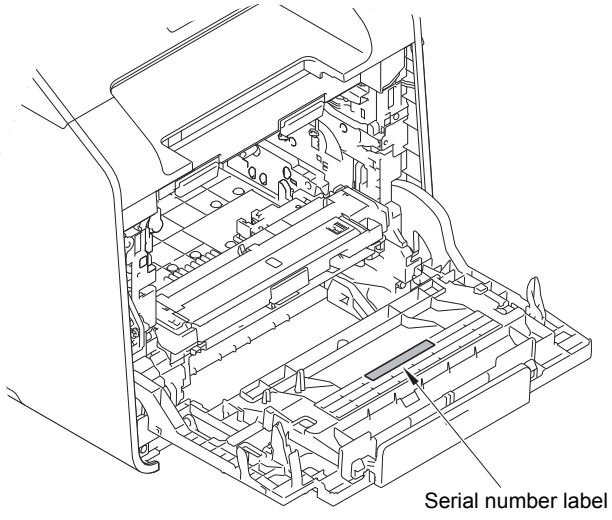

Fig. App 1-2

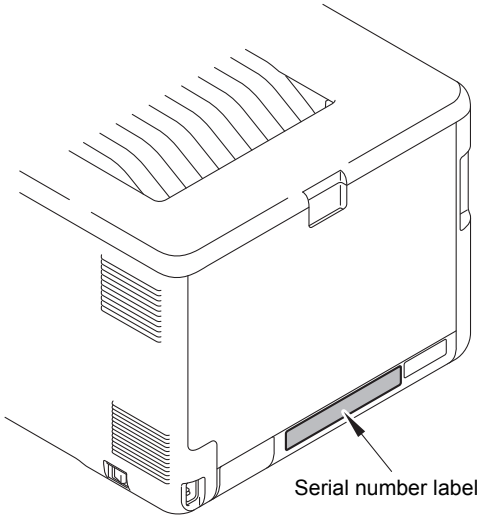

Fig. App 1-3

Confidential

APPENDIX 2 DELETION OF USER SETTING INFORMATION

In this machine, the user setting information is stored in the main PCB. The following procedure allows the factory default settings to be restored in the machine.

<Operating procedure>

Model without touch panel

(1) Press the ▲ or ▼ key to display "Reset Menu" on the LCD, and press the **OK** key while the machine is in the ready state.

(2) Press the ▲ or ▼ key to display "Factory Reset" on the LCD, and press the **OK** key.

(3) Press the ▲ key to select "Reset". Then, the user setting information is deleted, and the machine returns to the ready state automatically.

Model with touch panel

(1) Press the **Settings** key while the machine is in the ready state.

(2) Press the ∧ or ∨ key to display **Reset Menu** key on the LCD, and press the **Reset Menu** key.

(3) Press **Factory reset** key on the LCD. Then, "Factory Reset? It may take time to complete." is displayed.

(4) Press the **Yes** key. "Reboot OK? Press [Yes] for 2 seconds to confirm" is displayed on the LCD.

(5) Hold down the **Yes** key for two seconds or longer. Then, the user setting information is deleted, and the machine returns to the ready state automatically.

Confidential

APPENDIX 3 INSTALLING THE MAINTENANCE PRINTER DRIVER

To identify machines connected via USB direct interface, the computer requires the corresponding driver for the virtual USB device. If you connect any number of machines to your computer, the same number of virtual USB devices will be automatically configured on your computer. To prevent many virtual USB devices from being configured, use the unique driver installation procedure described below that enables your computer to identify terminals via one single virtual USB device.

Note:

- Once this installation procedure is carried out for a computer, no more driver/software installation will be required for that computer to identify machines. If the Brother Maintenance USB Printer driver has been already installed to your computer according to this procedure, skip this section.
- Before proceeding to the procedure given below, make sure that the Brother Maintenance USB Printer driver is stored in your computer.

■ Windows XP

(1) Check that the power switch of the machine is turned OFF. Disconnect the USB cable that connects the machine with your computer.

(2) Turn ON your computer.

(3) Turn ON the power switch of the machine.

(4) Enter the maintenance mode.
(Refer to “1.1 How to Enter the Maintenance Mode” in Chapter 5.)

(5) Connect the machine to your computer using a USB cable.
The following window appears.

(6) The following screen appears, indicating the detection of new hardware device by the system. Select “No, not this time.” And click [Next].

Confidential

(7) Select “Install the software automatically (Recommended)” and click [Next].

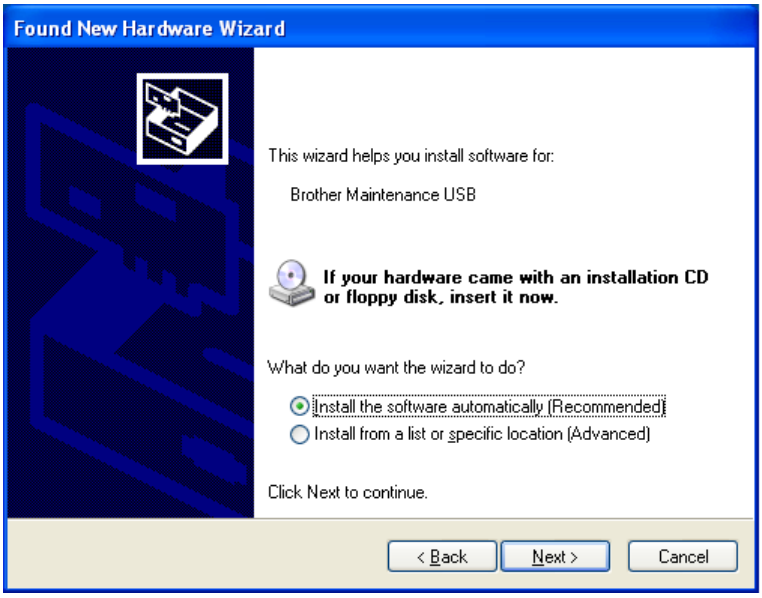

(8) Alert warning message of WHQL appears. Click [Continue Anyway] to proceed.

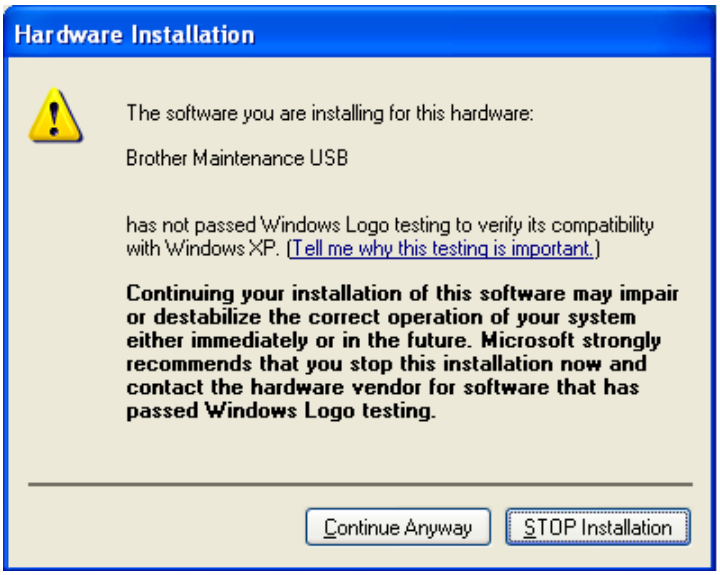

Confidential

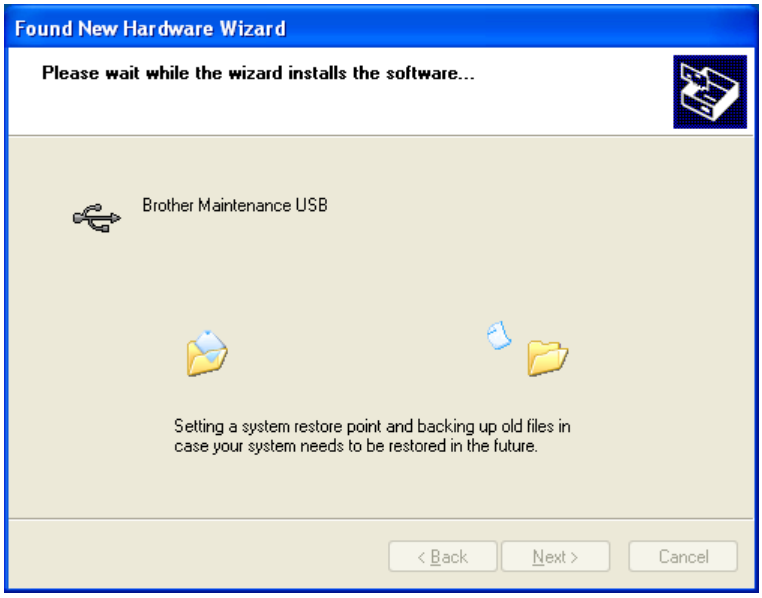

(9) Repeat steps (6) to (8) three times. Installation is completed.

(10) If the Brother Maintenance USB Printer driver is successfully installed, the following message screen appears. Click [Finish] to return.

Confidential

Note:

In order to check whether the printer driver is successfully installed, click [Start], [Settings], [Printers] to select the Printers window. Then, check that the Brother Maintenance USB Printer icon is shown.

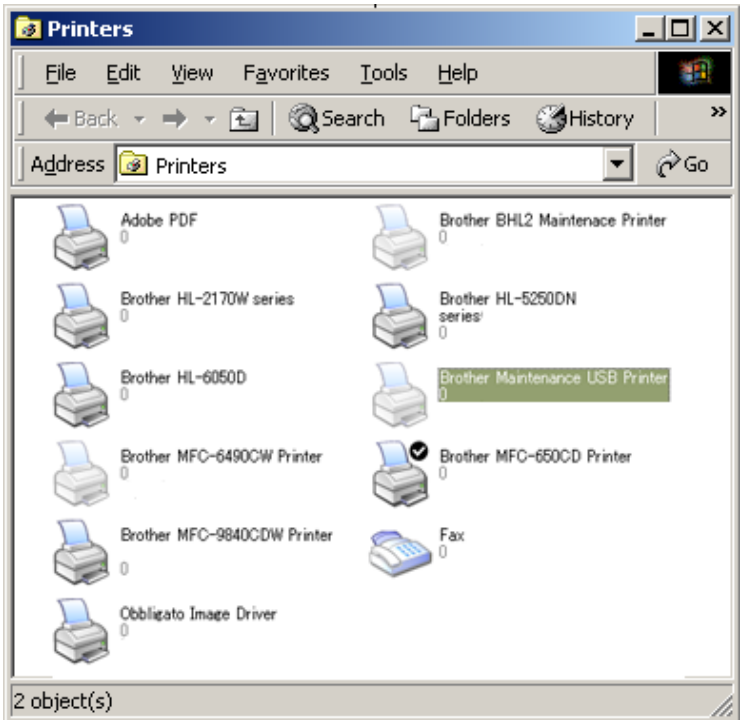

Confidential

■ Windows Vista/Windows 7/Windows 8/Windows 8.1

(1) Check that the power cord of the machine is unplugged from the electrical outlet. Disconnect the USB cable that connects the machine with your computer.

(2) Turn ON your computer.

(3) Double-click Setup.exe inside the Brother Maintenance USB Printer folder that was saved in a temporary folder. The following screen appears. Click the [Next] button.

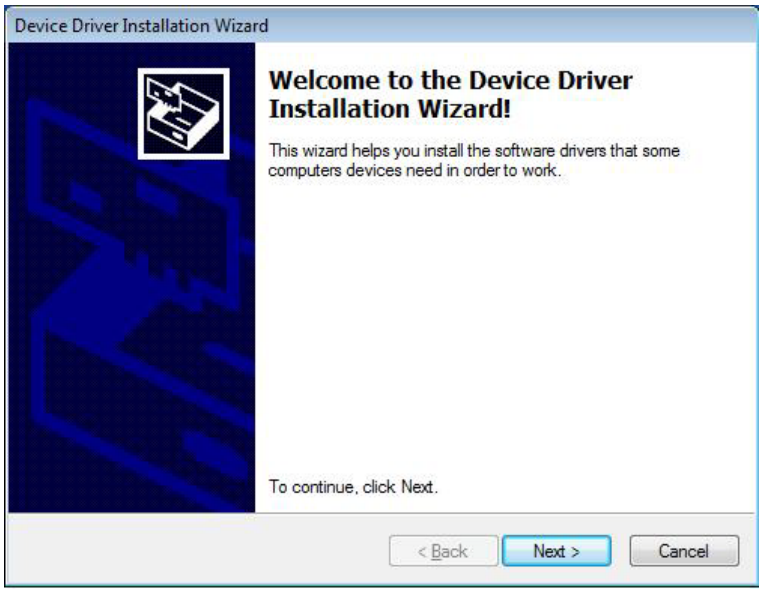

The following screen is displayed during installation.

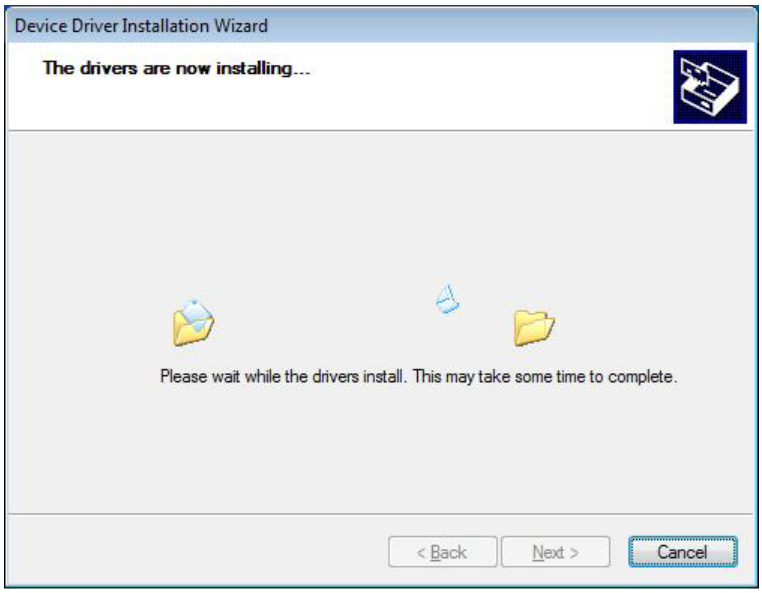

Confidential

(4) Wait for the following screen to appear and click [Finish].

(5) Plug the power cord of the machine into an electrical outlet.

(6) Enter the maintenance mode.
(Refer to “1.1 How to Enter the Maintenance Mode” in Chapter 5.)

(7) Connect the machine to your computer using a USB cable and the installation will be performed automatically.